Dist	COUNTY	ROUTE	POST MILES TOTAL PROJECT	SHEET No.	TOTAL SHEETS
04	Sol	37.80	10.6/11.2,4.0/4.9		

REGISTERED CIVIL ENGINEER — DATE: 6-28-24

JUNE 28, 2024
PLANS APPROVAL DATE

REGISTERED PROFESSIONAL ENGINEER — CARL H. GIBSON III — No. C63399 — Exp. 9-30-26 — CIVIL — STATE OF CALIFORNIA

THE STATE OF CALIFORNIA OR ITS OFFICERS OR AGENTS SHALL NOT BE RESPONSIBLE FOR THE ACCURACY OR COMPLETENESS OF SCANNED COPIES OF THIS PLAN SHEET.

WMH CORPORATION
11070 WHITE ROCK RD
SUITE 140
RANCHO CORDOVA
CA 95670

SOLANO TRANSPORTATION AUTHORITY
1 HARBOR CENTER
SUITE 130
SUISUN CITY, CA 94585

NOTES:

1. FOR ACCURATE RIGHT OF WAY DATA, CONTACT RIGHT OF WAY ENGINEERING AT THE DISTRICT OFFICE.
2. CONSTRUCT DRAINAGE PIPES, MAINTAIN AT LEAST 1 LANE OF TRAFFIC AT ALL TIMES.
3. AS FIRST ORDER OF WORK, CONSTRUCT CURB RAMP. SEE DETAILS.

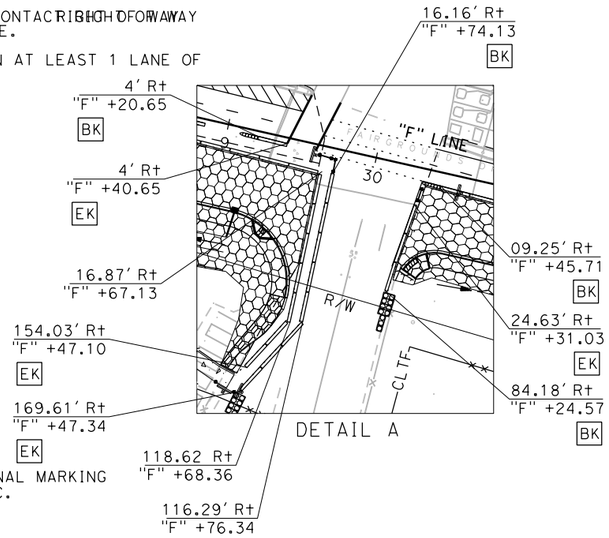

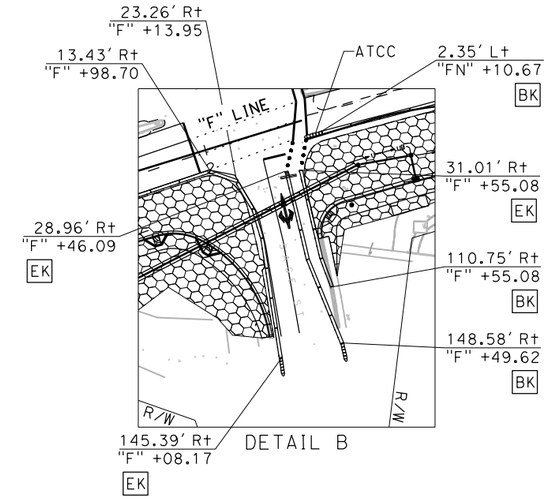

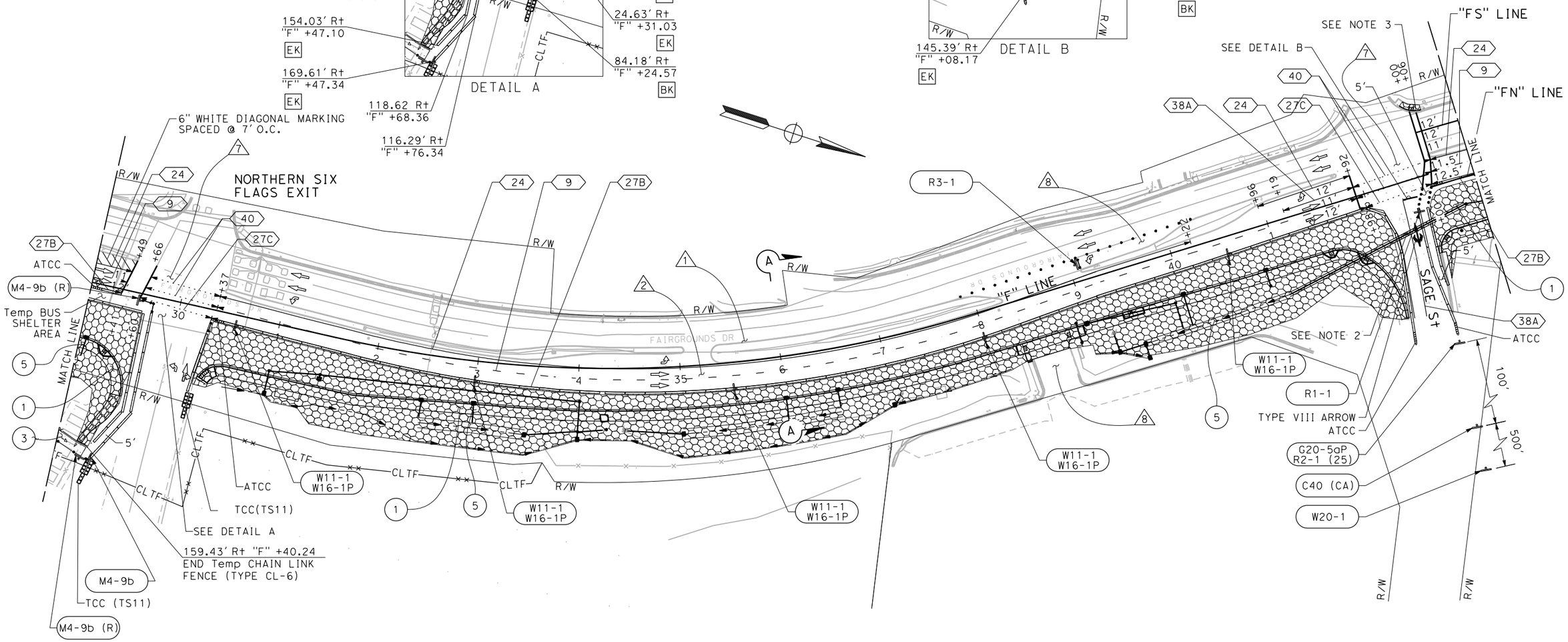

FOR NOTES, ABBREVIATIONS AND LEGEND, SEE SHEET SC-1

APPROVED FOR STAGE CONSTRUCTION WORK ONLY

STAGE CONSTRUCTION AND TRAFFIC HANDLING PLAN STAGE 1

SCALE: 1" = 50'

SC-3

R.L.	02/15/22	RALEIGH LANGSTON	CARL GIBSON III
REVISED BY	DATE REVISED	CALCULATED-DESIGNED BY	CHECKED BY

CONSULTANT FUNCTIONAL SUPERVISOR: CARL GIBSON III

STATE OF CALIFORNIA - DEPARTMENT OF TRANSPORTATION — Caltrans

X:\SR 37_FAIRGROUNDS DRIVE\000_CAD\Sheets\023-Stg_Const\MA-Plans\Stage 1\044A4414ma003.dgn

LAST REVISION 00-00-00 — DATE PLOTTED => 8/22/2024 — TIME PLOTTED => 12:04:20 PM

BORDER LAST REVISED 7/2/2010 | USERNAME => twasikhongo | DGN FILE => 044A4414ma003.dgn | RELATIVE BORDER SCALE IS IN INCHES 0 1 2 3 | UNIT 0738 | PROJECT NUMBER & PHASE 04000205841