Solano Transportation Authority
. . . working for you!

SOLANO TRANSPORTATION AUTHORITY

Member Agencies:
Benicia ♦ Dixon ♦ Fairfield ♦ Rio Vista ♦ Suisun City ♦ Vacaville ♦ Vallejo ♦ Solano County

423 Main Street, Suisun City, CA 94585-2413 ♦ Telephone (707) 424-6075 / Fax (707) 424-6074
Email: info@sta.ca.gov ♦ Website: sta.ca.gov

May 22, 2023

RE: Request for *Qualifications* (RFQ) #2023-08 for Interstate 80 (I-80) Westbound Cordelia Commercial Vehicle Enforcement Facility (WB I-80 CCVEF) Commercial Vehicle Management System (CVMS)

Dear Consultant:

The Solano Transportation Authority (STA) invites consultants to submit qualifications to conduct the ***WB I-80 CCVEF Commercial Vehicle Management System.***

To obtain a copy of the full Request for Qualifications (RFQ), please download the RFQ as a PDF file from the STA website: https://sta.ca.gov/work-with-sta/procurement-opportunities/ or call the STA at (707) 424-6075.

The RFQ describes the project, presents the requirements of the **Consultant** and outlines the criteria that will be used to evaluate the **Qualifications**.

Qualified organizations are invited to submit one (1) digital copy (CD or flash drive) of your Qualifications to the STA office no later than **4:00 PM PST** on **Monday, June 19, 2023** addressed to:

Attn: Nicholas Burton
Director of Projects
Solano Transportation Authority
423 Main Street
Suisun City, California 94585

Note that this deadline is firm and late submittals **will not** be accepted.

List of Attachments
Attachment A – WB I-80 CCVEF Fact Sheet
Attachment B – WB I-80 CCVEF Proposed Improvements Display
Attachment C – WB I-80 CCVEF Conceptual Technology Display
Attachment D – WB I-80 CCVEF 65% Electrical and Technology Plans
Attachment E – WB I-80 CCVEF CVMS Technology Deployment Description

---

The STA encourages, but does not require for this solicitation, the use of local firms. To assist in the use of local firms, the STA has prepared a database of contact information for local firms for convenience purposes only and without guarantees as to the ability of such firms to provide the services. This database and the Local Preference Policy can be viewed at: https://sta.ca.gov/operations/rfp-rfq-local-preference/

If you have questions regarding this project, please contact Sean Charles at (415) 601-1900 or by e-mail at scharles@wmhcorporation.com. Thank you for your interest.

Sincerely,

Daryl K. Halls
Executive Director

REQUEST FOR QUALIFICATIONS
(RFQ # 2023-08)

For

INTERSTATE 80 (I-80) WESTBOUND CORDELIA COMMERCIAL VEHICLE ENFORCEMENT FACILITY (WB I-80 CCVEF) COMMERCIAL VEHICLE MANAGEMENT SYSTEM (CVMS)

In
Solano County

Release Date: Monday, May 22, 2023

RESPONSES DUE:

4:00 PM PST, Monday, June 19, 2023
One (1) digital copy (electronic submittal) of each response

Solano Transportation Authority
423 Main Street
Suisun City, CA 94585

DISCLOSURE

The Solano Transportation Authority (STA) will retain full title to and ownership of all SOQ submissions made pursuant to this RFQ and shall be retained for official files and will become a public record after the award of a contract unless the qualifications or specific parts of the qualifications can be shown to be exempt by law (Government Code section 7921.000 et seq.). Each Responding Firm may clearly label part of a submittal as "CONFIDENTIAL" if the Responding Firm agrees to indemnify and defend the STA for honoring such a designation. The failure to so label any information that is released by the STA shall constitute a complete waiver of all claims for damages caused by any release of the information. If a public records request for labeled information is received by the STA, the STA will notify the Responding Firm of the request and delay access to the material until seven working days after notification to the Responding Firm. Within that time delay, it will be the duty of the Responding Firm to act in protection of its labeled information. Failure to so act shall constitute a complete waiver.

PROTEST AND APPEALS

Any actual or prospective bidder, offeror, or contractor who is aggrieved in connection with the Solicitations or Notice of Intent to Award a contract may protest to the Executive Director. The protest shall be submitted in writing to the Executive Director within seven (7) working days after such aggrieved person or company knows or should have known of the facts giving rise thereto. All letters of protest shall clearly identify the reasons for the protest. The protest also must state the law, rule, regulation, or policy upon which the protest is based. The Executive Director shall issue a written decision within ten (10) working days after receipt of the protest. The decision shall; state the reason for the action taken; and inform the protester that a request of further administrative appeal of an adverse decision must be submitted in writing to the Clerk of the STA Board of Directors within seven (7) working days after receipt of the decision by the Executive Director.

Table of Contents

List of Attachments

INTRODUCTION

The Solano Transportation Authority (STA) is a joint powers authority with members including the cities of Benicia, Dixon, Fairfield, Rio Vista, Suisun City, Vacaville, and Vallejo and the County of Solano. STA in partnership with the California Department of Transportation (Caltrans) and California Highway Patrol (CHP) presents this Request for Qualifications (RFQ) to prospective entities or groups of entities interested in the project to design, integrate and construct the technology systems for a new Interstate 80 (I-80) Westbound Cordelia Vehicle Enforcement Facility (WB-CCVEF[1]) in Solano County, California.

The WB I-80 CCVEF will replace the existing Cordelia Truck Scales along Westbound I-80, which was constructed in 1958 to inspect trucks entering the San Francisco Bay Area from locations nationwide. It currently accommodates between 500 and 700 trucks per day and consists of two dynamic scales, one static scale, four inspection bays, and limited parking. Existing access from I-80 consists of short on- and off-ramps, resulting in truck traffic backing up onto I-80 and increasing the potential for rear-end accidents. During peak traffic periods experienced several times per week, the facility is closed to incoming trucks to prevent this queuing.

The purpose of the WB I-80 CCVEF is to accommodate anticipated growth in truck traffic in the corridor by 2035, to provide traffic congestion relief along this segment of I-80, to improve safety by reducing truck and automobile weaving/queueing, and to improve the reliability of the system to enforce truck weight and safety requirements.

More specifically, the purpose of the WB I-80 CCVEF is to improve facility processing speed, throughput, reliability, and safety, and to reduce congestion, as follows:

- Improve facility processing speed: The new truck scales would be able to process up to 1,000 trucks per hour consistent with the projected volumes from the I-80 Cordelia Truck Scale Relocation Study, compared with the current 500 trucks per day.
- Improve throughput: With increased efficiency (speed) of truck processing, overall freight throughput would increase.
- Improve reliability: The new scales would improve goods movement reliability by processing trucks with more redundancy (weigh and inspection facilities) resulting in fewer unplanned closures of the facility. The Project would also improve overall system drive time reliability by reducing congestion and improving safety in a section of the regional highway corridor known for its unpredictable drive times.
- Improve safety: By reducing congestion and truck queueing and eliminating weaving between the SR 12 connector on-ramp and the CVEF off-ramp, the proposed Project would reduce collisions and improve highway safety in the area.
- Reduce congestion: Currently, extreme congestion in the corridor—significantly exacerbated by truck traffic—leads to regional trips diverting to local roadways within the project area. Conversely, congestion impedes vehicles making trips with local origins or destinations from accessing the system. The proposed project would reduce projected future congestion on I-80, making the regional freeway system more accessible for both regional through trips and regional trips with local origins or destinations.

[1] For clarity and brevity, STA has used the term "WB-CCVEF" to refer to the subject matter of this RFQ and the subsequent contemplated RFP. Proposers should note, however, that neither the issuance of this RFQ nor any action taken thereunder is an "approval" of a "project" as those terms are defined under CEQA. Until any necessary environmental reevaluation is complete, STA will take no action that would (i) have a significant adverse effect on the environment or (ii) limit STA's choice of alternatives or mitigation measures.

The Design of the of the WB I-80 CCVEF is underway, with STA having previously awarded the contract to WMH Corporation. Construction is utilizing the Construction Manager / General Contractor (CM/GC) innovative delivery method, with Caltrans having awarded the contract to Kiewit, and early design support activities have started. CM/GC is considered an accelerated project delivery method by the Federal Highway Administration (FHWA) because it allows overlapping design and construction periods that reduce overall project duration. CM/GC allowed the selection of a contractor early in the project development process. After award of the Preconstruction Services Contract, the CM/GC became a member of the Project Development Team, allowing them to provide input (e.g., risk, costs, schedule, and innovative construction methods) into important design decisions that help shape the Project.

In September 2022, the Board authorized the Executive Director to develop and issue an RFQ/RFP, for an amount not-to-exceed $6M, to provide the Technology System Integration (TSI-RFP) design, equipment procurement/installation, and maintenance for the new WB I-80 CCVEF.

This Commercial Vehicle Management System Integration design will provide for delivery of a highly efficient, operator friendly, and low maintenance facility. The new CVEF will reduce congestion in the corridor, improve freight throughput, and will achieve the CHP mission of Safe Commercial Vehicles by constructing a new larger facility and incorporating an integrated technology system. The integrated technology system is critical to the facility's function and purpose.

Like the EB I-80 CCVEF, the new WB I-80 CCVEF will be required to process up to 1000 commercial vehicles per hour through the four inspection lanes by 2035. In comparison, other major inspection facilities, such as the Northbound US Route 101 Truck Scales at Gilroy and Northbound I-5 Truck Scales at Cottonwood currently process approximately 300 commercial vehicles per hour through three inspection lanes. Even these lower volume truck scales facilities present a challenge directing vehicles to the correct lane, verifying they are in the correct lane, and visually detecting potential safety defects while weighting, directing, and tracking the commercial vehicles in the truck scales facilities. The new facility, with four inspection lanes and three times the commercial vehicle volume increases, raises the task to yet a higher level, and therefore will require an integrated technology system that will be one of the most advanced of its kind in the United States.

BACKGROUND

The WB I-80 CCVEF is a standalone effort with independent utility but also represents the second of two Projects relating to the replacement and relocation of two aging CVEFs in unincorporated Cordelia, California – eastbound and westbound on I-80, respectively. The WB I-80 CCVEF is listed as a top mega-regional priority by three MPOs: Metropolitan Transportation Commission (MTC), Sacramento Area Council of Governments (SACOG), and San Joaquin Council of Governments (SJCOG).

The STA, in partnership with Caltrans, CHP, and other stakeholders, began evaluating the limitations of the Cordelia facilities in 2001 with the *Truck Scale Data Collection and Analysis – Technical Memorandum*. In 2005 STA completed the *Cordelia Truck Scales Relocation Study* as part of a Project to reconfigure the I-80/I-680/SR12 Interchange. The relocation study identified the need to move and expand the scales to accommodate the anticipated 115 percent growth in traffic through the corridor expected by 2040. Through extensive analysis and community outreach, STA refined the design of the facilities and identified the optimal locations for the new sites.

In January 2008, a Proposition 1B – Trade Corridors Improvement Fund (TCIF) grant application was submitted to the California Transportation Commission (CTC) for the replacement and relocation of the eastbound I-80 CCVEF. Later that year, CTC approved the TCIF grant for capital construction funding and in July 2013 the new eastbound facility was officially opened for service. The replacement of the eastbound facility resulted in a 117 percent increase in inspections. The eastbound Project received the ITS America Best new innovative product, service or application and the Safety Project of the Year in 2014 for its transformative impacts. The WB I-80 CCVEF is expected to have an even greater impact on operations as it will deploy updated technology. SB1 funding has already been awarded to the westbound Project, as it received Trade Corridor Enhancement Program (TCEP) Cycle 2 funds for the Design phase of the Project and has submitted an application for Cycle 3 funds for the Construction phase.

The Project addresses the most pressing transportation challenges of the region by upgrading outdated technology, reducing greenhouse gas (GHG) emissions by lowering traffic congestion, adding emissions equipment testing and evaluation, and constructing a resilient and sustainable piece of core infrastructure. The new facility will allow the inspection of trucks of different sizes, weights, including different equipment and load sizes; as well as emissions equipment testing and evaluation.

Not only will the WB I-80 CCVEF modernize outdated and under-capacity infrastructure, it also provides capacity for future growth along the corridor. By 2035, westbound traffic within the Project limits is projected to increase by 33 percent from 96,681 in 2020 to 127,581 average daily traffic (ADT). Truck ADT could increase by over 33 percent from 36,672 to 48,393 during the same period (per I-80/I-680/SR 12 Interchange Traffic Operations Assessment Report (TOAR). Without this Project, the current scales will continue to underperform, limiting mobility and creating safety hazards.

The current truck scales at the westbound I-80 CCVEF are outdated, and as a result, the capacity of the facility to complete its purpose of ensuring truck and road safety is severely limited. The WB I-80 CCVEF will modernize this critical component of the Northern California transportation system. Upgraded truck screening technology will increase inspection capacity by over 3,000 percent. In doing so, the Project will improve infrastructure condition, reduce congestion, and increase economic vitality.

Faster inspection will result in shorter wait times and consequently fewer trucks idling along I-80, reducing traffic congestion and GHG emissions in the corridor. Traffic congestion is substantial in the Project area and corridor – leading to the adverse quality of life and environmental impacts. The scales technology will also allow for more thorough truck screening, which will improve the safety of the regional transportation system. Additionally, the Project will contribute to the resilience and environmental sustainability of the area by pursuing a net zero building design. Lastly, the implementation of electric vehicle charging infrastructure at the new site will facilitate zero emission truck use and contribute to California's efforts to move towards a zero-emission transportation industry.

WB I-80 CCVEF IMPROVEMENTS

The WB I-80 CCVEF project will rebuild the westbound I-80 Cordelia Truck Scales approximately 0.7 miles to the east of the current location with a larger truck inspection facility with more capacity and improved ramp access to and from the freeway. The Project will construct two new off-ramps to the WB I-80 CCVEF: one directly from I-80 and one from the SR 12 connector ramp, providing improved operations at the westbound SR 12/I-80 connector. The new CCVEF, capable of processing up to 1000

vehicles per hour, will operate 24 hours per day, seven days per week, will sort trucks at near highway speeds, and will provide for increased vehicle inspections. The Project will implement advanced and innovative techniques replacing old technology with state-of-the-art equipment that provides for faster inspection of commercial vehicles, significantly increasing the CCVEF's capacity and enhancing the safety compliance of trucks along the corridor.

The new truck scales facility will be relocated 0.7 mile east from its current location and will provide a new braided off-ramp connection and new entrance ramp connection to/from Westbound I-80. Direct access to the facility will also be provided from westbound State Route 12 (East). The new facility will have the capacity to inspect all westbound I-80 trucks passing the facility 24 hours per day, seven days a week, with eight covered inspection areas to accommodate long vehicle combinations, elevated structures to enable inspectors to check the domes and top portions of cargo trucks, "Weigh In Motion" scales with the capability to sort truck traffic into the appropriate lane along the approach roadway, and a minimum of four sets of scales to accommodate two lanes of empty and loaded trucks.

WB I-80 CCVEF Site

The design of the WB I-80 CCVEF has been developed in close coordination with CHP and Caltrans DES Architecture and incorporates the latest requirements for CVEF operations. The WB I-80 CCVEF will utilize state-of-the-art technology to prescreen all trucks—enabling inspectors and officers to focus their attention on trucks most likely to have safety violations.

Mainline Improvements

The Project includes off- and on-ramps that provide simplified direct access to and from the new CVEF while eliminating queueing onto I-80, which currently occurs on a regular basis. The on-ramp design reduces congestion and conflicts between trucks re-entering I-80 and drivers exiting westbound I-80 towards southbound I-680.

Freeway-to-Freeway Improvements

Direct off-ramps to the I-80 Westbound CCVEF will reduce the truck volumes within the westbound SR 12E connector and improve weaving/differential speeds. The design realigns and widens the westbound SR 12E connection to I-80 to three lanes to provide standard connector geometry.

Interchange Improvements

The on-ramp from Abernathy Road to westbound I-80 will be eliminated. Caltrans determined the existing on-ramp from Abernathy Road has low traffic volumes, and an alternate route for traffic exists via the SR 12/Chadbourne Road interchange on-ramp, which immediately merges onto westbound I-80. Local traffic would be directed to westbound I-80 via the SR 12/Chadbourne Road interchange.

Commercial Vehicle Management System

For the purposes of this RFQ, Commercial Vehicle Management System (CVMS) is defined as the technology to consolidate the screening, sorting, and routing of commercial vehicles into a user interface that focuses inspection and enforcement efforts on vehicles with the worst potential condition. Details of the CVMS are provided in *Attachment C – WB I-80 CCVEF Conceptual Technology Display*, *Attachment D – WB I-80 CCVEF 65% Electrical and Technology Plans*, and *Attachment E – WB I-80 CCVEF CVMS Technology Deployment Description*.

PROCUREMENT APPROACH

Because of the technological complexity of this project, this system procurement warrants a more focused solicitation process. Successful system implementation will require a technology integrator that can provide a solution that is innovative, sustainable and resilient. This RFQ solicitation is global in search and includes an invitation to all qualified Firms/Teams with backgrounds that may include related and relevant services including commercial vehicle enforcement, tolling operations and any other operation involving high accuracy vehicle identification, data processing, weighing, automation, etc.

STA recognizes that there are relatively few system integrators operating around the world that can handle a deployment of this complexity and often times they are hesitant to pursue projects in regions/states/countries where other Firms/Teams have a strong 'foothold'. The Firms/Team borne costs (research, design, demonstrations, etc.) to pursue a project of this magnitude without foreknowledge that STA is willing to evaluate all proposals equally (regardless of previous Firm/Team-client history), could potentially inhibit the number of viable responses. To ensure that the STA will have the opportunity to evaluate proven technologies and proven approaches to address the goals and objectives of the Cordelia CVEF from a wide pool of respondents, the STA team has developed a focused four-step RFQ/RFP process.

1. Implementing outreach that incorporates a demonstrated message that STA is open to reviewing all qualified Firms/Teams regardless of any previous relationship(s) with California agencies.
2. Engaging, inviting, and evaluating qualifications submissions (including references) and selecting no more than the top four most qualified Firms/Teams to proceed to the proposal phase.
3. Implementing a proposal phase with the selected firms (to be identified in step two above) which will include submission of a 30% or more completed set of plans (detailed concept of operations) providing a clear understanding of the Firm/Team's solution.
4. Evaluation of the '30% Plans' and selection of the most qualified firm, **with (up to) the three non-selected Firms/Teams being partially reimbursed to offset proposal expense for development of their 35% Plans**.

By taking this action (financial support to offset proposal costs) to increase the number of qualified Firm/Team submissions, STA stands to benefit by having a wider variety of 'out of the box' solutions from which to choose, that might otherwise have never been submitted for consideration. Those Firms/Teams who successfully reach the RFP phase but are not ultimately selected will be eligible for partial reimbursement for proposal preparation of up to **$30,000 USD** upon invoice review and approval. More detailed reimbursement information will be provided with the RFP information given to those Firms/Teams selected in step two above.

DISADVANTAGED BUSINESS ENTERPRISE (DBE) AND DISADVANTAGED VETERAN BUSINESS ENTERPRISE (DVBE) UTILIZATION

The STA encourages the utilization of registered disadvantaged and disadvantaged veteran businesses which can be found at https://sta.ca.gov/work-with-sta/procurement-opportunities/. Utilization of registered DBEs and DVBEs is not required for this project but remains desirable.

LOCAL PREFERENCE POLICY

The STA has adopted a Local Preference Policy which encourages the hiring of local firms. While there is no adopted goal for this Project, firms are still encouraged to utilize the services of local firms in the preparation of a response to this RFQ. The STA has prepared a database of contact information for local firms for convenience purposes only and without guarantees as to the ability of such firms to provide the services. This database and the Local Preference Policy can be viewed at https://sta.ca.gov/operations/rfp-rfq-local-preference/.

CVMS PHASES

The STA intends to retain a qualified and committed professional Firm/Team to planning, data collection, and analysis firm to develop these components:

Phase 1: Request for Qualifications

See *RFQ SUBMITTAL REQUIREMENTS* below.

Phase 2: Request for Proposal

Selected firms will be invited for a Request for Proposal process, including submission of a 30% or more completed set of plans(1) providing a clear understanding of the Firm/Team's solution. STA selects the top Firm/Team and will negotiate a Best and Final Offer (BAFO) Contract(2).

Note 1: 30% Plans should include appropriate drawings to lay out the major design elements of the project and verify the project's scope, schedule, and budget.

Note 2: BAFO will include a minimum 5-Year replacement warranty on all equipment, software, and services and no license fees will be included.

Phase 3: CVMS Integration Design

The top Firm/Team will work with WMH Corporation to verify/validate the conceptual technology design and explore appropriate innovative solutions to meet the CCVEF's Goals described above. Any proposed changes to the 65%PS&E for the CCVEF infrastructure will be coordinated with the CM/GC Team and incorporated into the 95% PS&E (Currently scheduled for October 2023).

The CVMS Firm/Team will then develop their final design, with input from Caltrans and CHP on the user interfaces, and provide a final package for STA approval. Final design will include agreed acceptance test criteria and timelines, as well as a User Training Plan and associated materials.

Upon approval of their Design, the CVMS Firm/Team will begin procurement and system manufacturing.

Phase 4: CVMS Installation and Acceptance

Once Construction has progressed to the point of the infrastructure being ready for installation (Currently scheduled for Fall 2025), the CVMS Firm/Team will coordinate installation of their equipment with the CM/GC Team and perform User Training.

Upon completion of their installations, the CVMS Firm/Team will perform acceptance testing and submit their acceptance test report for STA approval.

Phase 5: CVMS Maintenance Period

Upon approval of their Acceptance Test, the CVMS Firm/Team will provide 6-months of System Maintenance.

Phase 6: CVMS Optional Maintenance Period(s)

Upon request, the CVMS Firm/Team will provide up to an additional 4-years and 6-months of System Maintenance.

INSTRUCTION TO PROPOSER

1. *Examination of Proposal Documents*: By submitting a proposal, the proposer represents that it has thoroughly examined and become familiar with the work required under this RFQ, and that it is capable of performing the work identified in Scope of Work.

2. *Addenda/Clarifications*: Explanations or clarifications desired by respondents regarding the meaning or interpretation of the RFQ may be requested verbally or in writing. All inquiries pertaining to this RFQ should be emailed to Sean Charles, at scharles@wmhcorporation.com no later than **4:00 PM PST, June 7, 2023**. Response to all questions submitted by the deadline that may have a material impact on the proposal will be posted on the STA website at www.sta.ca.gov by **June 12, 2023**. The subject line for questions submitted in writing should include reference to: "Questions - STA RFQ # 2023-08".

3. *Withdrawal of Proposal Submittal*: A proposer may withdraw its proposal at any time before the expiration of the time for submission of proposal submittals as provided in this RFQ by delivering to the procurement officer a written request for withdrawal signed by, or on behalf of, the proposer.

4. *Rights of STA*: This RFQ does not commit STA to enter into a contract, nor does it obligate STA to pay for any costs incurred in preparation and submission of the proposal or in anticipation of a contract. STA may investigate the qualifications of any proposer under consideration, require confirmation of information furnished by the proposer, and require additional evidence or qualifications to perform the services described in this RFQ.

   STA, in its sole discretion, reserves the right to:
   - Reject any or all proposal submittals.
   - Issue one or more subsequent RFQs and/or RFPs.
   - Postpone opening for its own convenience.
   - Remedy technical errors in the RFQ and/or RFP process.
   - Approve or disapprove the use of particular subcontractors.
   - Negotiate with any, all, or none of the proposers responding to this RFQ.
   - Solicit best and final offers from all or some of the proposers.
   - Award a contract to one or more proposers.
   - Waive informalities and irregularities in any proposal.

RFQ SUBMITTAL REQUIRMENTS

Submissions must include information that will demonstrate the Firm/Team's ability to complete the work described in Section One. There is no page limit imposed on the RFQ submission but direct relevance, brevity and conciseness are expected. Completeness of submission should include clarity, readability and presentation of material. To facilitate printing, electronic **submissions must be prepared on 8 ½ " x 11" sized sheets**. 11" x 17" pages are allowed for schematics, organizational charts, other drawings and schedules but not for narrative text. All pages will be sequentially numbered within each volume. Font sizes will be no smaller than 12-point font. The font in organizational charts, graphics and tables may be smaller than 12-point provided it is legible.

Transmittal Letter

The qualifications shall be transmitted with a cover letter describing the firm's/team's interest and commitment to the proposed project. The letter shall state that the qualifications shall be valid for a 90-day period and should include the name, title, address and telephone number of the individual to whom correspondence and other contacts should be directed during the selection process. The person authorized by the firm/team to negotiate a contract with STA shall sign the cover letter.

Address the cover letter as follows:

Nicholas Burton
Director of Projects
Solano Transportation Authority
423 Main Street
Suisun City, California 94585

Executive Summary

Proposer shall provide an Executive Summary, in the form of a narrative which should:

1. be written in a non-technical style; and
2. contain sufficient information for reviewers with both technical and non-technical backgrounds to become familiar with the key points of Proposer's SOQ.

Project Understanding

This Section should provide basic qualifications information regarding the project. This information will be used to determine the Firm/Team's understanding of the complexity of the project as well as their capabilities and resources. Documentation should include, but is not limited to the following items:

- An understanding of the services required
- Approach to providing the services required
- Brief narrative describing the respondent's understanding of the project's central issues

Firm/Team Qualifications and Experience

Proposer shall provide a narrative detailing the prior experience of Proposer and the team's Major Participants, emphasizing experience that is directly relevant to Proposer's vision and technical approach for the Project. Narrative should include, but is not limited to the following items:

- Firm resources/capability to accomplish proposed work on schedule
- This should include all team members, lead and team members' company histories, project references (verifiable), solvency, contact information and other information described in subsequent sections.
- Reference project experience on five (5) similar projects completed within the last 10 years. Indicate key personnel involvement on the reference projects
- Location(s) where work will be initiated from (to include subcontractor/subconsultant locations, if applicable)
- Business presence and/or experience in the greater Bay Area Region, including Solano County
- Resumes for all team member key personnel (include as attachment to SOQ). Summaries of key staff resumes should be provided in the main SOQ narrative
- Identify who the proposed project manager will be and from what office location the project will be managed
- The location, size, and description of the firm

- Evidence of financial stability to support project deployment and five years of maintenance support
- Project Organization Chart identifying key personnel and anticipated team assignments
- Sub-contractor usage if anticipated. Indicate the percentage of work estimated to be performed by the sub vs. the prime. Also, indicate if the prime Firm has previously worked with the proposed sub and give a brief example of the previous relationship(s)

Innovation and Quality

Proposer shall provide a narrative detailing their commitment to innovation and describing their process for ensuring quality in project delivery, testing, and maintenance.

Previous Project References

Proposer shall include references for work performed on five projects that were active (Design, Installation, Testing, or Maintenance) within the past five years. These references will be verified. Reference materials should include, but are not limited to the following items:

- Project description
- Project location(s)
- Contact information for all project references (name(s), phone, email, address)
- Size of contract for each reference project (Contract amount for Firm performed work)
- Project durations for Design, Installation, Testing, and Maintenance periods, as applicable

SELECTION CRITERIA

The qualifications will be evaluated and scored on a 100-point total basis using the following criteria:

1. Project Understanding (30 Points)
2. Firm/Team Qualifications and Experience, including demonstrated past performance on projects of similar size and complexity and experience in the greater Bay Area Region (25 Points)
3. Demonstrated commitment to innovation and ensuring quality in project delivery (25 Points)
4. Satisfaction of previous clients (20 Points)

SELECTION SCHEDULE

STA anticipates carrying out the procurement process in accordance with the following schedule. This Procurement Schedule is subject to modification at the discretion of STA. Proposers will be notified of any change by an Addendum to the RFQ or, following identification of Shortlisted firms, in the RFP.

May 22, 2023	RFQ Issued
June 5, 2023	Project Overview Presentation: Detailed (1 hour) presentation and Q&A session is given online and recorded. Attendance is strongly recommended for anyone submitting a qualifications package. Recording can be viewed by any interested parties up until the final Firm/Team is selected. All questions concerning the RFQ need to be submitted to scharles@wmhcorporation.com **no later than June 7, 2023 at 4:00 PST.**
June 12, 2023	All questions and answers will be posted on the STA website.
June 19, 2023	Electronic submittal of **RFQ Proposals are due no later than 4:00 PM PST**. ***Late submittals will not be accepted*.**
June 26, 2023	STA selects up to 4 Firms/Teams with acceptable qualifications. RFP is sent to selected Firms/Teams and preproposal One-On-One Meetings are scheduled.
Week of July 6th	One-On-One Meetings held with the Firms/Teams that were selected to participate in the RFP Process.
July 24,2023	Electronic submittal of **RFP Proposals are due no later than 4:00 PM PST**. ***Late submittals will not be accepted*.**
Week of August 1st	Interviews held with the selected Firms/Teams.
August 7, 2023	STA selects top Firm/Team and negotiates a Best and Final Offer (BAFO) Contract.

If you have any questions regarding this RFQ, please contact:

Sean Charles
Senior Project Manager
Phone (415) 601-1900
Email: scharles@wmhcorporation.com

Project Schedule

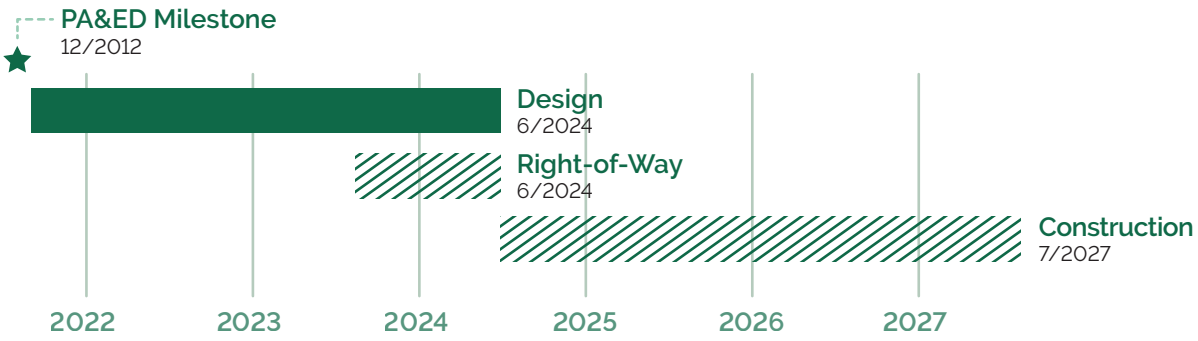

Funding

	Local Match	STIP	TCEP	Total
Design		$5.3 M*	$24.0 M*	**$29.3 M***
Construction	$67.9 M		$75.5 M	**$143.4 M**
Right-of-Way	$12.1 M		$13.3 M	**$25.4 M**
TCEP Cycle 3 Request	**$80.0 M**		**$88.8 M**	**$168.8 M**
Project Totals	**$80.0 M**	**$5.3 M**	**$112.8 M**	**$198.8 M**

* Previously allocated

Scan the QR code to watch an informational video on the Solano I-80 Westbound Truck Scales Project.

Contact

For more information on the I-80 Westbound Truck Scales Project, please contact:

Nicholas Burton
Director of Projects
nburton@sta.ca.gov
(707) 424-6075

Solano Transportation Authority

Solano I-80 Westbound Truck Scales Project

Laying the Foundation for a Clean Freight Network

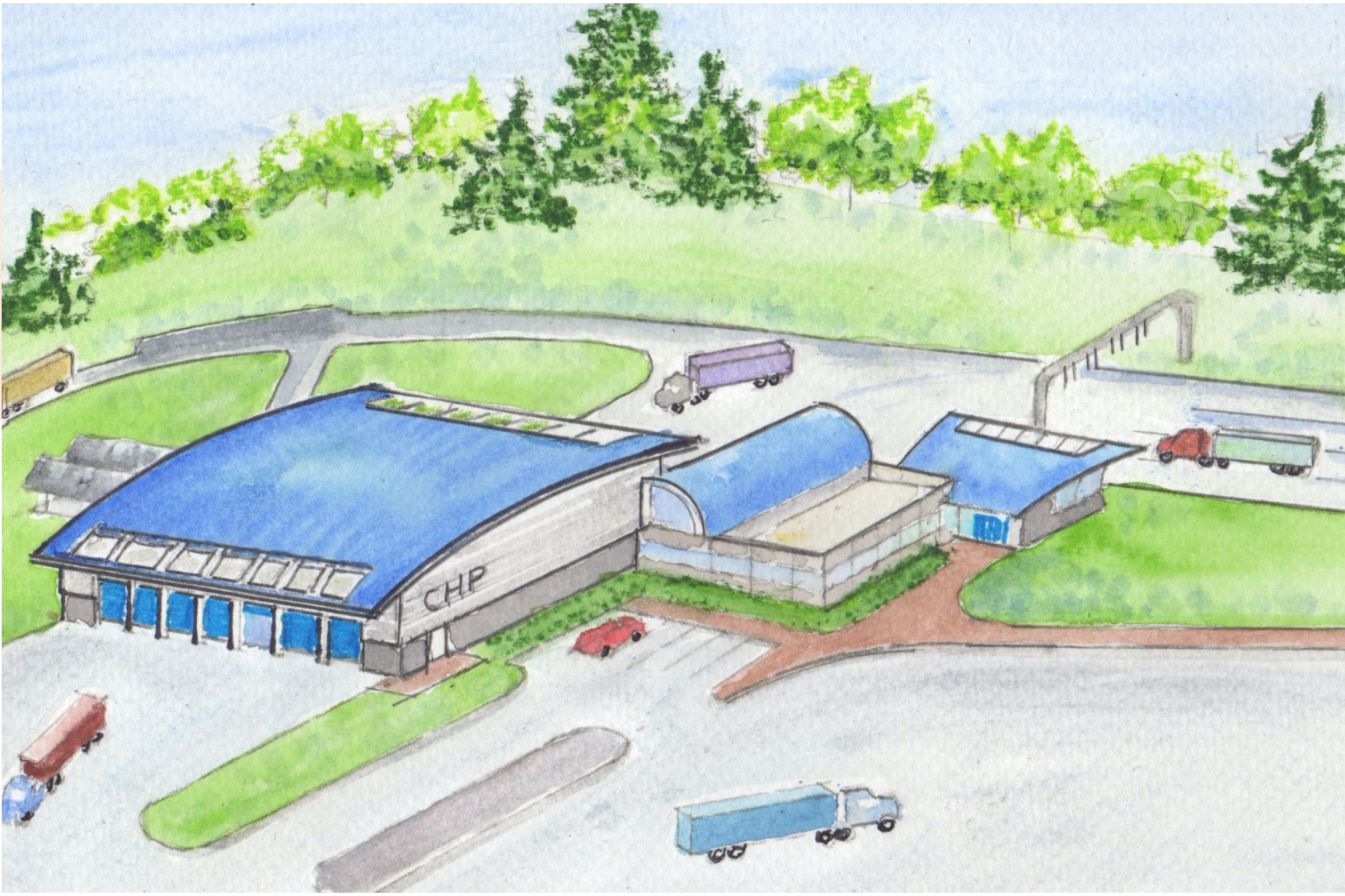

projectwebsiteURL.com

Project Overview

Solano Transportation Authority and Caltrans have proposed building a new state-of-the-art Westbound Truck Scales facility along I-80, between Fairfield and Cordelia. This innovative project will modernize and relocate the existing, aging Westbound Truck Scales. Once completed, the new facility will lay the foundation for a regional clean freight network and unlock economic growth by decongesting this crucial trade corridor. With the Eastbound Truck Scales already updated in 2012, a blueprint showcasing the innumerable positive impacts of a twenty-first century facility lies just across the interstate.

Project Area

Purpose and Need

The existing Westbound Truck Scales facility is over 60 years old and **lacks the capacity to safely and efficiently accommodate inspection of the rapidly increasing number of trucks** travelling along this stretch of I-80.

Westbound Issues:

- Outdated inspection technology
- Short entrance/exit ramps
- Long truck queues
- Difficult inspection conditions

These issues result in:

- Incomplete or no inspection of trucks
- Unsafe traffic conditions
- Poor traffic flow
- Higher GHG emissions

Proposed Westbound Truck Scales Improvements:

- Longer entrance/exit ramps
- Increased number of inspection lanes
- State-of-the-art inspection technology
- Large inspection garage with seven bays
- Safe inspection bay design
- Electric vehicle charging stations

These improvements will **dramatically enhance the regional flow of goods and significantly reduce the environmental impact** of freight transport.

Existing Westbound Truck Scales

Updated Eastbound Truck Scales

Project Benefits

- Accommodate up to **1000 trucks an hour** (currently 500-700 trucks a day)
- Significantly **shorten** average length of **inspection**
- **Improve travel times** for both trucks and general motorists
- **Decrease congestion** at truck scale entrance/exits
- **Reduce rear-end collisions** along I-80
- Support an estimated **$1 billion** in regional economic impacts, including **5,700 new jobs**
- **Advance California's climate goals** by reducing GHG emissions and adding electric vehicle charging

Project Site Layout

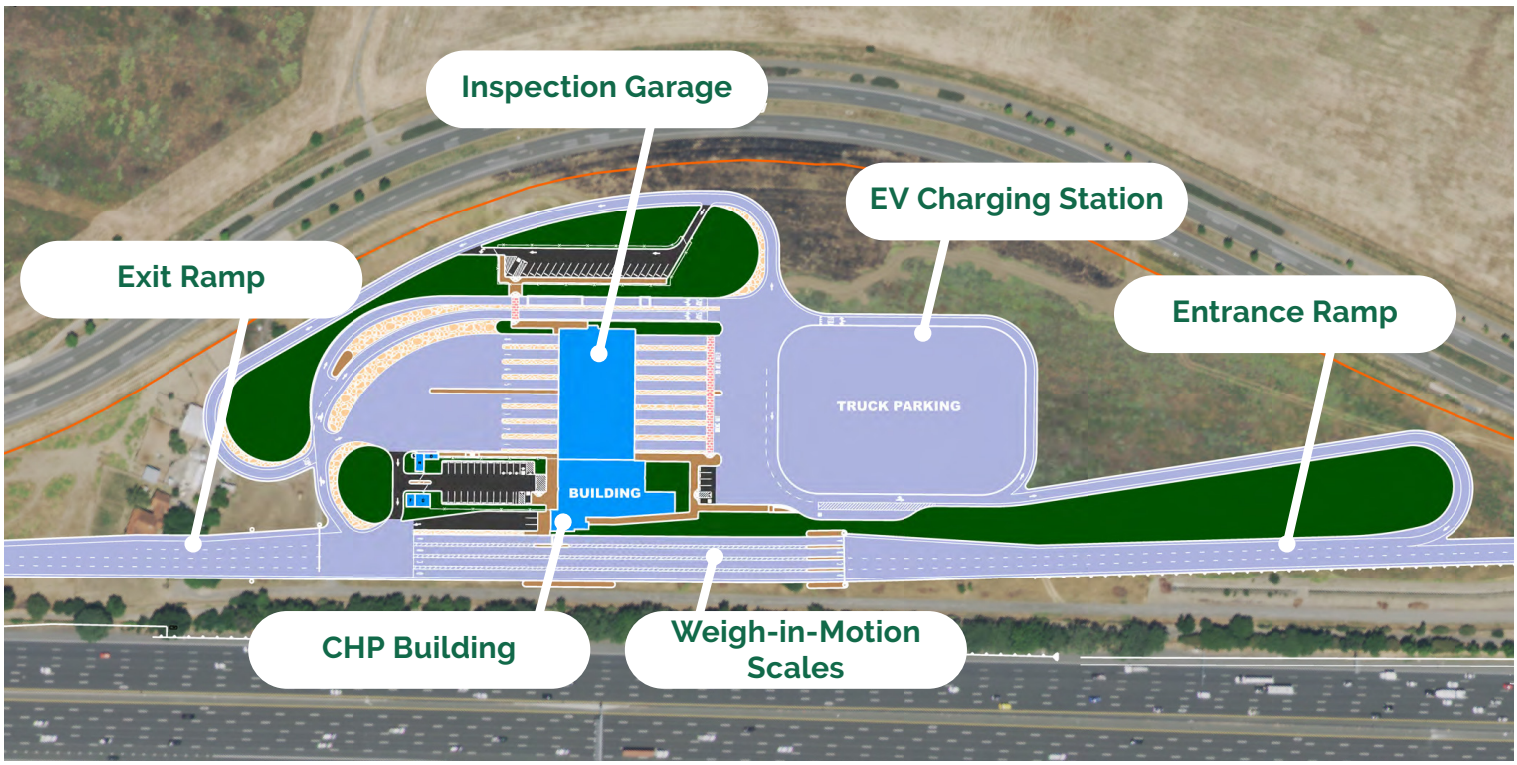

Connecting the Megaregion

Westbound I-80 traffic is projected to increase by 33% to 127,581 average daily trips (48,393 trucks) by 2035. If left unaddressed, the outdated Westbound Truck Scales facility will inhibit regional goods movement as the **I-80 East Corridor connects three major ports and several warehouses and freight networks**.

Sustainability Spotlight

Ensuring the proposed Westbound Truck Scales met environmental standards was integral to the design process. Green infrastructure improvements include:

- Electric vehicle charging stations
- Certified LEED Silver CHP building
- Anticipated Zero Net Energy facility
- Reduced GHG emissions resulting from less congestion and truck idling
- Improved regional air quality

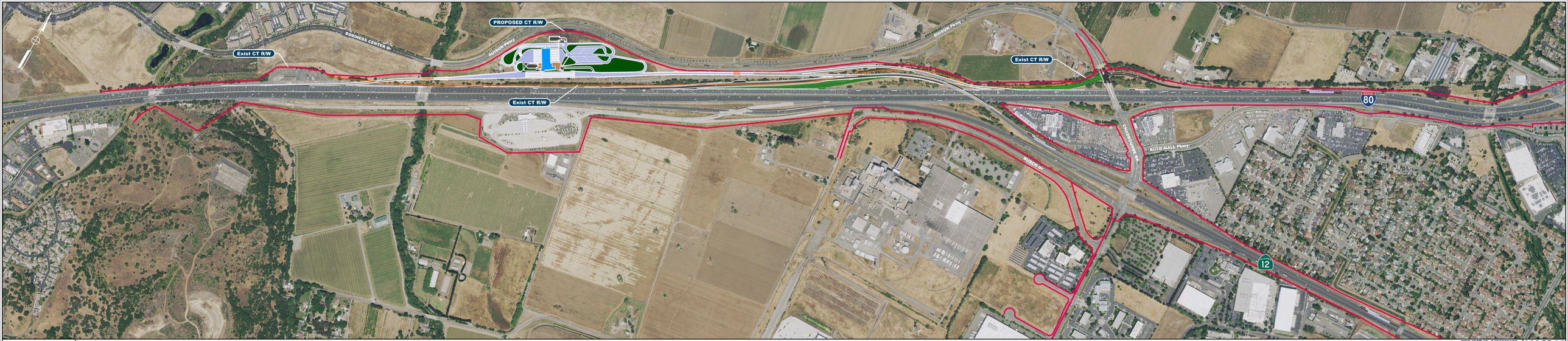

STA CHP Caltrans

WB ROUTE 80 CCVEF
PROJECT OVERVIEW

PROJECT ID: 0421000155
EA: 0A53T
SCALE: 1"=400'
FEBRUARY 2023

WMH CORPORATION

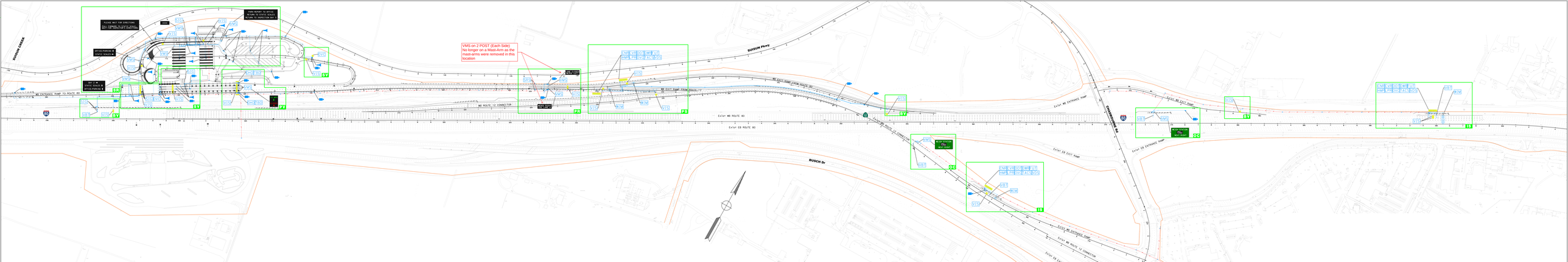

WB ROUTE 80 CCVEF - PROPOSED TECHNOLOGY LAYOUT

TECHNOLOGY LEGEND:

- PROPOSED TECHNOLOGY
- TECHNOLOGY JOINT TRENCH (POWER/COMM)
- LARGE VAULT/SMALL VAULT
- TECHNOLOGY HUB
- PA SYSTEM
- CCTV CAMERA
- ELECTRIC LOOPS
- SIG — SIGNAL HEAD
- SRS — SPEED RADAR SYSTEM
- VMS — VARIABLE MESSAGE SIGN
- CNR — CA NUMBER READER (FURNISHED AND INSTALLED BY OTHERS)
- CVR — CVSA DECAL READER (FURNISHED AND INSTALLED BY OTHERS)
- DOT — DOT NUMBER READER (FURNISHED AND INSTALLED BY OTHERS)
- DWR — DECLARED WEIGHT DECAL READER (FURNISHED AND INSTALLED BY OTHERS)
- FUT — FUTURE TECHNOLOGY (FURNISHED AND INSTALLED BY OTHERS)
- HMP — HAZ-MAT PLACARD READER (FURNISHED AND INSTALLED BY OTHERS)
- LPR — LICENSE PLATE READER (FURNISHED AND INSTALLED BY OTHERS)
- OHD — OVER-HEIGHT DETECTOR (FURNISHED AND INSTALLED BY OTHERS)
- OVC — OVERVIEW CAMERA (FURNISHED AND INSTALLED BY OTHERS)
- TACS — TIRE ANOMALY AND CLASSIFICATION SYSTEM (FURNISHED AND INSTALLED BY OTHERS)
- TBD — THERMAL BRAKE DETECTOR (FURNISHED AND INSTALLED BY OTHERS)
- VBT — PrePass/Drivewyze VENDOR BYPASS TECHNOLOGY
- VDS — VEHICLE DIMENSION SCANNER (FURNISHED AND INSTALLED BY OTHERS)
- VIS — VEHICLE IDENTIFICATION/RE-IDENTIFICATION SYSTEM (FURNISHED AND INSTALLED BY OTHERS)
- WIM — WEIGH-IN-MOTION SYSTEM

TECHNOLOGY LOCATIONS LEGEND:

- **IS** INITIAL SCREENING
- **OC** OPEN/CLOSED
- **PS** PRIMARY SCREENING
- **PR** PRIMARY ROUTING
- **PV** PRIMARY VERIFICATION
- **SV** SECONDARY VERIFICATION
- **SR** SECONDARY ROUTING
- **BV** BYPASS VERIFICATION

PROJECT NO 1010100.00
DATE 10/2021
DRAWN BY WMH

DIST.	COUNTY	ROUTE	POST MILES TOTAL PROJECT	SHEET NO.	TOTAL SHEETS
04	Sol	12,80	L1.8/L3.2, 13.4/17.2		

REGISTERED CIVIL ENGINEER DATE

REGISTERED PROFESSIONAL ENGINEER No. Exp. CIVIL STATE OF CALIFORNIA

PLANS APPROVAL DATE

The State of California or its officers or agents shall not be responsible for the accuracy or completeness of electronic copies of this plan sheet.

WMH CORPORATION
11070 White Rock Rd,
Suite 140
Rancho Cordova, CA 95670

SOLANO TRANSPORTATION AUTHORITY
423 Main Street,
SUISUN CITY, CA 94585

ABBREVIATIONS

C	CONDUIT
(E)	EXISTING
ELEC	ELECTRIC, ELECTRICAL
EL	ELECTRIC LOOPS
ES	ELECTRICAL SERVICE
FUT	FUTURE
FOPB	FIBER OPTIC PULLBOX
GRS	GALVANIZED RIGID STEEL
HCC	HYBRID CAMERA CABLE
HH	HANDHOLE
HOA	HAND-OFF-AUTOMATIC
JT	JOINT TRENCH
KVAR	KILOVOLT AMPERES REACTIVE
KW	KILOWATTS
KWH	KILOWATT HOURS
LV	LARGE VAULT
MAX	MAXIMUM
MCC	MOTOR CONTROL CENTER
MCP	MOTOR CIRCUIT PROTECTOR
MFR	MANUFACTURER
MH	MANHOLE
MIN	MINIMUM
MISC	MISCELLANEOUS
MOV	MOTOR OPERATED VALVE
MS	MOTOR STARTER
MTD	MOUNTED
MTS	MANUAL TRANSFER SWITCH
(N)	NEW
NEC	NATIONAL ELECTRICAL CODE
NEMA	NATIONAL ELECTRICAL MANUFACTURER'S ASSOCIATION
NIC	NOT IN CONTRACT
OH	OVERHEAD
PNLBD	PANELBOARD
PVC	POLYVINYL CHLORIDE CONDUIT
PWR	POWER
RCPT	RECEPTACLE
RM	ROOM
SCADA	SUPERVISORY CONTROL AND DATA ACQUISTION
SH	SIGNAL HANDHOLE
SPD	SURGE PROTECTION DEVICE
SW	SWITCH
SWBD	SWITCHBOARD
TH	TECHNOLOGY HUB CABINET
TP	TECHNOLOGY POLE
TSP	TWISTED SHIELDED PAIR
TYP	TYPICAL
UG	UNDERGROUND
UON	UNLESS OTHERWISE NOTED
V	VOLTS
VA	VOLT-AMPERES
VAV	VARIABLE AIR VOLUME
VFD	VARIABLE FREQUENCY DRIVE
VH	VAR-HOUR
VS	VOLTMETER SWITCH
W	WIRE, WATTS
WHM	WATTHOUR METER
WHDM	WATTHOUR DEMAND METER
WP	WEATHERPROOF
XFMR	TRANSFORMER

NOTES

1. ALL EQUIPMENT INCLUDING CONDUIT, VALUTS AND PULLBOXES IS SHOWN IN APPROXIMATE LOCATIONS ONLY. PROPOSED FINAL LOCATIONS ARE TO BE APPROVED IN THE FIELD. THE CONTRACTOR SHALL GIVE AT LEAST 48 HOURS NOTICE FOR APPROVAL OF PROPOSED EQUIPMENT LOCATIONS.
2. THE INSTALLATION OF ALL EQUIPMENT SHOWN ON THESE DRAWINGS OR DESCRIBED IN THE SPECIFICATIONS SHALL CONFORM TO THE REQUIREMENTS SET FORTH IN THE LATEST EDITIONS OF ALL APPLICABLE CODES AND UTILITY COMPANY STANDARDS. CONTACT THE UTILITY COMPANY REPRESENTATIVES AND VERIFY THEIR REQUIREMENTS.
3. NOTIFY THE ENGINEER IMMEDIATELY IF CONFLICTS IN EQUIPMENT LOCATIONS ARE DISCOVERED OR IF PROBLEMS ARISE DUE TO FIELD CONDITIONS, LACK OF INFORMATION OR ANY OTHER REASON. NO PAYMENT WILL BE MADE FOR CHANGES WHICH HAVE NOT BEEN FAVORABLY REVIEWED BY THE ENGINEER.
4. VERIFY ALL COLOR REQUIREMENTS BEFORE ORDERING MATERIALS.
5. PROVIDE 3/16 INCH NYLON PULL ROPE IN EACH EMPTY CONDUIT.
6. LARGE VAULTS AND FIBER OPTIC PULL BOXES ARE SPACED AT EVERY 300' (MAXIMUM).
7. PULL BOXES ARE SPACED AT EVERY 200' (MAXIMUM).
8. 4-4"C, PVC, (EMPTY) (INSTALLATION DETAILS PER PG&E GREEN BOOK).
9. 2-4"C, PVC, (EMPTY) (INSTALLATION DETAILS PER PG&E GREEN BOOK).
10. 2-5"C, PVC, (EMPTY) (INSTALLATION DETAILS PER PG&E GREEN BOOK).

PLAN SYMBOLS

- CNR — CA NUMBER READER (FURNISHED AND INSTALLED BY OTHERS)
- CVR — CVSA DECAL READER (FURNISHED AND INSTALLED BY OTHERS)
- DOT — DOT NUMBER READER (FURNISHED AND INSTALLED BY OTHERS)
- DWR — DECLARED WEIGHT DECAL READER (FURNISHED AND INSTALLED BY OTHERS)
- FUT — FUTURE TECHNOLOGY (FURNISHED AND INSTALLED BY OTHERS)
- HMP — HAZ-MAT PLACARD READER (FURNISHED AND INSTALLED BY OTHERS)
- LPR — LICENSE PLATE READER (FURNISHED AND INSTALLED BY OTHERS)
- OHD — OVER-HEIGHT DETECTOR (FURNISHED AND INSTALLED BY OTHERS)
- OVC — OVERVIEW CAMERA (FURNISHED AND INSTALLED BY OTHERS)
- SIG — SIGNAL HEAD
- SRS — SPEED RADAR SYSTEM
- TACS — TIRE ANOMALY AND CLASSIFICATION SYSTEM (FURNISHED AND INSTALLED BY OTHERS)
- TBD — THERMAL BRAKE DETECTOR (FURNISHED AND INSTALLED BY OTHERS)
- VBT — PrePass/Drivewyze VENDOR BYPASS TECHNOLOGY
- VDS — VEHICLE DIMENSION SCANNER (FURNISHED AND INSTALLED BY OTHERS)
- VIS — VEHICLE IDENTIFICATION/RE-IDENTIFICATION SYSTEM (FURNISHED AND INSTALLED BY OTHERS)
- VMS — VARIABLE MESSAGE SIGN
- WIM — WEIGH-IN-MOTION SYSTEM
- EV1 — SINGLE PORT LEVEL 2 ELECTRIC VEHICLE CHARGING STATION
- EV2 — DOUBLE PORT LEVEL 2 ELECTRIC VEHICLE CHARGING STATION
- EV3 — SINGLE PORT LEVEL 3 ELECTRIC VEHICLE CHARGING STATION
- (L) — LARGE VAULT (TYPE L)
- TECHNOLOGY HUB CABINET (FURNISHED AND INSTALLED BY OTHERS)
- PA SPEAKER
- CCTV CAMERA (PTZ)
- CCTV CAMERA (FIXED)
- ELECTRIC LOOPS (EL)
- ELECTRIC SERVICE CABINET TYPE 1
- ELECTRIC SERVICE CABINET TYPE 2
- PULL BOX No. 5 TRAFFIC RATED UNLESS OTHERWISE INDICATED

	BY	CHECKED
DESIGN	PARAS BATTH	SEAN CHARLES
DETAILS		
QUANTITIES		

PREPARED FOR THE STATE OF CALIFORNIA DEPARTMENT OF TRANSPORTATION

DIVISION OF ENGINEERING SERVICES
ARCHITECTURAL AND STRUCTURAL DESIGN

BRIDGE NO. 23W0001L
POST MILE 14.8

WESTBOUND CORDELIA CVEF

ELECTRICAL SITE
ABBREVIATIONS AND SYMBOLS

SHEET **EE8-00**

0421000155wj0800.dgn
DOES SD imperial Rev.1/07 5/11/2023 1:44:51 PM

ORIGINAL SCALE IN INCHES FOR REDUCED PLANS 0 1 2 3

CU 0711
EA 0A53T1

DISREGARD PRINTS BEARING EARLIER REVISION DATES → 04/03/23

REVISION DATES (PRELIMINARY STAGE ONLY) SHEET OF

5/11/2023 1:44:51 PM

0421000155wj0800.dgn

DIST.	COUNTY	ROUTE	POST MILES TOTAL PROJECT	SHEET NO.	TOTAL SHEETS
04	Sol	12,80	L1.8/L3.2, 13.4/17.2		

REGISTERED CIVIL ENGINEER DATE

REGISTERED PROFESSIONAL ENGINEER
No.
Exp.
CIVIL
STATE OF CALIFORNIA

PLANS APPROVAL DATE

The State of California or its officers or agents shall not be responsible for the accuracy or completeness of electronic copies of this plan sheet.

WMH CORPORATION
11070 White Rock Rd,
Suite 140
Rancho Cordova, CA 95670

SOLANO TRANSPORTATION AUTHORITY
423 Main Street,
SUISUN CITY, CA 94585

NOTE:

FOR ACCURATE RIGHT OF WAY DATA, CONTACT RIGHT OF WAY ENGINEERING AT THE DISTRICT OFFICE.

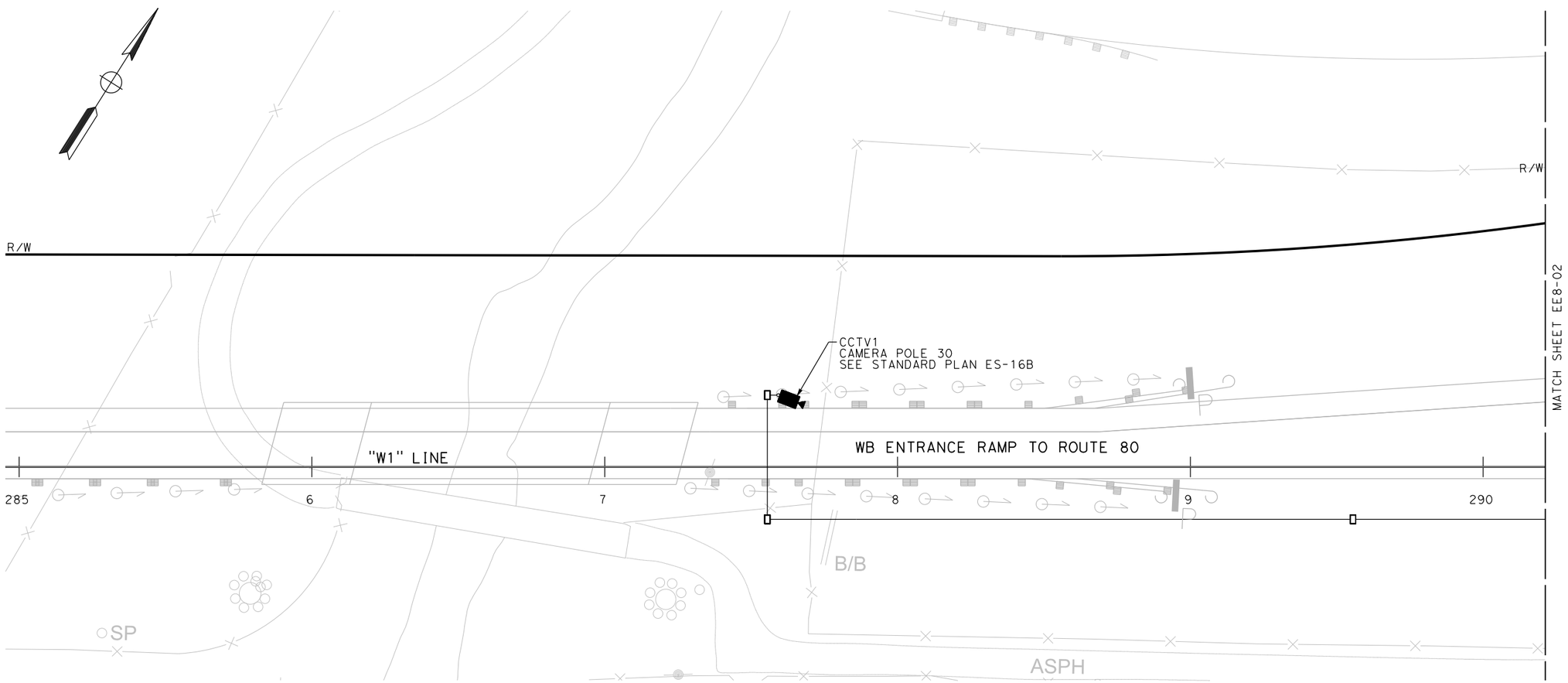

FOR NOTES, ABBREVIATIONS AND LEGEND, SEE SHEET EE8-0

SCALE: 1" = 20'

	BY	CHECKED
DESIGN	PARAS BATTH	SEAN CHARLES
DETAILS		
QUANTITIES		

PREPARED FOR THE STATE OF CALIFORNIA DEPARTMENT OF TRANSPORTATION

DIVISION OF ENGINEERING SERVICES
ARCHITECTURAL AND STRUCTURAL DESIGN

CU 0711
EA 0A53T1

BRIDGE NO. 23W0001L
POST MILE 14.8

WESTBOUND CORDELIA CVEF

ELECTRICAL SITE PLAN No. 1

SHEET **EE8-01**

0421000155wj0801.dgn
DOES SD imperial Rev.1/07 5/11/2023 1:45:05 PM

ORIGINAL SCALE IN INCHES FOR REDUCED PLANS 0 1 2 3

DISREGARD PRINTS BEARING EARLIER REVISION DATES → 04/03/23

REVISION DATES (PRELIMINARY STAGE ONLY) SHEET OF

5/11/2023 1:45:05 PM

0421000155wj0801.dgn

DIST.	COUNTY	ROUTE	POST MILES TOTAL PROJECT	SHEET NO.	TOTAL SHEETS
04	Sol	12,80	L1.8/L3.2, 13.4/17.2		

REGISTERED CIVIL ENGINEER DATE

REGISTERED PROFESSIONAL ENGINEER
No.
Exp.
CIVIL
STATE OF CALIFORNIA

PLANS APPROVAL DATE

The State of California or its officers or agents shall not be responsible for the accuracy or completeness of electronic copies of this plan sheet.

WMH CORPORATION 11070 White Rock Rd, Suite 140 Rancho Cordova, CA 95670	SOLANO TRANSPORTATION AUTHORITY 423 Main Street, SUISUN CITY, CA 94585

NOTE:

FOR ACCURATE RIGHT OF WAY DATA, CONTACT RIGHT OF WAY ENGINEERING AT THE DISTRICT OFFICE.

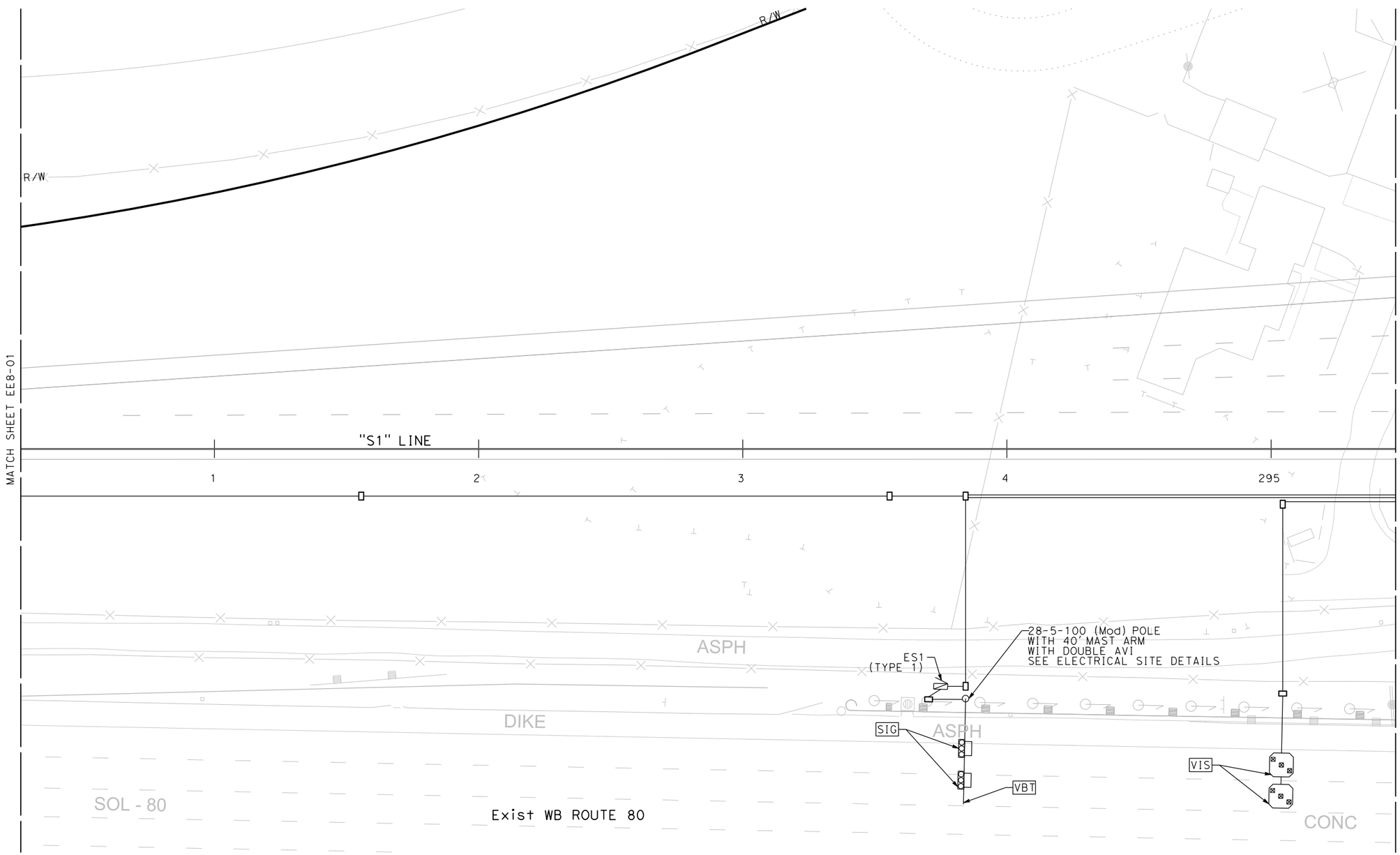

FOR NOTES, ABBREVIATIONS AND LEGEND, SEE SHEET EE8-0

SCALE: 1" = 20'

	BY	CHECKED
DESIGN	PARAS BATTH	SEAN CHARLES
DETAILS	BY	CHECKED
QUANTITIES	BY	CHECKED

PREPARED FOR THE STATE OF CALIFORNIA DEPARTMENT OF TRANSPORTATION

DIVISION OF ENGINEERING SERVICES
ARCHITECTURAL AND STRUCTURAL DESIGN

BRIDGE NO. 23W0001L
POST MILE 14.8

WESTBOUND CORDELIA CVEF

ELECTRICAL SITE PLAN No. 2

SHEET **EE8-02**

0421000155wj0802.dgn
DOES SD imperial Rev.1/07 5/11/2023 1:45:10 PM

ORIGINAL SCALE IN INCHES FOR REDUCED PLANS 0 1 2 3

CU 0711
EA 0A53T1

DISREGARD PRINTS BEARING EARLIER REVISION DATES → 04/03/23

REVISION DATES (PRELIMINARY STAGE ONLY) SHEET OF

5/11/2023 1:45:10 PM

0421000155wj0802.dgn

DIST.	COUNTY	ROUTE	POST MILES TOTAL PROJECT	SHEET NO.	TOTAL SHEETS
04	Sol	12,80	L1.8/L3.2, 13.4/17.2		

REGISTERED CIVIL ENGINEER DATE

REGISTERED PROFESSIONAL ENGINEER No. Exp. CIVIL STATE OF CALIFORNIA

PLANS APPROVAL DATE

The State of California or its officers or agents shall not be responsible for the accuracy or completeness of electronic copies of this plan sheet.

WMH CORPORATION
11070 White Rock Rd,
Suite 140
Rancho Cordova, CA 95670

SOLANO TRANSPORTATION AUTHORITY
423 Main Street,
SUISUN CITY, CA 94585

NOTE:

FOR ACCURATE RIGHT OF WAY DATA, CONTACT RIGHT OF WAY ENGINEERING AT THE DISTRICT OFFICE.

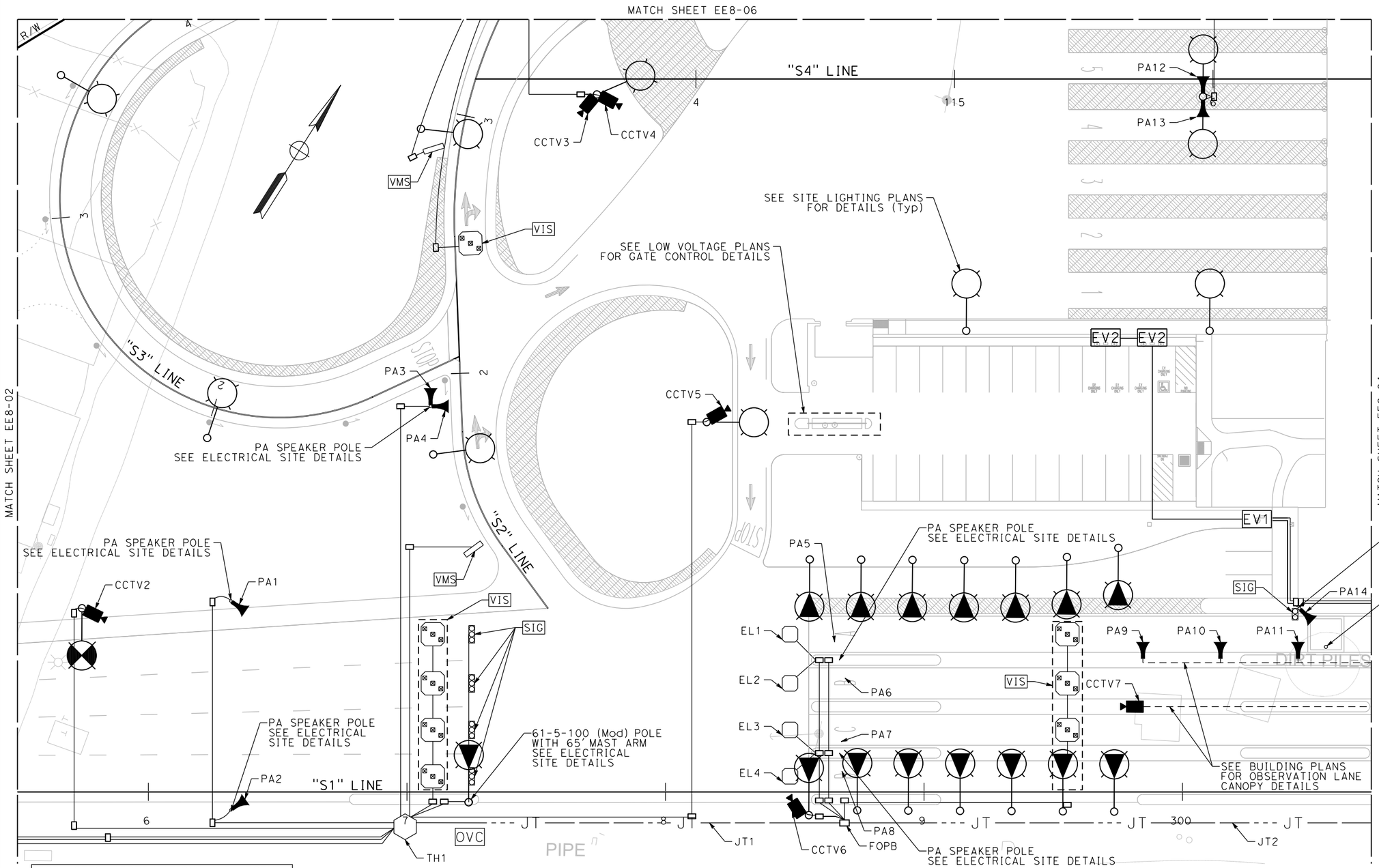

FOR NOTES, ABBREVIATIONS AND LEGEND, SEE SHEET EE8-0

SCALE: 1" = 20'

	BY	CHECKED
DESIGN	PARAS BATTH	SEAN CHARLES
DETAILS		
QUANTITIES		

PREPARED FOR THE STATE OF CALIFORNIA DEPARTMENT OF TRANSPORTATION

DIVISION OF ENGINEERING SERVICES
ARCHITECTURAL AND STRUCTURAL DESIGN

BRIDGE NO. 23W0001L
POST MILE 14.8

WESTBOUND CORDELIA CVEF

ELECTRICAL SITE PLAN No. 3

SHEET **EE8-03**

0421000155wj0803.dgn
DOES SD imperial Rev.1/07 5/11/2023 1:45:16 PM

ORIGINAL SCALE IN INCHES FOR REDUCED PLANS 0 1 2 3

CU 0711
EA 0A53T1

DISREGARD PRINTS BEARING EARLIER REVISION DATES → 04/03/23

REVISION DATES (PRELIMINARY STAGE ONLY) SHEET OF

5/11/2023 1:45:16 PM

0421000155wj0803.dgn

DIST.	COUNTY	ROUTE	POST MILES TOTAL PROJECT	SHEET NO.	TOTAL SHEETS
04	Sol	12,80	L1.8/L3.2, 13.4/17.2		

REGISTERED CIVIL ENGINEER DATE

REGISTERED PROFESSIONAL ENGINEER No. Exp. CIVIL STATE OF CALIFORNIA

PLANS APPROVAL DATE

The State of California or its officers or agents shall not be responsible for the accuracy or completeness of electronic copies of this plan sheet.

WMH CORPORATION
11070 White Rock Rd,
Suite 140
Rancho Cordova, CA 95670

SOLANO TRANSPORTATION AUTHORITY
423 Main Street,
SUISUN CITY, CA 94585

NOTE:

FOR ACCURATE RIGHT OF WAY DATA, CONTACT RIGHT OF WAY ENGINEERING AT THE DISTRICT OFFICE.

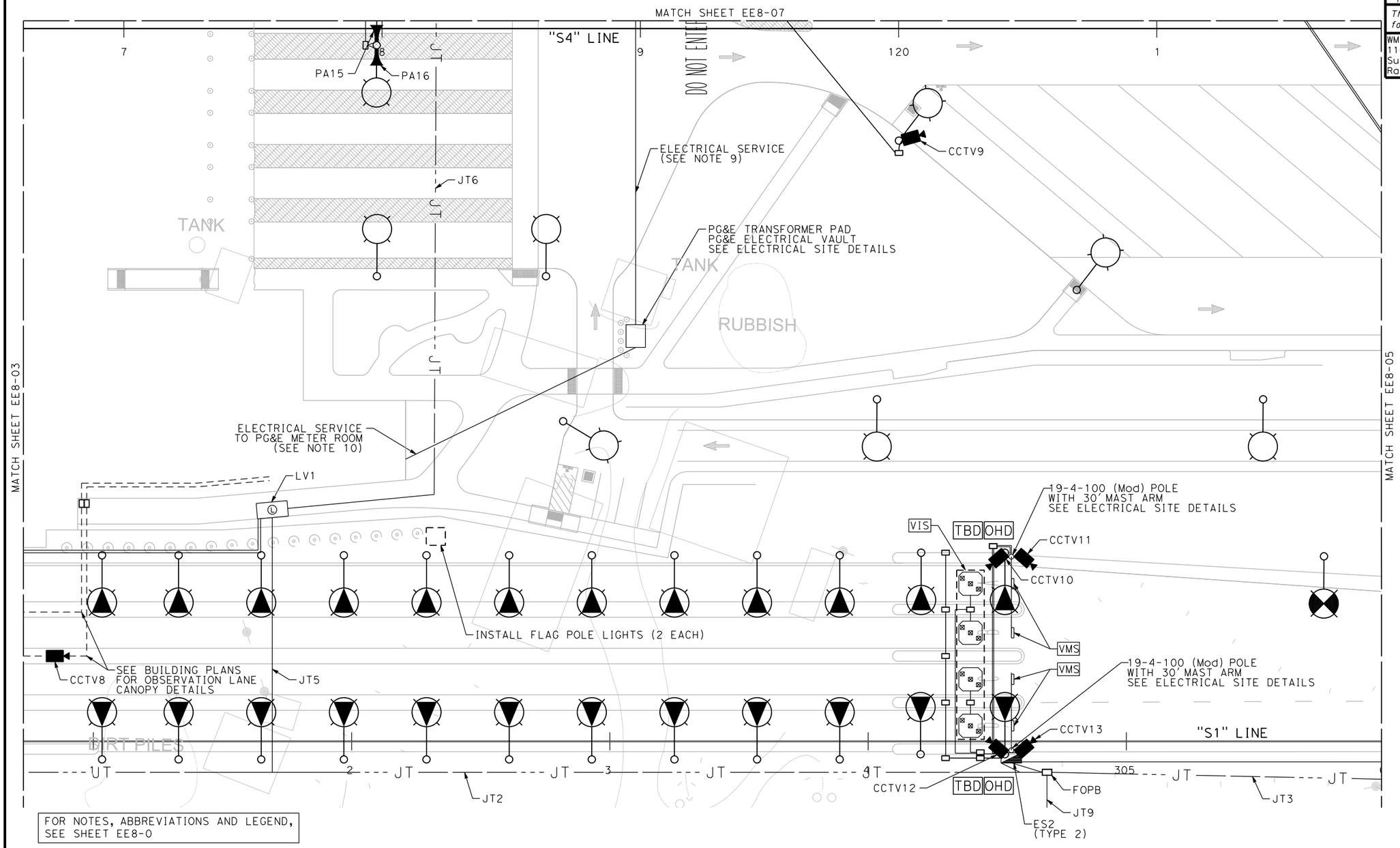

FOR NOTES, ABBREVIATIONS AND LEGEND, SEE SHEET EE8-0

SCALE: 1" = 20'

	BY	CHECKED
DESIGN	PARAS BATTH	SEAN CHARLES
DETAILS		
QUANTITIES		

PREPARED FOR THE STATE OF CALIFORNIA DEPARTMENT OF TRANSPORTATION

DIVISION OF ENGINEERING SERVICES
ARCHITECTURAL AND STRUCTURAL DESIGN

BRIDGE NO. 23W0001L
POST MILE 14.8

WESTBOUND CORDELIA CVEF

ELECTRICAL SITE
PLAN No. 4

SHEET **EE8-04**

0421000155wj0804.dgn
DOES SD imperial Rev.1/07 5/11/2023 1:45:22 PM

ORIGINAL SCALE IN INCHES FOR REDUCED PLANS 0 1 2 3

CU 0711
EA 0A53T1

DISREGARD PRINTS BEARING EARLIER REVISION DATES → 04/03/23

REVISION DATES (PRELIMINARY STAGE ONLY) SHEET OF

5/11/2023 1:45:22 PM

0421000155wj0804.dgn

DIST.	COUNTY	ROUTE	POST MILES TOTAL PROJECT	SHEET NO.	TOTAL SHEETS
04	Sol	12,80	L1.8/L3.2, 13.4/17.2		

REGISTERED CIVIL ENGINEER DATE

REGISTERED PROFESSIONAL ENGINEER No. Exp. CIVIL STATE OF CALIFORNIA

PLANS APPROVAL DATE

The State of California or its officers or agents shall not be responsible for the accuracy or completeness of electronic copies of this plan sheet.

WMH CORPORATION
11070 White Rock Rd,
Suite 140
Rancho Cordova, CA 95670

SOLANO TRANSPORTATION AUTHORITY
423 Main Street,
SUISUN CITY, CA 94585

NOTE:

FOR ACCURATE RIGHT OF WAY DATA, CONTACT RIGHT OF WAY ENGINEERING AT THE DISTRICT OFFICE.

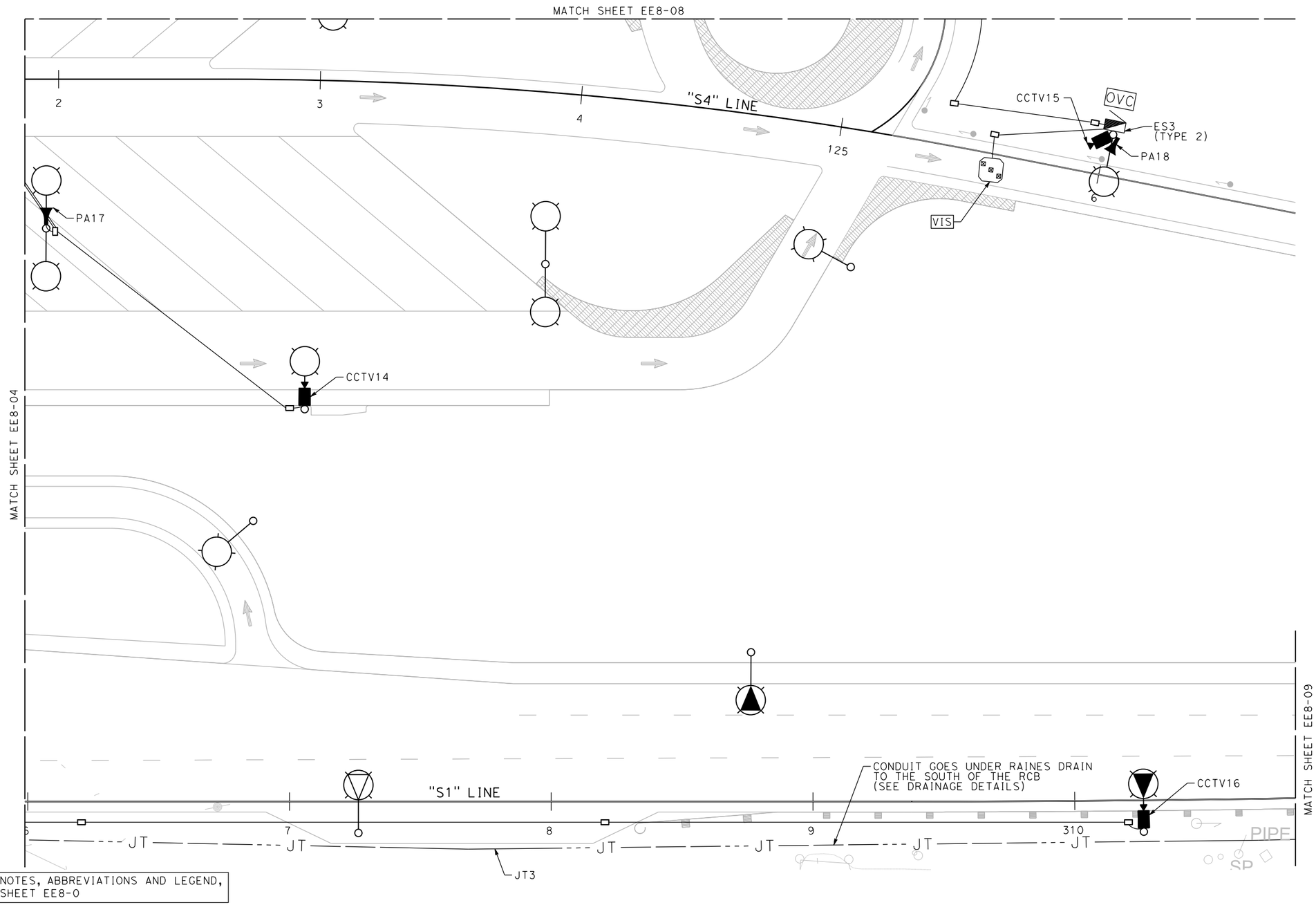

FOR NOTES, ABBREVIATIONS AND LEGEND, SEE SHEET EE8-0

SCALE: 1" = 20'

	BY	CHECKED
DESIGN	PARAS BATTH	SEAN CHARLES
DETAILS	BY	CHECKED
QUANTITIES	BY	CHECKED

PREPARED FOR THE STATE OF CALIFORNIA DEPARTMENT OF TRANSPORTATION

DIVISION OF ENGINEERING SERVICES
ARCHITECTURAL AND STRUCTURAL DESIGN

BRIDGE NO. 23W0001L
POST MILE 14.8

WESTBOUND CORDELIA CVEF

ELECTRICAL SITE
PLAN No. 5

SHEET **EE8-05**

0421000155wj0805.dgn
DOES SD imperial Rev.1/07 5/11/2023 1:45:28 PM

ORIGINAL SCALE IN INCHES FOR REDUCED PLANS 0 1 2 3

CU 0711
EA 0A53T1

DISREGARD PRINTS BEARING EARLIER REVISION DATES → 04/03/23

REVISION DATES (PRELIMINARY STAGE ONLY) SHEET OF

5/11/2023 1:45:28 PM

0421000155wj0805.dgn

DIST.	COUNTY	ROUTE	POST MILES TOTAL PROJECT	SHEET NO.	TOTAL SHEETS
04	Sol	12,80	L1.8/L3.2, 13.4/17.2		

REGISTERED CIVIL ENGINEER DATE

REGISTERED PROFESSIONAL ENGINEER No. Exp. CIVIL STATE OF CALIFORNIA

PLANS APPROVAL DATE

The State of California or its officers or agents shall not be responsible for the accuracy or completeness of electronic copies of this plan sheet.

WMH CORPORATION
11070 White Rock Rd,
Suite 140
Rancho Cordova, CA 95670

SOLANO TRANSPORTATION AUTHORITY
423 Main Street,
SUISUN CITY, CA 94585

NOTE:

FOR ACCURATE RIGHT OF WAY DATA, CONTACT RIGHT OF WAY ENGINEERING AT THE DISTRICT OFFICE.

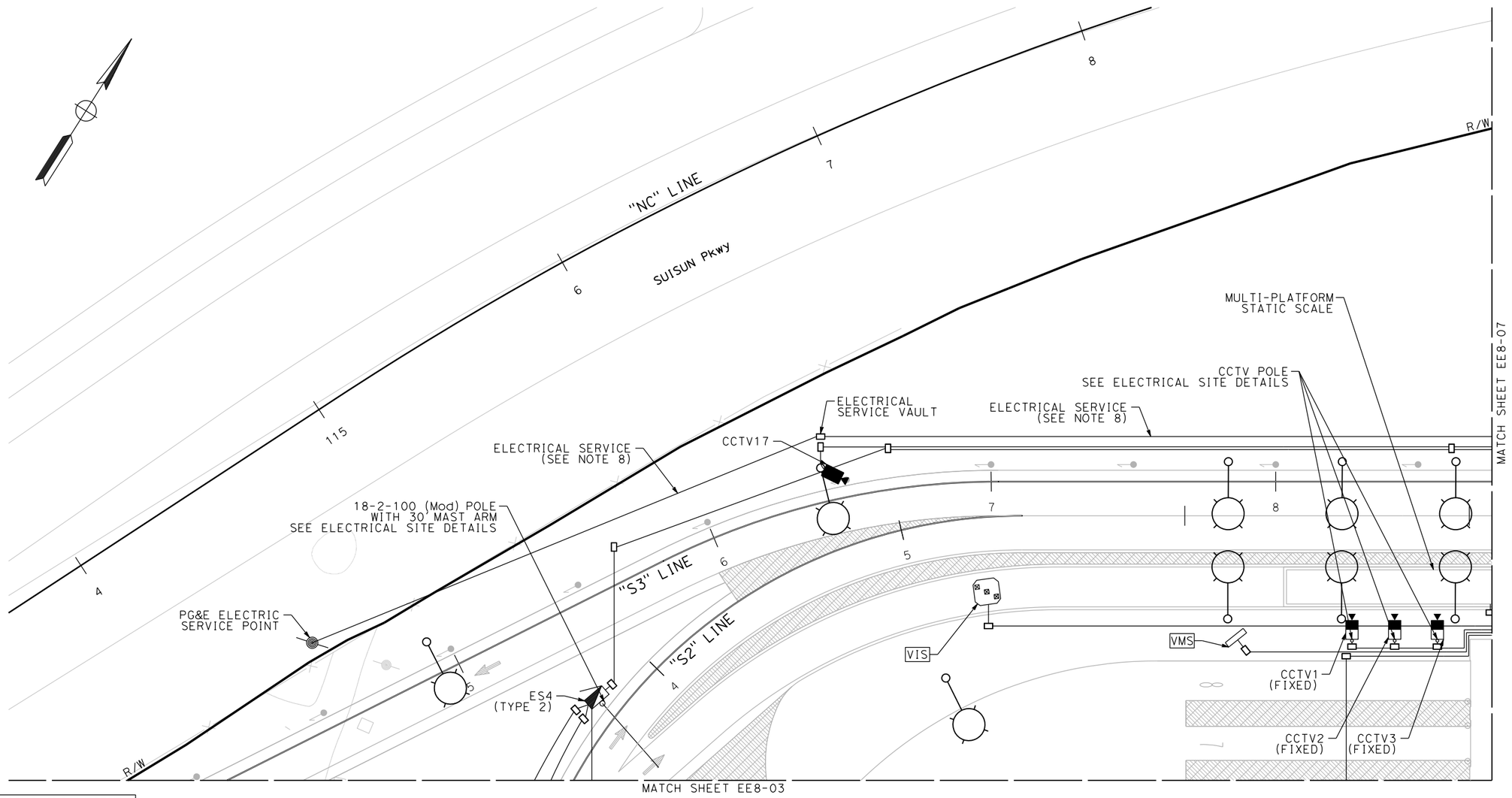

FOR NOTES, ABBREVIATIONS AND LEGEND, SEE SHEET EE8-0

SCALE: 1" = 20'

	BY	CHECKED
DESIGN	PARAS BATTH	SEAN CHARLES
DETAILS		
QUANTITIES		

PREPARED FOR THE STATE OF CALIFORNIA DEPARTMENT OF TRANSPORTATION

DIVISION OF ENGINEERING SERVICES
ARCHITECTURAL AND STRUCTURAL DESIGN

BRIDGE NO. 23W0001L
POST MILE 14.8

WESTBOUND CORDELIA CVEF

ELECTRICAL SITE PLAN No. 6

SHEET **EE8-06**

0421000155wj0806.dgn
DOES SD imperial Rev.1/07 5/11/2023 1:45:34 PM

ORIGINAL SCALE IN INCHES FOR REDUCED PLANS 0 1 2 3

CU 0711
EA 0A53T1

DISREGARD PRINTS BEARING EARLIER REVISION DATES → 04/03/23

REVISION DATES (PRELIMINARY STAGE ONLY) SHEET OF

5/11/2023 1:45:34 PM

0421000155wj0806.dgn

DIST.	COUNTY	ROUTE	POST MILES TOTAL PROJECT	SHEET NO.	TOTAL SHEETS
04	Sol	12,80	L1.8/L3.2, 13.4/17.2		

REGISTERED CIVIL ENGINEER DATE

REGISTERED PROFESSIONAL ENGINEER No. Exp. CIVIL STATE OF CALIFORNIA

PLANS APPROVAL DATE

The State of California or its officers or agents shall not be responsible for the accuracy or completeness of electronic copies of this plan sheet.

WMH CORPORATION
11070 White Rock Rd,
Suite 140
Rancho Cordova, CA 95670

SOLANO TRANSPORTATION AUTHORITY
423 Main Street,
SUISUN CITY, CA 94585

NOTE:

FOR ACCURATE RIGHT OF WAY DATA, CONTACT RIGHT OF WAY ENGINEERING AT THE DISTRICT OFFICE.

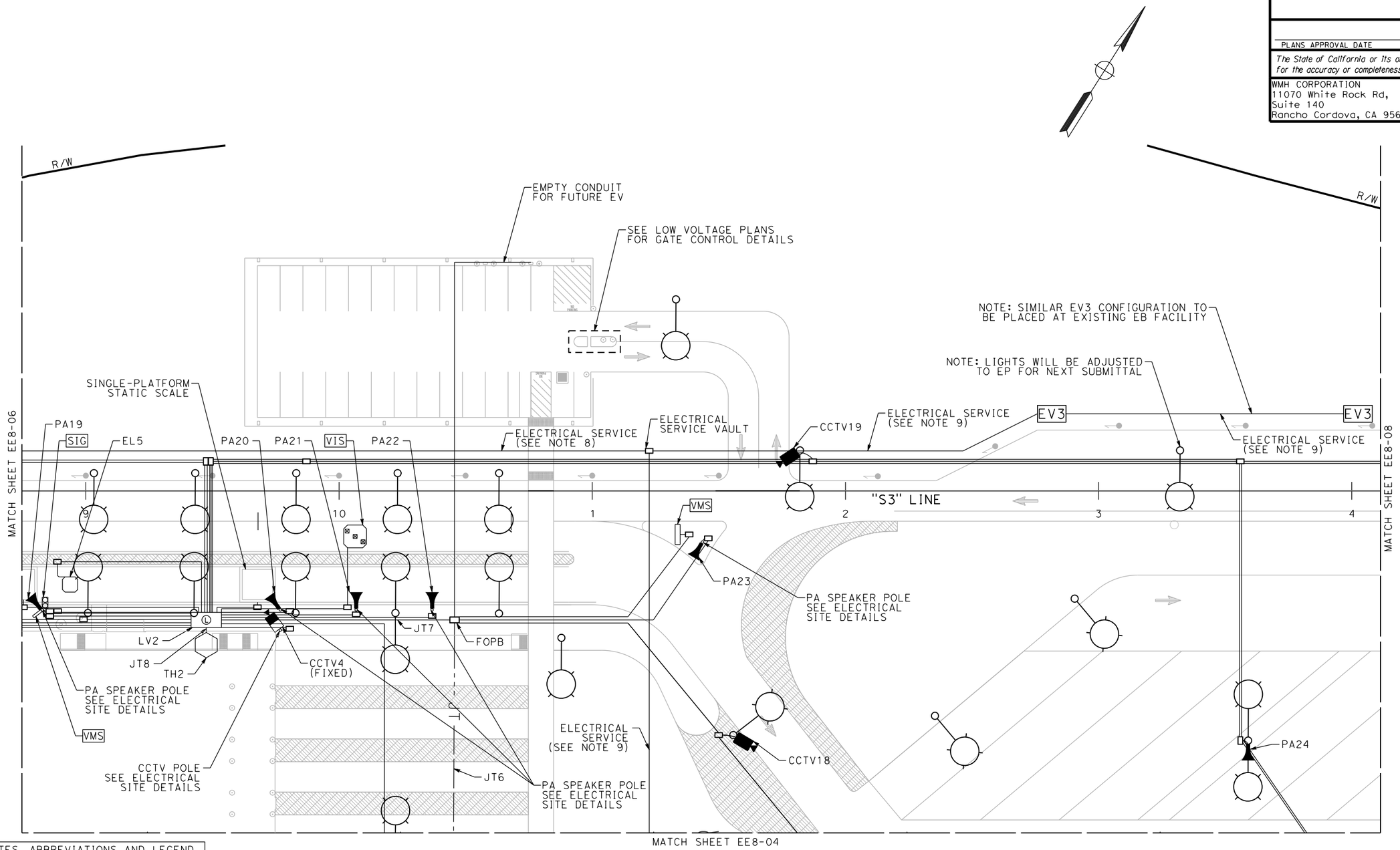

FOR NOTES, ABBREVIATIONS AND LEGEND, SEE SHEET EE8-0

SCALE: 1" = 20'

	BY	CHECKED
DESIGN	PARAS BATTH	SEAN CHARLES
DETAILS	BY	CHECKED
QUANTITIES	BY	CHECKED

PREPARED FOR THE STATE OF CALIFORNIA DEPARTMENT OF TRANSPORTATION

DIVISION OF ENGINEERING SERVICES
ARCHITECTURAL AND STRUCTURAL DESIGN

BRIDGE NO. 23W0001L
POST MILE 14.8

WESTBOUND CORDELIA CVEF

ELECTRICAL SITE PLAN No. 7

SHEET **EE8-07**

0421000155wj0807.dgn
DOES SD imperial Rev.1/07 5/11/2023 1:45:40 PM

ORIGINAL SCALE IN INCHES FOR REDUCED PLANS 0 1 2 3

CU 0711
EA 0A53T1

DISREGARD PRINTS BEARING EARLIER REVISION DATES → 04/03/23

REVISION DATES (PRELIMINARY STAGE ONLY) SHEET OF

5/11/2023 1:45:40 PM

0421000155wj0807.dgn

DIST.	COUNTY	ROUTE	POST MILES TOTAL PROJECT	SHEET NO.	TOTAL SHEETS
04	Sol	12,80	L1.8/L3.2, 13.4/17.2		

REGISTERED CIVIL ENGINEER DATE

REGISTERED PROFESSIONAL ENGINEER
No.
Exp.
CIVIL
STATE OF CALIFORNIA

PLANS APPROVAL DATE

The State of California or its officers or agents shall not be responsible for the accuracy or completeness of electronic copies of this plan sheet.

WMH CORPORATION
11070 White Rock Rd,
Suite 140
Rancho Cordova, CA 95670

SOLANO TRANSPORTATION AUTHORITY
423 Main Street,
SUISUN CITY, CA 94585

NOTE:

FOR ACCURATE RIGHT OF WAY DATA, CONTACT RIGHT OF WAY ENGINEERING AT THE DISTRICT OFFICE.

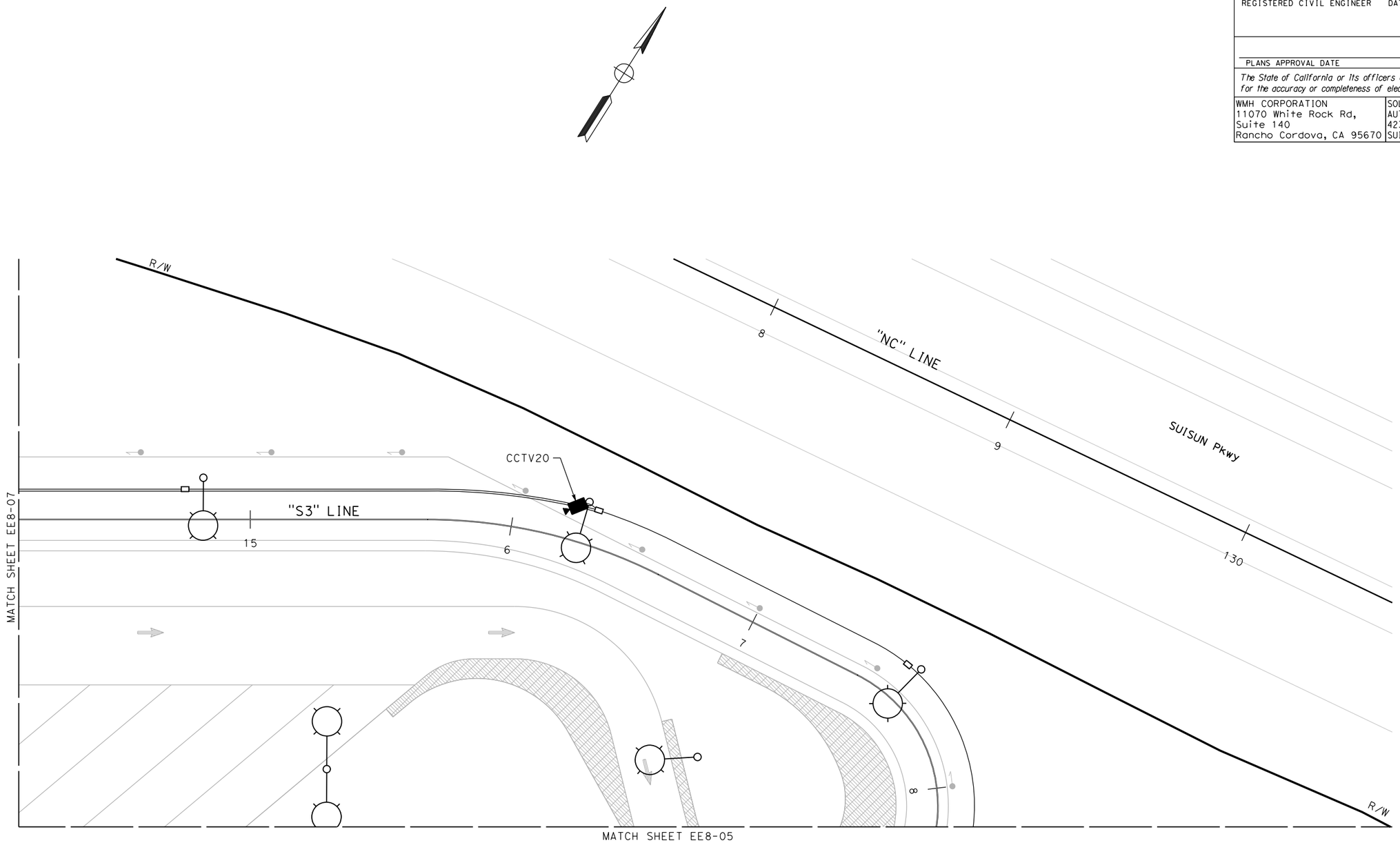

FOR NOTES, ABBREVIATIONS AND LEGEND, SEE SHEET EE8-0

SCALE: 1" = 20'

	BY	CHECKED
DESIGN	PARAS BATTH	SEAN CHARLES
DETAILS		
QUANTITIES		

PREPARED FOR THE STATE OF CALIFORNIA DEPARTMENT OF TRANSPORTATION

DIVISION OF ENGINEERING SERVICES
ARCHITECTURAL AND STRUCTURAL DESIGN

BRIDGE NO. 23W0001L
POST MILE 14.8

WESTBOUND CORDELIA CVEF

ELECTRICAL SITE
PLAN No. 8

SHEET **EE8-08**

0421000155wj0808.dgn
DOES SD imperial Rev.1/07 5/11/2023 1:45:46 PM

ORIGINAL SCALE IN INCHES FOR REDUCED PLANS 0 1 2 3

CU 0711
EA 0A53T1

DISREGARD PRINTS BEARING EARLIER REVISION DATES → 04/03/23

REVISION DATES (PRELIMINARY STAGE ONLY) SHEET OF

5/11/2023 1:45:45 PM

0421000155wj0808.dgn

DIST.	COUNTY	ROUTE	POST MILES TOTAL PROJECT	SHEET NO.	TOTAL SHEETS
04	Sol	12,80	L1.8/L3.2, 13.4/17.2		

REGISTERED CIVIL ENGINEER DATE

REGISTERED PROFESSIONAL ENGINEER No. Exp. CIVIL STATE OF CALIFORNIA

PLANS APPROVAL DATE

The State of California or its officers or agents shall not be responsible for the accuracy or completeness of electronic copies of this plan sheet.

WMH CORPORATION
11070 White Rock Rd,
Suite 140
Rancho Cordova, CA 95670

SOLANO TRANSPORTATION AUTHORITY
423 Main Street,
SUISUN CITY, CA 94585

NOTE:

FOR ACCURATE RIGHT OF WAY DATA, CONTACT RIGHT OF WAY ENGINEERING AT THE DISTRICT OFFICE.

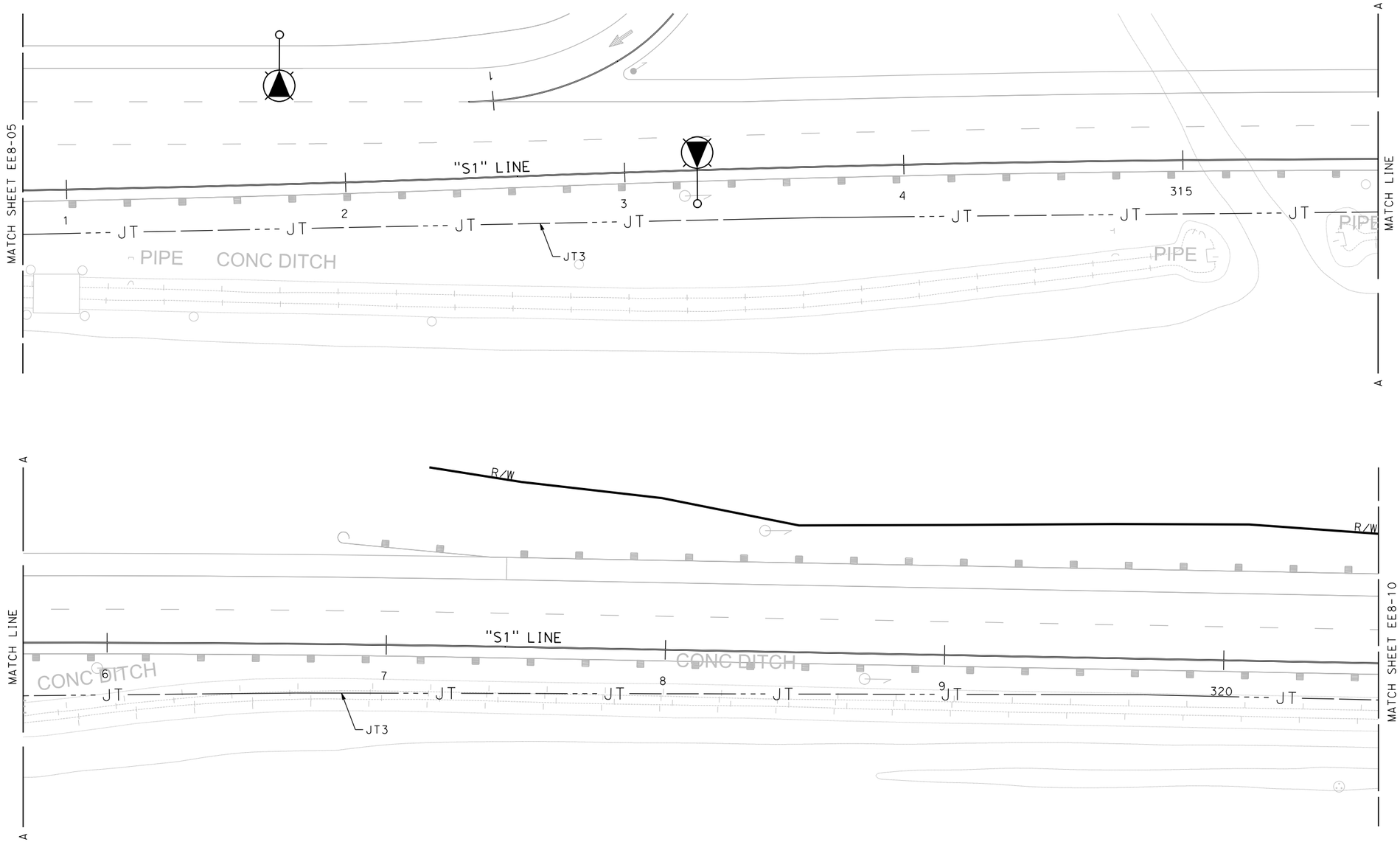

FOR NOTES, ABBREVIATIONS AND LEGEND, SEE SHEET EE8-0

SCALE: 1" = 20'

	BY	CHECKED
DESIGN	PARAS BATTH	SEAN CHARLES
DETAILS	BY	CHECKED
QUANTITIES	BY	CHECKED

PREPARED FOR THE STATE OF CALIFORNIA DEPARTMENT OF TRANSPORTATION

DIVISION OF ENGINEERING SERVICES
ARCHITECTURAL AND STRUCTURAL DESIGN

BRIDGE NO. 23W0001L
POST MILE 14.8

WESTBOUND CORDELIA CVEF

ELECTRICAL SITE PLAN No. 9

SHEET **EE8-9**

0421000155wj0809.dgn
DOES SD imperial Rev.1/07 5/11/2023 1:45:51 PM

ORIGINAL SCALE IN INCHES FOR REDUCED PLANS 0 1 2 3

CU 0711
EA 0A53T1

DISREGARD PRINTS BEARING EARLIER REVISION DATES → 04/03/23

REVISION DATES (PRELIMINARY STAGE ONLY) SHEET OF

5/11/2023 1:45:51 PM

0421000155wj0809.dgn

DIST.	COUNTY	ROUTE	POST MILES TOTAL PROJECT	SHEET NO.	TOTAL SHEETS
04	Sol	12,80	L1.8/L3.2, 13.4/17.2		

REGISTERED CIVIL ENGINEER DATE

REGISTERED PROFESSIONAL ENGINEER No. Exp. CIVIL STATE OF CALIFORNIA

PLANS APPROVAL DATE

The State of California or its officers or agents shall not be responsible for the accuracy or completeness of electronic copies of this plan sheet.

WMH CORPORATION
11070 White Rock Rd,
Suite 140
Rancho Cordova, CA 95670

SOLANO TRANSPORTATION AUTHORITY
423 Main Street,
SUISUN CITY, CA 94585

NOTE:

FOR ACCURATE RIGHT OF WAY DATA, CONTACT RIGHT OF WAY ENGINEERING AT THE DISTRICT OFFICE.

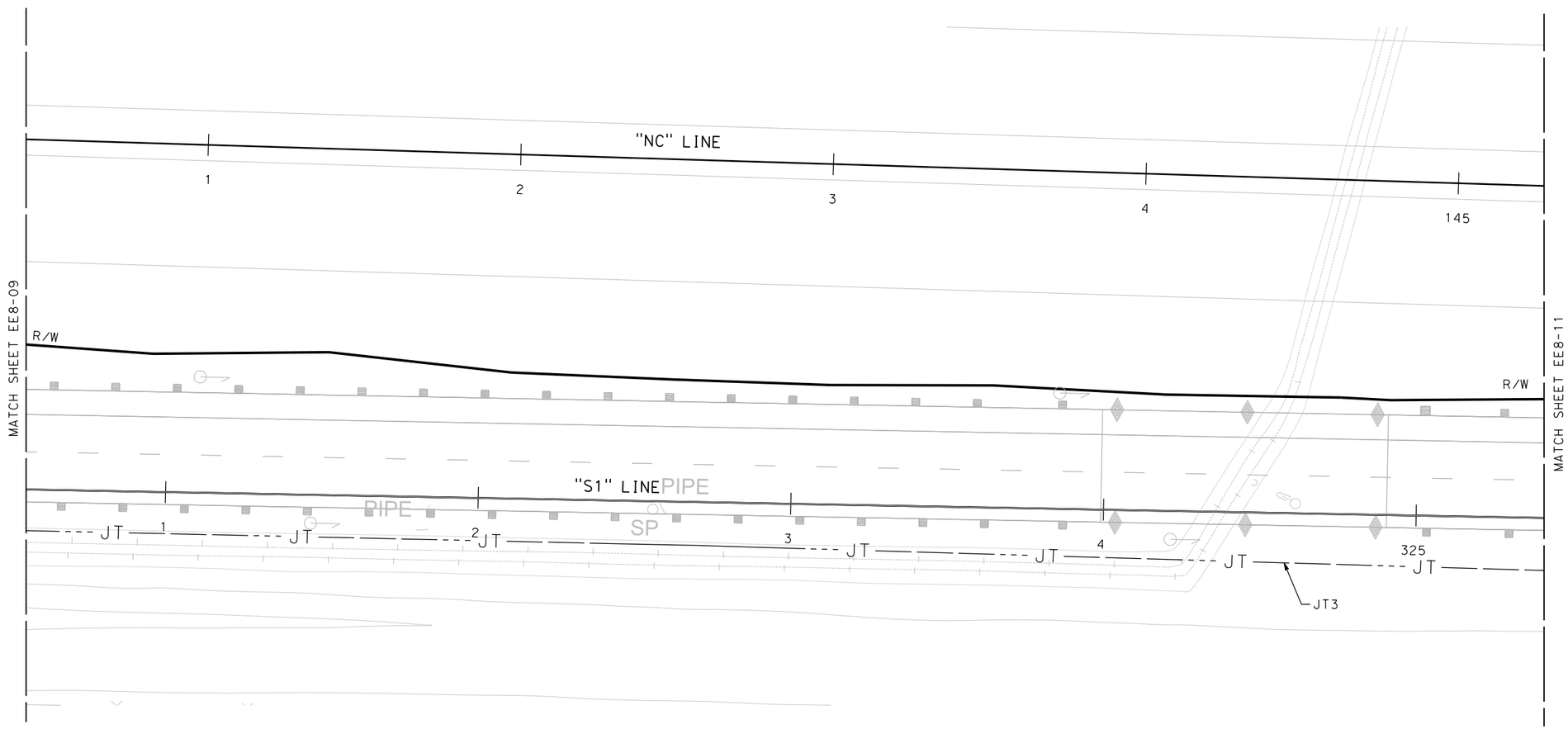

FOR NOTES, ABBREVIATIONS AND LEGEND, SEE SHEET EE8-0

SCALE: 1" = 20'

	BY	CHECKED
DESIGN	PARAS BATTH	SEAN CHARLES
DETAILS		
QUANTITIES		

PREPARED FOR THE STATE OF CALIFORNIA DEPARTMENT OF TRANSPORTATION

DIVISION OF ENGINEERING SERVICES
ARCHITECTURAL AND STRUCTURAL DESIGN

BRIDGE NO. 23W0001L
POST MILE 14.8

WESTBOUND CORDELIA CVEF

ELECTRICAL SITE PLAN No. 10

SHEET **EE8-10**

0421000155wj0810.dgn
DOES SD imperial Rev.1/07 5/11/2023 1:45:57 PM

ORIGINAL SCALE IN INCHES FOR REDUCED PLANS 0 1 2 3

CU 0711
EA 0A53T1

DISREGARD PRINTS BEARING EARLIER REVISION DATES → 04/03/23

REVISION DATES (PRELIMINARY STAGE ONLY) SHEET OF

5/11/2023 1:45:57 PM

0421000155wj0810.dgn

DIST.	COUNTY	ROUTE	POST MILES TOTAL PROJECT	SHEET NO.	TOTAL SHEETS
04	Sol	12,80	L1.8/L3.2, 13.4/17.2		

REGISTERED CIVIL ENGINEER DATE

REGISTERED PROFESSIONAL ENGINEER No. Exp. CIVIL STATE OF CALIFORNIA

PLANS APPROVAL DATE

The State of California or its officers or agents shall not be responsible for the accuracy or completeness of electronic copies of this plan sheet.

WMH CORPORATION
11070 White Rock Rd,
Suite 140
Rancho Cordova, CA 95670

SOLANO TRANSPORTATION AUTHORITY
423 Main Street,
SUISUN CITY, CA 94585

NOTE:

FOR ACCURATE RIGHT OF WAY DATA, CONTACT RIGHT OF WAY ENGINEERING AT THE DISTRICT OFFICE.

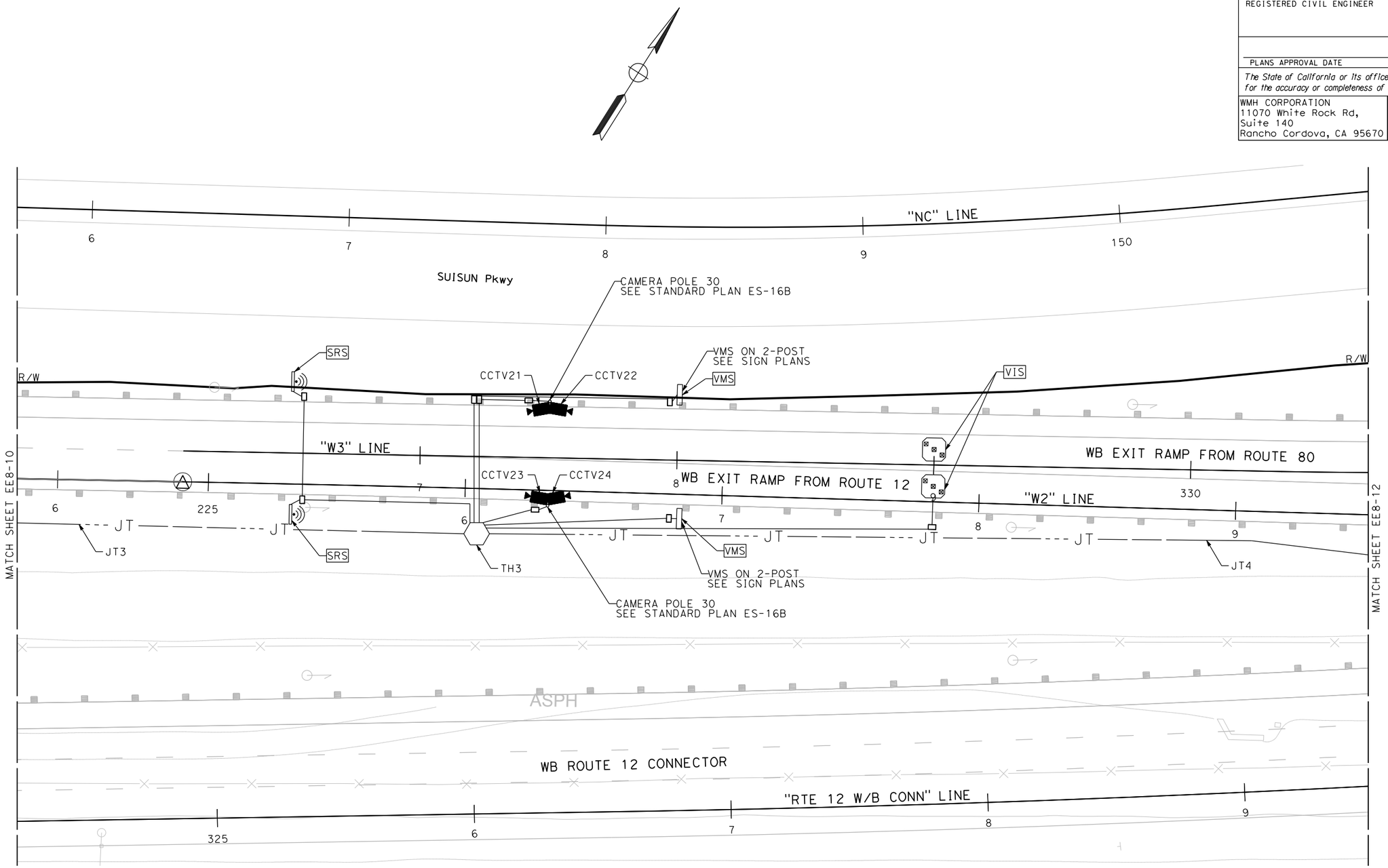

FOR NOTES, ABBREVIATIONS AND LEGEND, SEE SHEET EE8-0

SCALE: 1" = 20'

	BY	CHECKED
DESIGN	PARAS BATTH	SEAN CHARLES
DETAILS	BY	CHECKED
QUANTITIES	BY	CHECKED

PREPARED FOR THE STATE OF CALIFORNIA DEPARTMENT OF TRANSPORTATION

DIVISION OF ENGINEERING SERVICES
ARCHITECTURAL AND STRUCTURAL DESIGN

BRIDGE NO. 23W0001L
POST MILE 14.8

WESTBOUND CORDELIA CVEF

ELECTRICAL SITE PLAN No. 11

SHEET **EE8-11**

0421000155wj0811.dgn
DOES SD imperial Rev.1/07 5/11/2023 1:46:02 PM

ORIGINAL SCALE IN INCHES FOR REDUCED PLANS 0 1 2 3

CU 0711
EA 0A53T1

DISREGARD PRINTS BEARING EARLIER REVISION DATES → 04/03/23

REVISION DATES (PRELIMINARY STAGE ONLY) SHEET OF

5/11/2023 1:46:02 PM

0421000155wj0811.dgn

DIST.	COUNTY	ROUTE	POST MILES TOTAL PROJECT	SHEET NO.	TOTAL SHEETS
04	Sol	12,80	L1.8/L3.2, 13.4/17.2		

REGISTERED CIVIL ENGINEER DATE

REGISTERED PROFESSIONAL ENGINEER No. Exp. CIVIL STATE OF CALIFORNIA

PLANS APPROVAL DATE

The State of California or its officers or agents shall not be responsible for the accuracy or completeness of electronic copies of this plan sheet.

WMH CORPORATION
11070 White Rock Rd,
Suite 140
Rancho Cordova, CA 95670

SOLANO TRANSPORTATION AUTHORITY
423 Main Street,
SUISUN CITY, CA 94585

NOTE:

FOR ACCURATE RIGHT OF WAY DATA, CONTACT RIGHT OF WAY ENGINEERING AT THE DISTRICT OFFICE.

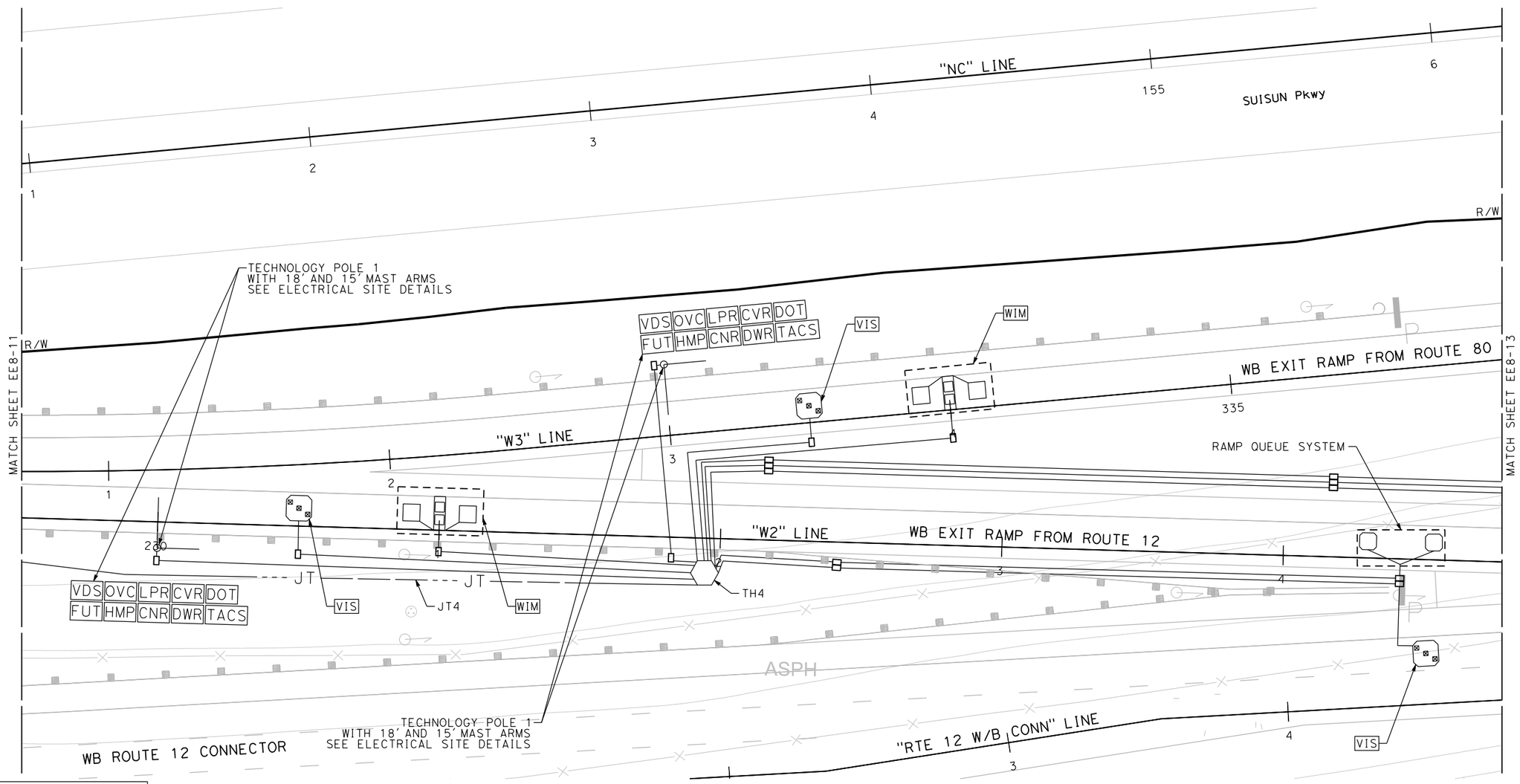

FOR NOTES, ABBREVIATIONS AND LEGEND, SEE SHEET EE8-0

SCALE: 1" = 20'

	BY	CHECKED
DESIGN	PARAS BATTH	SEAN CHARLES
DETAILS	BY	CHECKED
QUANTITIES	BY	CHECKED

PREPARED FOR THE STATE OF CALIFORNIA DEPARTMENT OF TRANSPORTATION

DIVISION OF ENGINEERING SERVICES
ARCHITECTURAL AND STRUCTURAL DESIGN

BRIDGE NO. 23W0001L
POST MILE 14.8

WESTBOUND CORDELIA CVEF

ELECTRICAL SITE PLAN No. 12

SHEET **EE8-12**

0421000155wj0812.dgn
DOES SD imperial Rev.1/07 5/11/2023 1:46:08 PM

ORIGINAL SCALE IN INCHES FOR REDUCED PLANS 0 1 2 3

CU 0711
EA 0A53T1

DISREGARD PRINTS BEARING EARLIER REVISION DATES → 04/03/23

REVISION DATES (PRELIMINARY STAGE ONLY) SHEET OF

5/11/2023 1:46:08 PM

0421000155wj0812.dgn

DIST.	COUNTY	ROUTE	POST MILES TOTAL PROJECT	SHEET NO.	TOTAL SHEETS
04	Sol	12,80	L1.8/L3.2, 13.4/17.2		

REGISTERED CIVIL ENGINEER DATE

REGISTERED PROFESSIONAL ENGINEER No. Exp. CIVIL STATE OF CALIFORNIA

PLANS APPROVAL DATE

The State of California or its officers or agents shall not be responsible for the accuracy or completeness of electronic copies of this plan sheet.

WMH CORPORATION
11070 White Rock Rd,
Suite 140
Rancho Cordova, CA 95670

SOLANO TRANSPORTATION AUTHORITY
423 Main Street,
SUISUN CITY, CA 94585

NOTE:

FOR ACCURATE RIGHT OF WAY DATA, CONTACT RIGHT OF WAY ENGINEERING AT THE DISTRICT OFFICE.

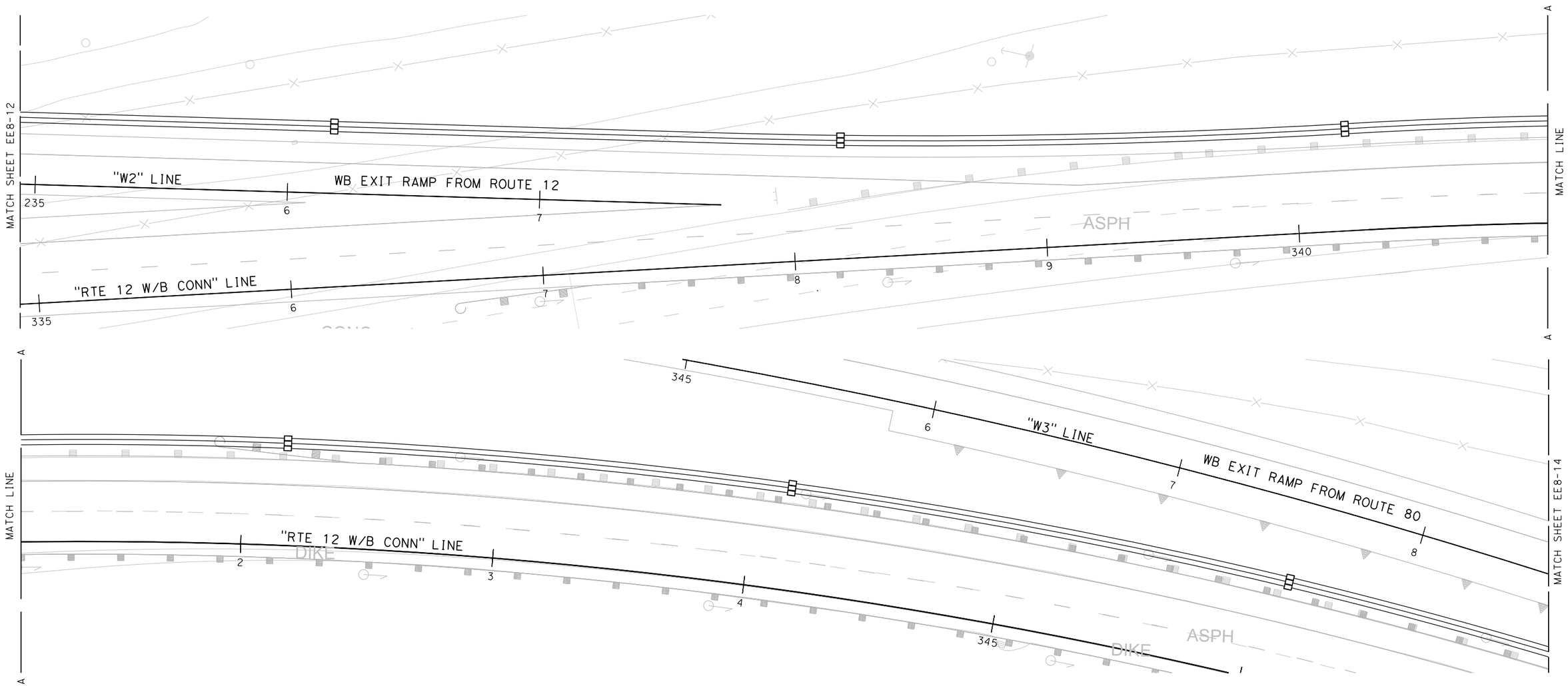

FOR NOTES, ABBREVIATIONS AND LEGEND, SEE SHEET EE8-0

SCALE: 1" = 20'

	BY	CHECKED
DESIGN	PARAS BATTH	SEAN CHARLES
DETAILS	BY	CHECKED
QUANTITIES	BY	CHECKED

PREPARED FOR THE STATE OF CALIFORNIA DEPARTMENT OF TRANSPORTATION

DIVISION OF ENGINEERING SERVICES
ARCHITECTURAL AND STRUCTURAL DESIGN

BRIDGE NO. 23W0001L
POST MILE 14.8

WESTBOUND CORDELIA CVEF

ELECTRICAL SITE PLAN No. 13

SHEET **EE8-13**

0421000155wj0813.dgn
DOES SD imperial Rev.1/07 5/11/2023 1:46:14 PM

ORIGINAL SCALE IN INCHES FOR REDUCED PLANS 0 1 2 3

CU 0711
EA 0A53T1

DISREGARD PRINTS BEARING EARLIER REVISION DATES → 04/03/23

REVISION DATES (PRELIMINARY STAGE ONLY) SHEET OF

5/11/2023 1:46:14 PM

0421000155wj0813.dgn

DIST.	COUNTY	ROUTE	POST MILES TOTAL PROJECT	SHEET NO.	TOTAL SHEETS
04	Sol	12,80	L1.8/L3.2, 13.4/17.2		

REGISTERED CIVIL ENGINEER DATE

REGISTERED PROFESSIONAL ENGINEER No. Exp. CIVIL STATE OF CALIFORNIA

PLANS APPROVAL DATE

The State of California or its officers or agents shall not be responsible for the accuracy or completeness of electronic copies of this plan sheet.

WMH CORPORATION
11070 White Rock Rd,
Suite 140
Rancho Cordova, CA 95670

SOLANO TRANSPORTATION AUTHORITY
423 Main Street,
SUISUN CITY, CA 94585

NOTE:

FOR ACCURATE RIGHT OF WAY DATA, CONTACT RIGHT OF WAY ENGINEERING AT THE DISTRICT OFFICE.

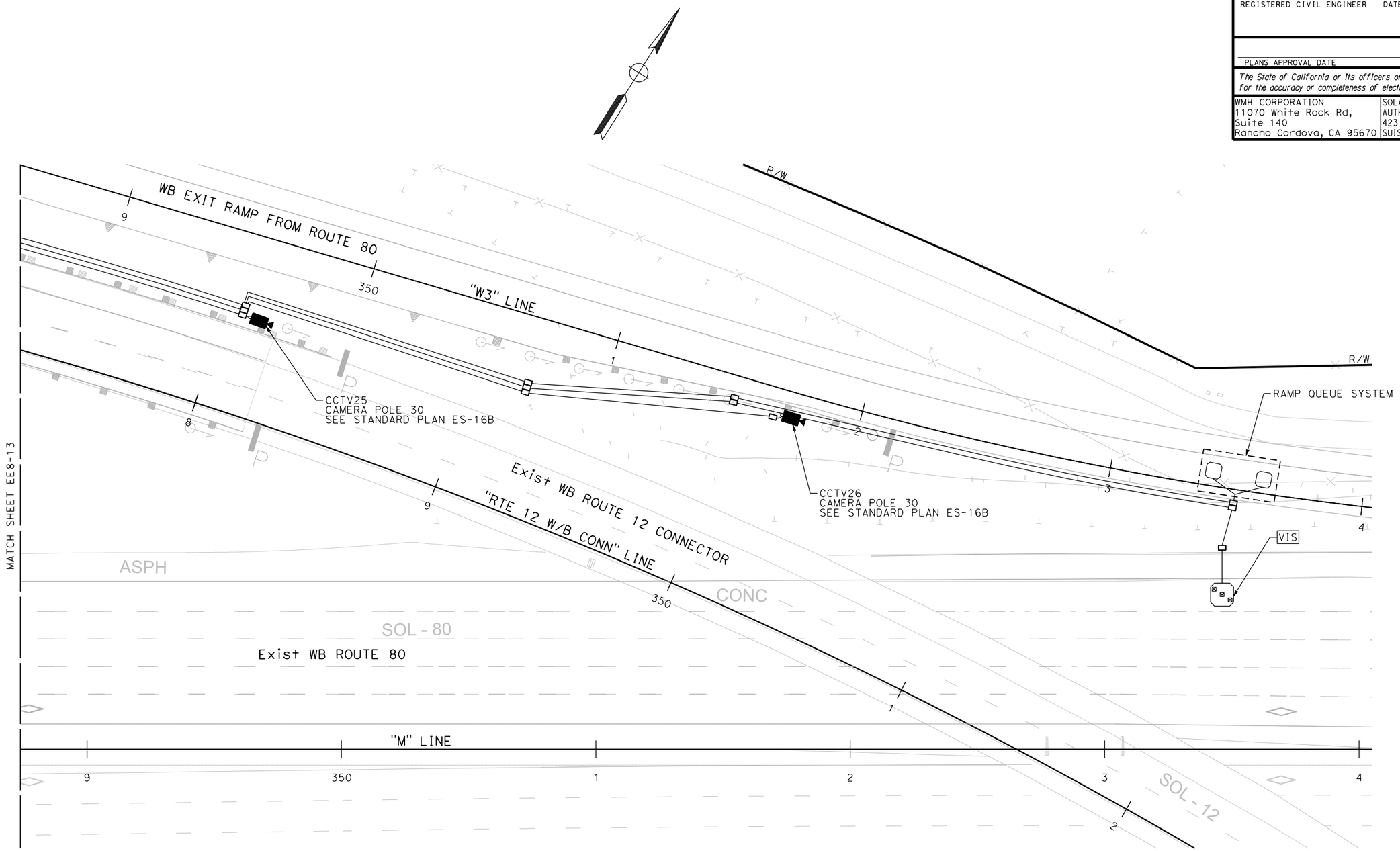

FOR NOTES, ABBREVIATIONS AND LEGEND, SEE SHEET EE8-0

SCALE: 1" = 20'

	BY	CHECKED
DESIGN	PARAS BATTH	SEAN CHARLES
DETAILS		
QUANTITIES		

PREPARED FOR THE STATE OF CALIFORNIA DEPARTMENT OF TRANSPORTATION

DIVISION OF ENGINEERING SERVICES
ARCHITECTURAL AND STRUCTURAL DESIGN

BRIDGE NO. 23W0001L
POST MILE 14.8

WESTBOUND CORDELIA CVEF

ELECTRICAL SITE PLAN No. 14

SHEET **EE8-14**

0421000155wj0814.dgn
DOES SD imperial Rev.1/07 5/11/2023 1:46:20 PM

ORIGINAL SCALE IN INCHES FOR REDUCED PLANS 0 1 2 3

CU 0711
EA 0A53T1

DISREGARD PRINTS BEARING EARLIER REVISION DATES → 04/03/23

REVISION DATES (PRELIMINARY STAGE ONLY) SHEET OF

5/11/2023 1:46:20 PM

0421000155wj0814.dgn

DIST.	COUNTY	ROUTE	POST MILES TOTAL PROJECT	SHEET NO.	TOTAL SHEETS
04	Sol	12,80	L1.8/L3.2, 13.4/17.2		

REGISTERED CIVIL ENGINEER DATE

REGISTERED PROFESSIONAL ENGINEER No. Exp. CIVIL STATE OF CALIFORNIA

PLANS APPROVAL DATE

The State of California or its officers or agents shall not be responsible for the accuracy or completeness of electronic copies of this plan sheet.

WMH CORPORATION
11070 White Rock Rd,
Suite 140
Rancho Cordova, CA 95670

SOLANO TRANSPORTATION AUTHORITY
423 Main Street,
SUISUN CITY, CA 94585

NOTE:

FOR ACCURATE RIGHT OF WAY DATA, CONTACT RIGHT OF WAY ENGINEERING AT THE DISTRICT OFFICE.

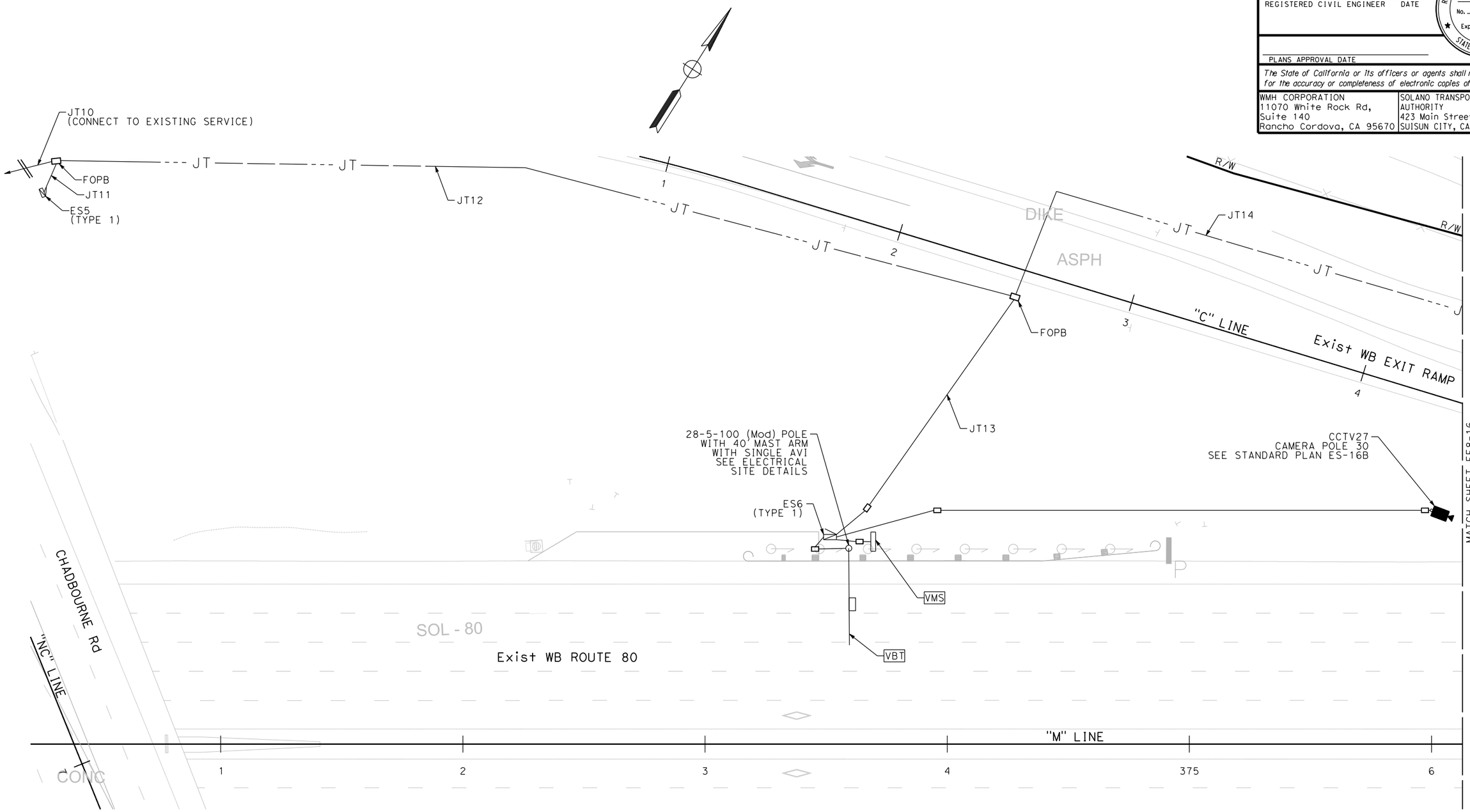

FOR NOTES, ABBREVIATIONS AND LEGEND, SEE SHEET EE8-0

SCALE: 1" = 20'

	BY	CHECKED
DESIGN	PARAS BATTH	SEAN CHARLES
DETAILS	BY	CHECKED
QUANTITIES	BY	CHECKED

PREPARED FOR THE STATE OF CALIFORNIA DEPARTMENT OF TRANSPORTATION

DIVISION OF ENGINEERING SERVICES
ARCHITECTURAL AND STRUCTURAL DESIGN

BRIDGE NO. 23W0001L
POST MILE 14.8

WESTBOUND CORDELIA CVEF

ELECTRICAL SITE PLAN No. 15

SHEET **EE8-15**

0421000155wj0815.dgn
DOES SD imperial Rev.1/07 5/11/2023 1:46:25 PM

ORIGINAL SCALE IN INCHES FOR REDUCED PLANS 0 1 2 3

CU 0711
EA 0A53T1

DISREGARD PRINTS BEARING EARLIER REVISION DATES → 04/03/23

REVISION DATES (PRELIMINARY STAGE ONLY) SHEET OF

5/11/2023 1:46:25 PM

0421000155wj0815.dgn

DIST.	COUNTY	ROUTE	POST MILES TOTAL PROJECT	SHEET NO.	TOTAL SHEETS
04	Sol	12,80	L1.8/L3.2, 13.4/17.2		

REGISTERED CIVIL ENGINEER DATE

REGISTERED PROFESSIONAL ENGINEER No. Exp. CIVIL STATE OF CALIFORNIA

PLANS APPROVAL DATE

The State of California or its officers or agents shall not be responsible for the accuracy or completeness of electronic copies of this plan sheet.

WMH CORPORATION
11070 White Rock Rd,
Suite 140
Rancho Cordova, CA 95670

SOLANO TRANSPORTATION AUTHORITY
423 Main Street,
SUISUN CITY, CA 94585

NOTE:

FOR ACCURATE RIGHT OF WAY DATA, CONTACT RIGHT OF WAY ENGINEERING AT THE DISTRICT OFFICE.

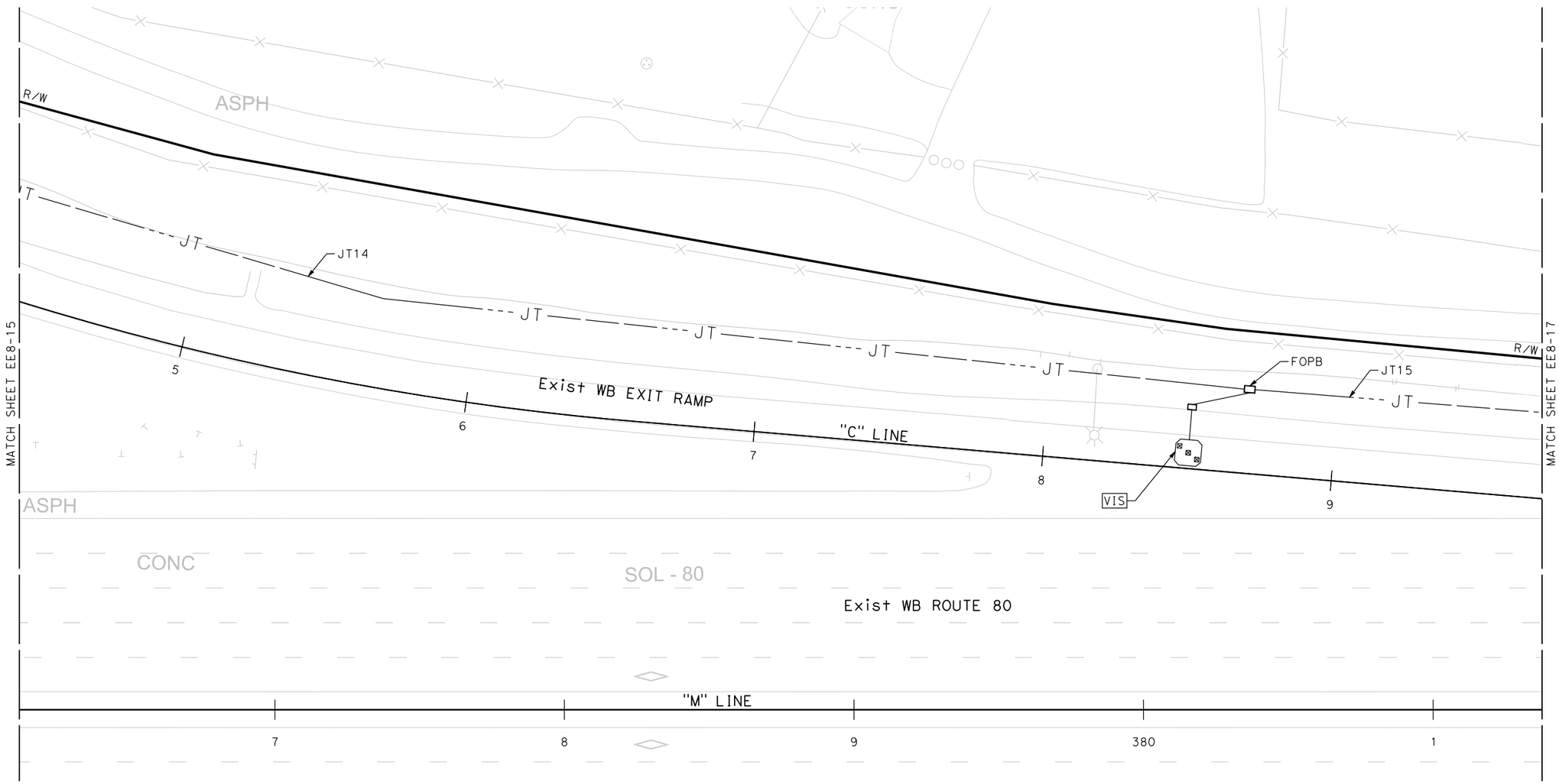

FOR NOTES, ABBREVIATIONS AND LEGEND, SEE SHEET EE8-0

SCALE: 1" = 20'

	BY	CHECKED
DESIGN	PARAS BATTH	SEAN CHARLES
DETAILS	BY	CHECKED
QUANTITIES	BY	CHECKED

PREPARED FOR THE STATE OF CALIFORNIA DEPARTMENT OF TRANSPORTATION

DIVISION OF ENGINEERING SERVICES
ARCHITECTURAL AND STRUCTURAL DESIGN

BRIDGE NO. 23W0001L
POST MILE 14.8

WESTBOUND CORDELIA CVEF

ELECTRICAL SITE PLAN No. 16

SHEET **EE8-16**

0421000155wj0816.dgn
DOES SD imperial Rev.1/07 5/11/2023 1:46:31 PM

ORIGINAL SCALE IN INCHES FOR REDUCED PLANS 0 1 2 3

CU 0711
EA 0A53T1

DISREGARD PRINTS BEARING EARLIER REVISION DATES → 04/03/23

REVISION DATES (PRELIMINARY STAGE ONLY) SHEET OF

5/11/2023 1:46:31 PM

0421000155wj0816.dgn

DIST.	COUNTY	ROUTE	POST MILES TOTAL PROJECT	SHEET NO.	TOTAL SHEETS
04	Sol	12,80	L1.8/L3.2, 13.4/17.2		

REGISTERED CIVIL ENGINEER DATE

REGISTERED PROFESSIONAL ENGINEER No. Exp. CIVIL STATE OF CALIFORNIA

PLANS APPROVAL DATE

The State of California or its officers or agents shall not be responsible for the accuracy or completeness of electronic copies of this plan sheet.

WMH CORPORATION
11070 White Rock Rd,
Suite 140
Rancho Cordova, CA 95670

SOLANO TRANSPORTATION AUTHORITY
423 Main Street,
SUISUN CITY, CA 94585

NOTE:

FOR ACCURATE RIGHT OF WAY DATA, CONTACT RIGHT OF WAY ENGINEERING AT THE DISTRICT OFFICE.

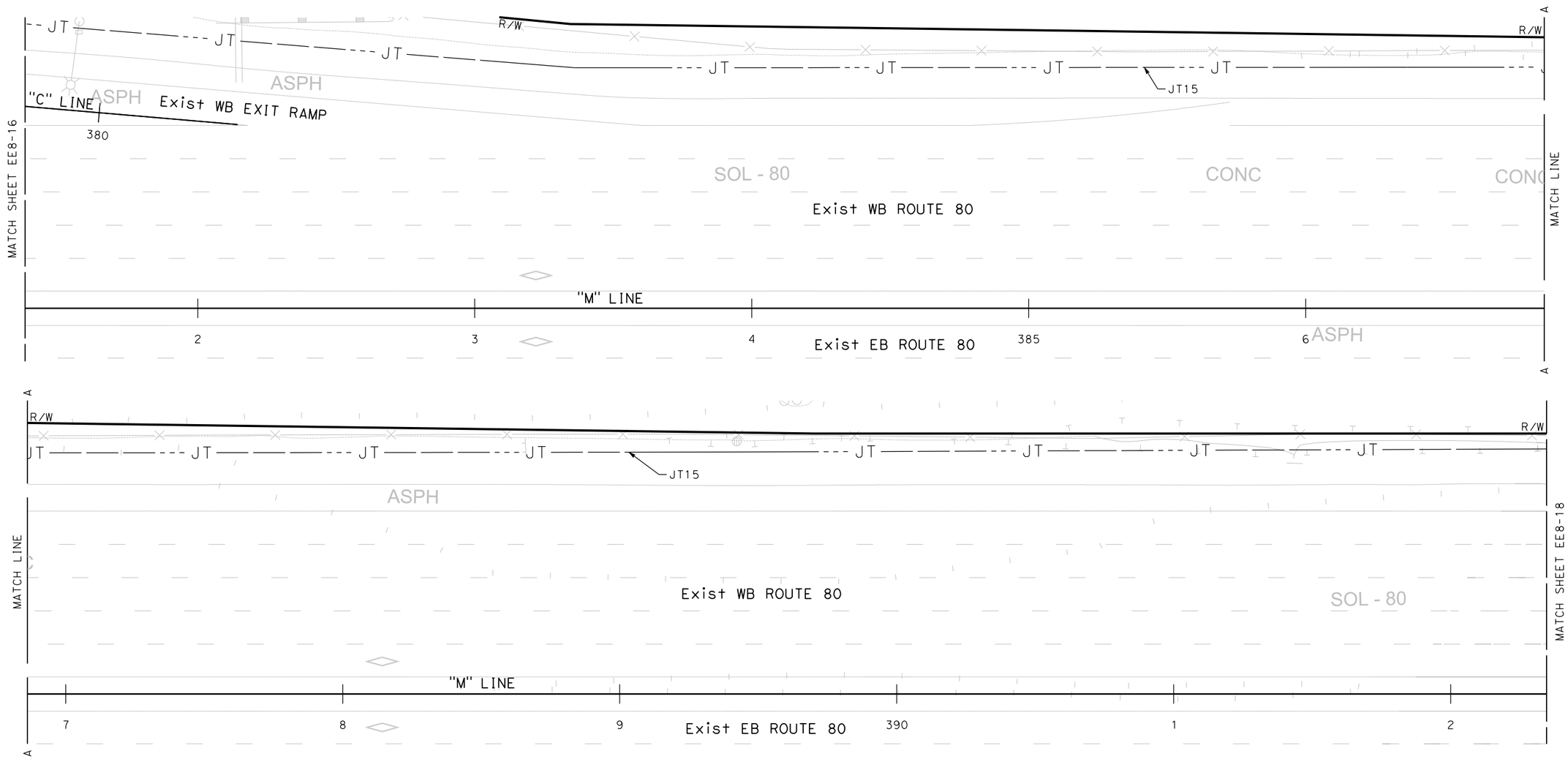

FOR NOTES, ABBREVIATIONS AND LEGEND, SEE SHEET EE8-0

SCALE: 1" = 20'

	BY	CHECKED
DESIGN	PARAS BATTH	SEAN CHARLES
DETAILS		
QUANTITIES		

PREPARED FOR THE STATE OF CALIFORNIA DEPARTMENT OF TRANSPORTATION

DIVISION OF ENGINEERING SERVICES
ARCHITECTURAL AND STRUCTURAL DESIGN

BRIDGE NO. 23W0001L
POST MILE 14.8

WESTBOUND CORDELIA CVEF

ELECTRICAL SITE PLAN No. 17

SHEET **EE8-17**

0421000155wj0817.dgn
DOES SD imperial Rev.1/07 5/11/2023 1:46:37 PM

ORIGINAL SCALE IN INCHES FOR REDUCED PLANS 0 1 2 3

CU 0711
EA 0A53T1

DISREGARD PRINTS BEARING EARLIER REVISION DATES → 04/03/23

REVISION DATES (PRELIMINARY STAGE ONLY) SHEET OF

5/11/2023 1:46:37 PM

0421000155wj0817.dgn

DIST.	COUNTY	ROUTE	POST MILES TOTAL PROJECT	SHEET NO.	TOTAL SHEETS
04	Sol	12,80	L1.8/L3.2, 13.4/17.2		

REGISTERED CIVIL ENGINEER DATE

REGISTERED PROFESSIONAL ENGINEER No. Exp. CIVIL STATE OF CALIFORNIA

PLANS APPROVAL DATE

The State of California or its officers or agents shall not be responsible for the accuracy or completeness of electronic copies of this plan sheet.

WMH CORPORATION
11070 White Rock Rd,
Suite 140
Rancho Cordova, CA 95670

SOLANO TRANSPORTATION AUTHORITY
423 Main Street,
SUISUN CITY, CA 94585

NOTE:

FOR ACCURATE RIGHT OF WAY DATA, CONTACT RIGHT OF WAY ENGINEERING AT THE DISTRICT OFFICE.

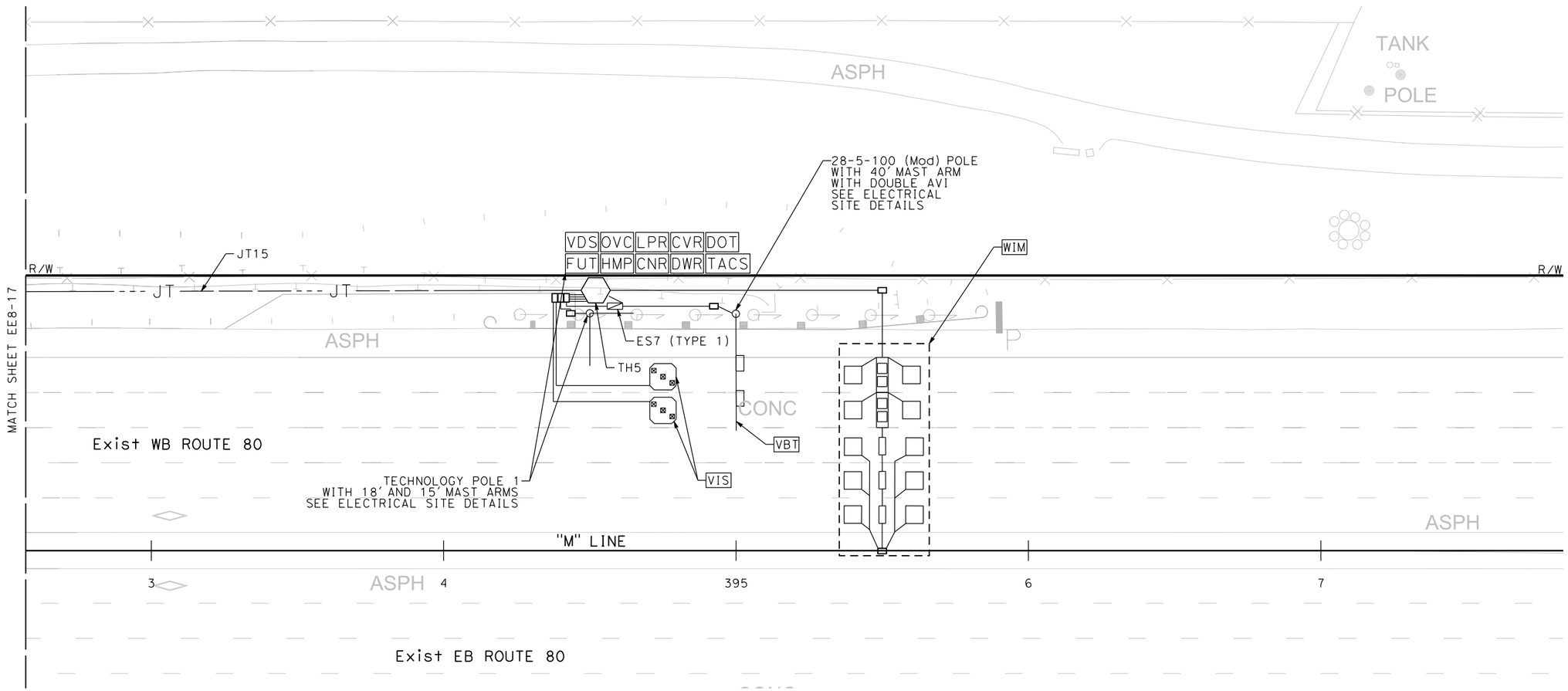

FOR NOTES, ABBREVIATIONS AND LEGEND, SEE SHEET EE8-0

SCALE: 1" = 20'

	BY	CHECKED
DESIGN	PARAS BATTH	SEAN CHARLES
DETAILS		
QUANTITIES		

PREPARED FOR THE STATE OF CALIFORNIA DEPARTMENT OF TRANSPORTATION

DIVISION OF ENGINEERING SERVICES
ARCHITECTURAL AND STRUCTURAL DESIGN

BRIDGE NO. 23W0001L
POST MILE 14.8

WESTBOUND CORDELIA CVEF

ELECTRICAL SITE PLAN No. 18

SHEET **EE8-18**

0421000155wj0818.dgn
DOES SD imperial Rev.1/07 5/11/2023 1:46:42 PM

ORIGINAL SCALE IN INCHES FOR REDUCED PLANS 0 1 2 3

CU 0711
EA 0A53T1

DISREGARD PRINTS BEARING EARLIER REVISION DATES → 04/03/23

REVISION DATES (PRELIMINARY STAGE ONLY) SHEET OF

5/11/2023 1:46:42 PM

0421000155wj0818.dgn

DIST.	COUNTY	ROUTE	POST MILES TOTAL PROJECT	SHEET NO.	TOTAL SHEETS
04	Sol	12,80	L1.8/L3.2, 13.4/17.2		

REGISTERED CIVIL ENGINEER DATE

REGISTERED PROFESSIONAL ENGINEER No. Exp. CIVIL STATE OF CALIFORNIA

PLANS APPROVAL DATE

The State of California or its officers or agents shall not be responsible for the accuracy or completeness of electronic copies of this plan sheet.

WMH CORPORATION
11070 White Rock Rd,
Suite 140
Rancho Cordova, CA 95670

SOLANO TRANSPORTATION AUTHORITY
423 Main Street,
SUISUN CITY, CA 94585

NOTE:

FOR ACCURATE RIGHT OF WAY DATA, CONTACT RIGHT OF WAY ENGINEERING AT THE DISTRICT OFFICE.

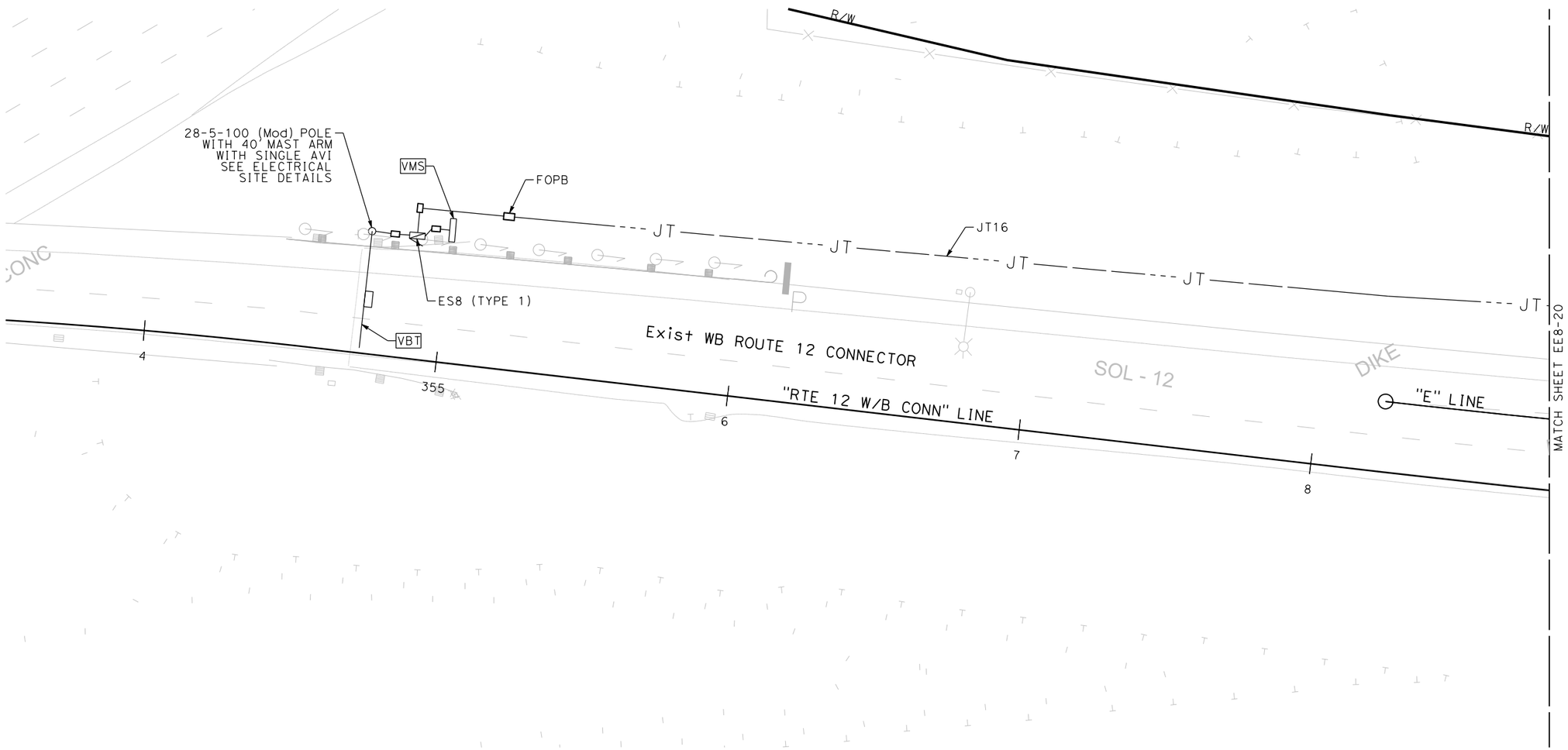

FOR NOTES, ABBREVIATIONS AND LEGEND, SEE SHEET EE8-0

SCALE: 1" = 20'

	BY	CHECKED
DESIGN	PARAS BATTH	SEAN CHARLES
DETAILS		
QUANTITIES		

PREPARED FOR THE STATE OF CALIFORNIA DEPARTMENT OF TRANSPORTATION

DIVISION OF ENGINEERING SERVICES ARCHITECTURAL AND STRUCTURAL DESIGN

BRIDGE NO. 23W0001L
POST MILE 14.8

WESTBOUND CORDELIA CVEF

ELECTRICAL SITE PLAN No. 19

SHEET **EE8-19**

0421000155wj0819.dgn
DOES SD imperial Rev.1/07 5/11/2023 1:46:47 PM

ORIGINAL SCALE IN INCHES FOR REDUCED PLANS 0 1 2 3

CU 0711
EA 0A53T1

DISREGARD PRINTS BEARING EARLIER REVISION DATES → 04/03/23

REVISION DATES (PRELIMINARY STAGE ONLY) SHEET OF

5/11/2023 1:46:47 PM

0421000155wj0819.dgn

DIST.	COUNTY	ROUTE	POST MILES TOTAL PROJECT	SHEET NO.	TOTAL SHEETS
04	Sol	12,80	L1.8/L3.2, 13.4/17.2		

REGISTERED CIVIL ENGINEER DATE

REGISTERED PROFESSIONAL ENGINEER No. Exp. CIVIL STATE OF CALIFORNIA

PLANS APPROVAL DATE

The State of California or its officers or agents shall not be responsible for the accuracy or completeness of electronic copies of this plan sheet.

WMH CORPORATION
11070 White Rock Rd,
Suite 140
Rancho Cordova, CA 95670

SOLANO TRANSPORTATION AUTHORITY
423 Main Street,
SUISUN CITY, CA 94585

NOTE:

FOR ACCURATE RIGHT OF WAY DATA, CONTACT RIGHT OF WAY ENGINEERING AT THE DISTRICT OFFICE.

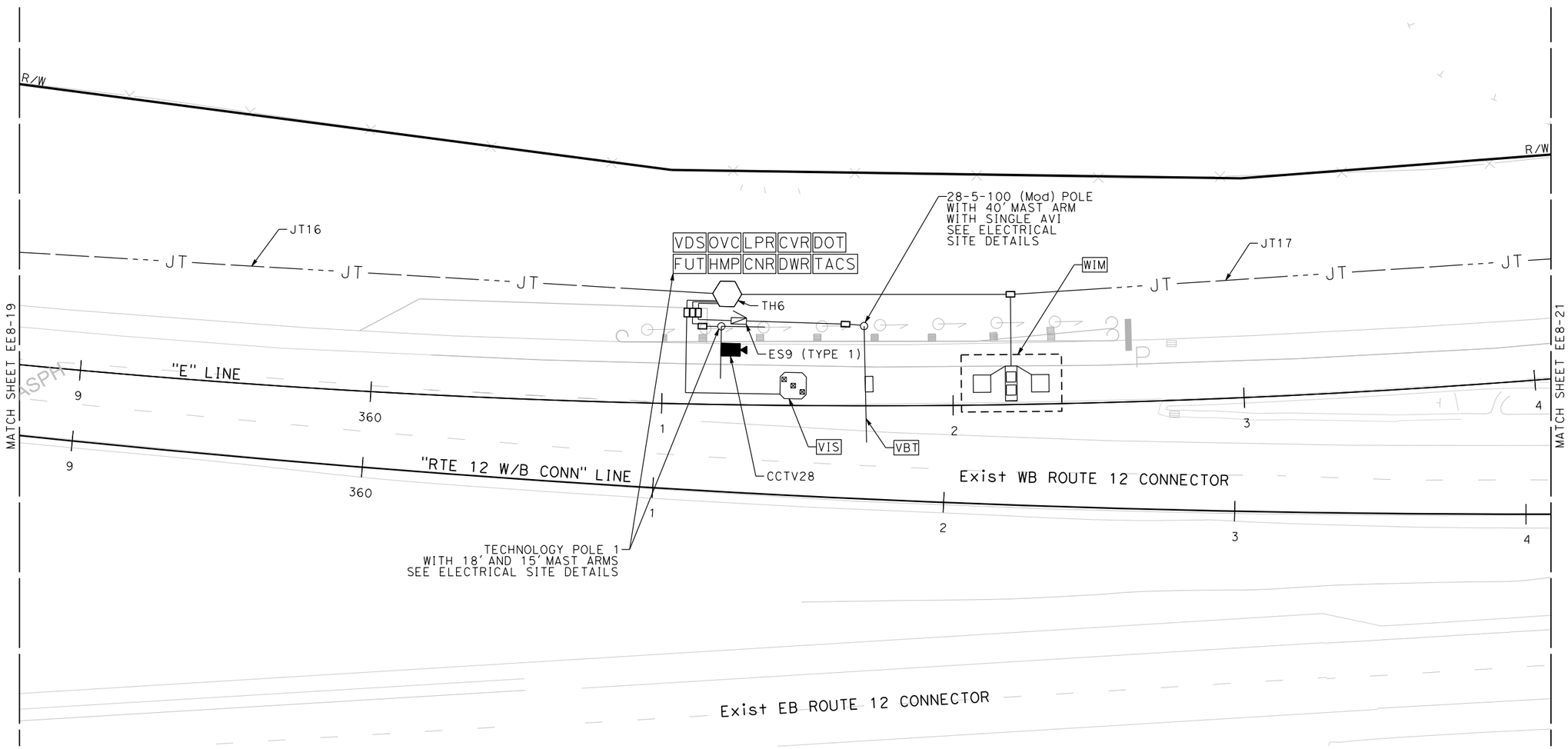

FOR NOTES, ABBREVIATIONS AND LEGEND, SEE SHEET EE8-0

SCALE: 1" = 20'

	BY	CHECKED
DESIGN	PARAS BATTH	SEAN CHARLES
DETAILS		
QUANTITIES		

PREPARED FOR THE STATE OF CALIFORNIA DEPARTMENT OF TRANSPORTATION

DIVISION OF ENGINEERING SERVICES
ARCHITECTURAL AND STRUCTURAL DESIGN

BRIDGE NO. 23W0001L
POST MILE 14.8

WESTBOUND CORDELIA CVEF

ELECTRICAL SITE
PLAN No. 20

SHEET **EE8-20**

0421000155wj0820.dgn
DOES SD imperial Rev.1/07 5/11/2023 1:46:52 PM

ORIGINAL SCALE IN INCHES FOR REDUCED PLANS 0 1 2 3

CU 0711
EA 0A53T1

DISREGARD PRINTS BEARING EARLIER REVISION DATES → 04/03/23

REVISION DATES (PRELIMINARY STAGE ONLY) SHEET OF

5/11/2023 1:46:52 PM

0421000155wj0820.dgn

DIST.	COUNTY	ROUTE	POST MILES TOTAL PROJECT	SHEET NO.	TOTAL SHEETS
04	Sol	12,80	L1.8/L3.2, 13.4/17.2		

REGISTERED CIVIL ENGINEER DATE

REGISTERED PROFESSIONAL ENGINEER No. Exp. CIVIL STATE OF CALIFORNIA

PLANS APPROVAL DATE

The State of California or its officers or agents shall not be responsible for the accuracy or completeness of electronic copies of this plan sheet.

WMH CORPORATION
11070 White Rock Rd,
Suite 140
Rancho Cordova, CA 95670

SOLANO TRANSPORTATION AUTHORITY
423 Main Street,
SUISUN CITY, CA 94585

NOTE:

FOR ACCURATE RIGHT OF WAY DATA, CONTACT RIGHT OF WAY ENGINEERING AT THE DISTRICT OFFICE.

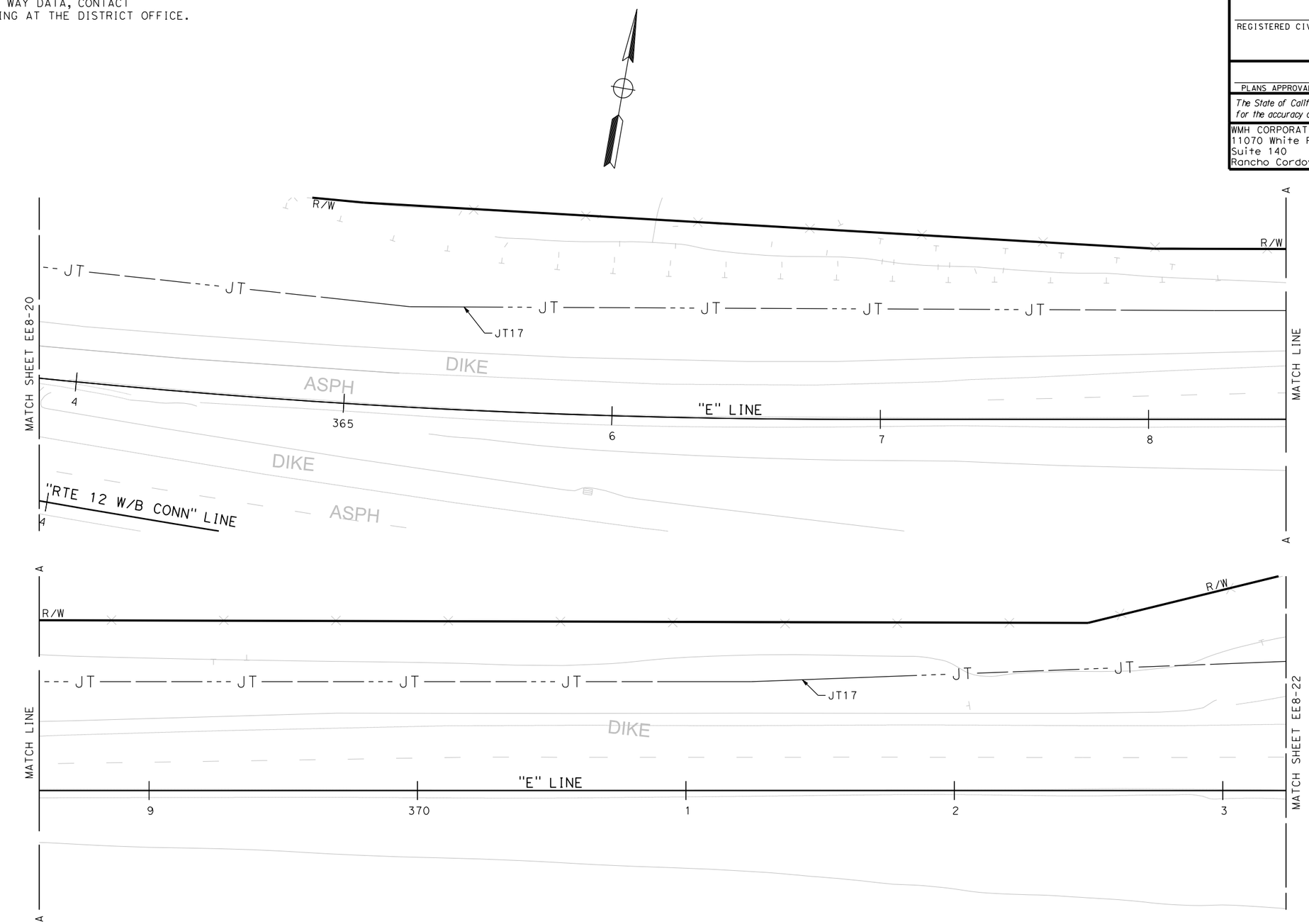

FOR NOTES, ABBREVIATIONS AND LEGEND, SEE SHEET EE8-0

SCALE: 1" = 20'

	BY	CHECKED
DESIGN	PARAS BATTH	SEAN CHARLES
DETAILS		
QUANTITIES		

PREPARED FOR THE STATE OF CALIFORNIA DEPARTMENT OF TRANSPORTATION

DIVISION OF ENGINEERING SERVICES
ARCHITECTURAL AND STRUCTURAL DESIGN

BRIDGE NO. 23W0001L
POST MILE 14.8

WESTBOUND CORDELIA CVEF

ELECTRICAL SITE PLAN No. 21

SHEET **EE8-21**

0421000155wj0821.dgn
DOES SD imperial Rev.1/07 5/11/2023 1:46:58 PM

ORIGINAL SCALE IN INCHES FOR REDUCED PLANS 0 1 2 3

CU 0711
EA 0A53T1

DISREGARD PRINTS BEARING EARLIER REVISION DATES → 04/03/23

REVISION DATES (PRELIMINARY STAGE ONLY) SHEET OF

5/11/2023 1:46:58 PM

0421000155wj0821.dgn

DIST.	COUNTY	ROUTE	POST MILES TOTAL PROJECT	SHEET NO.	TOTAL SHEETS
04	Sol	12,80	L1.8/L3.2, 13.4/17.2		

REGISTERED CIVIL ENGINEER DATE

REGISTERED PROFESSIONAL ENGINEER No. Exp. CIVIL STATE OF CALIFORNIA

PLANS APPROVAL DATE

The State of California or its officers or agents shall not be responsible for the accuracy or completeness of electronic copies of this plan sheet.

WMH CORPORATION
11070 White Rock Rd,
Suite 140
Rancho Cordova, CA 95670

SOLANO TRANSPORTATION AUTHORITY
423 Main Street,
SUISUN CITY, CA 94585

NOTE:

FOR ACCURATE RIGHT OF WAY DATA, CONTACT RIGHT OF WAY ENGINEERING AT THE DISTRICT OFFICE.

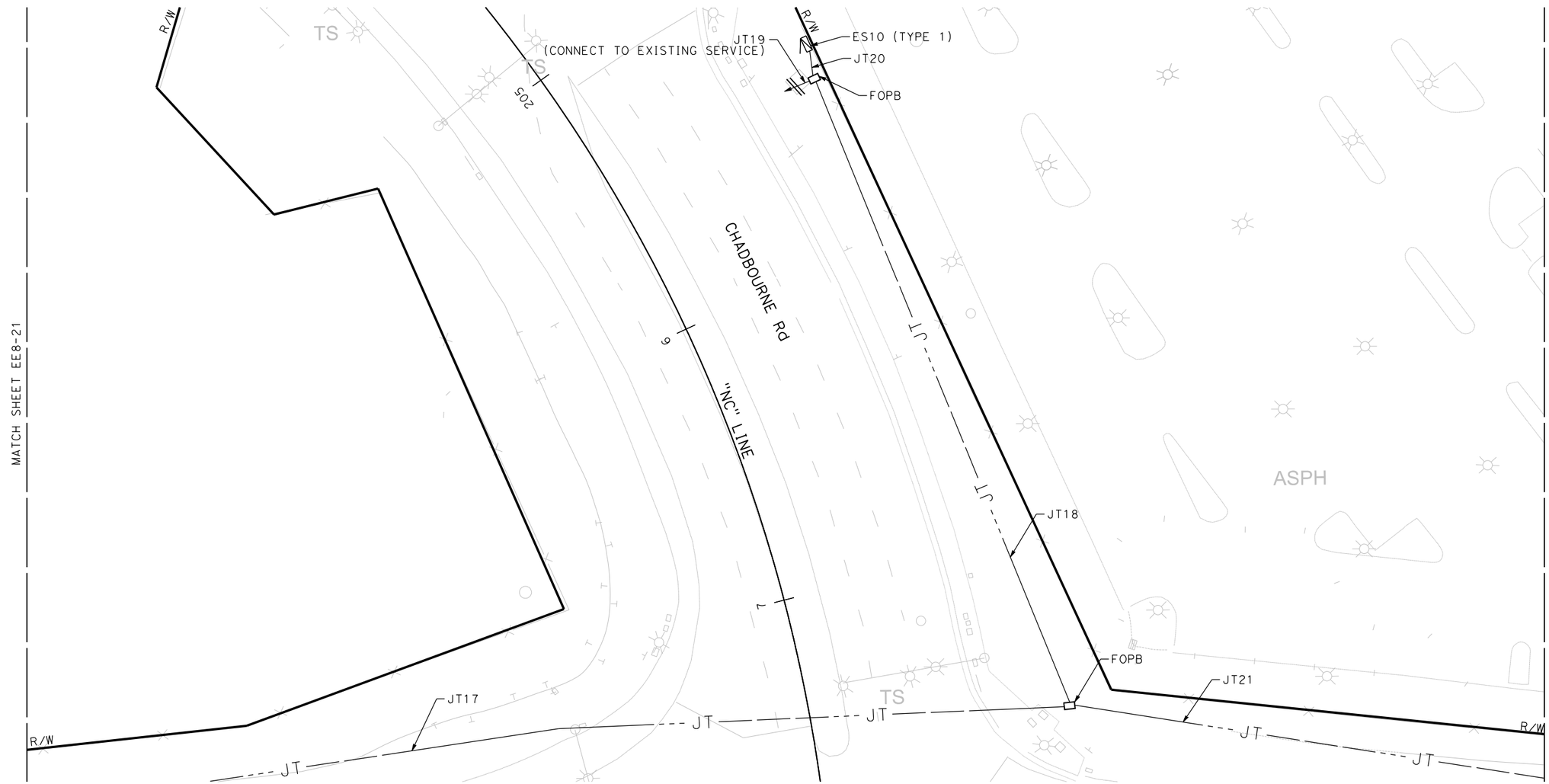

FOR NOTES, ABBREVIATIONS AND LEGEND, SEE SHEET EE8-0

SCALE: 1" = 20'

	BY	CHECKED
DESIGN	PARAS BATTH	SEAN CHARLES
DETAILS		
QUANTITIES		

PREPARED FOR THE STATE OF CALIFORNIA DEPARTMENT OF TRANSPORTATION

DIVISION OF ENGINEERING SERVICES
ARCHITECTURAL AND STRUCTURAL DESIGN

BRIDGE NO. 23W0001L
POST MILE 14.8

WESTBOUND CORDELIA CVEF

ELECTRICAL SITE PLAN No. 22

SHEET **EE8-22**

0421000155wj0822.dgn
DOES SD imperial Rev.1/07 5/11/2023 1:47:03 PM

ORIGINAL SCALE IN INCHES FOR REDUCED PLANS 0 1 2 3

CU 0711
EA 0A53T1

DISREGARD PRINTS BEARING EARLIER REVISION DATES → 04/03/23

REVISION DATES (PRELIMINARY STAGE ONLY) SHEET OF

5/11/2023 1:47:03 PM

0421000155wj0822.dgn

DIST.	COUNTY	ROUTE	POST MILES TOTAL PROJECT	SHEET NO.	TOTAL SHEETS
04	Sol	12,80	L1.8/L3.2, 13.4/17.2		

REGISTERED CIVIL ENGINEER DATE

REGISTERED PROFESSIONAL ENGINEER No. Exp. CIVIL STATE OF CALIFORNIA

PLANS APPROVAL DATE

The State of California or its officers or agents shall not be responsible for the accuracy or completeness of electronic copies of this plan sheet.

WMH CORPORATION
11070 White Rock Rd,
Suite 140
Rancho Cordova, CA 95670

SOLANO TRANSPORTATION AUTHORITY
423 Main Street,
SUISUN CITY, CA 94585

NOTE:

FOR ACCURATE RIGHT OF WAY DATA, CONTACT RIGHT OF WAY ENGINEERING AT THE DISTRICT OFFICE.

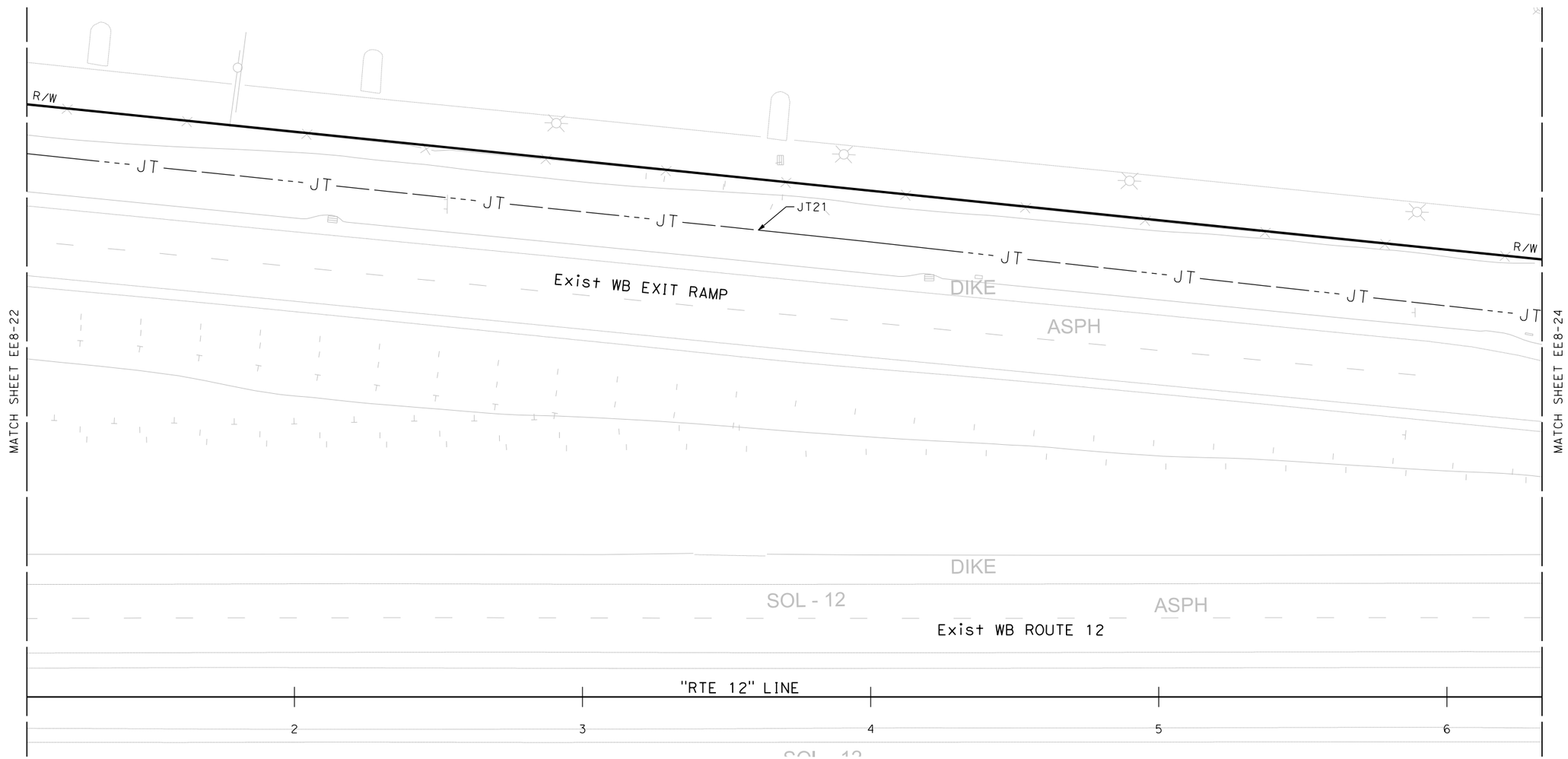

FOR NOTES, ABBREVIATIONS AND LEGEND, SEE SHEET EE8-0

SCALE: 1" = 20'

	BY	CHECKED
DESIGN	PARAS BATTH	SEAN CHARLES
DETAILS	BY	CHECKED
QUANTITIES	BY	CHECKED

PREPARED FOR THE STATE OF CALIFORNIA DEPARTMENT OF TRANSPORTATION

DIVISION OF ENGINEERING SERVICES
ARCHITECTURAL AND STRUCTURAL DESIGN

BRIDGE NO. 23W0001L
POST MILE 14.8

WESTBOUND CORDELIA CVEF

ELECTRICAL SITE PLAN No. 23

SHEET **EE8-23**

0421000155wj0823.dgn
DOES SD imperial Rev.1/07 5/11/2023 1:47:08 PM

ORIGINAL SCALE IN INCHES FOR REDUCED PLANS 0 1 2 3

CU 0711
EA 0A53T1

DISREGARD PRINTS BEARING EARLIER REVISION DATES → 04/03/23

REVISION DATES (PRELIMINARY STAGE ONLY) SHEET OF

5/11/2023 1:47:08 PM

0421000155wj0823.dgn

DIST.	COUNTY	ROUTE	POST MILES TOTAL PROJECT	SHEET NO.	TOTAL SHEETS
04	Sol	12,80	L1.8/L3.2, 13.4/17.2		

REGISTERED CIVIL ENGINEER DATE

REGISTERED PROFESSIONAL ENGINEER
No.
Exp.
CIVIL
STATE OF CALIFORNIA

PLANS APPROVAL DATE

The State of California or its officers or agents shall not be responsible for the accuracy or completeness of electronic copies of this plan sheet.

WMH CORPORATION
11070 White Rock Rd,
Suite 140
Rancho Cordova, CA 95670

SOLANO TRANSPORTATION AUTHORITY
423 Main Street,
SUISUN CITY, CA 94585

NOTE:

FOR ACCURATE RIGHT OF WAY DATA, CONTACT RIGHT OF WAY ENGINEERING AT THE DISTRICT OFFICE.

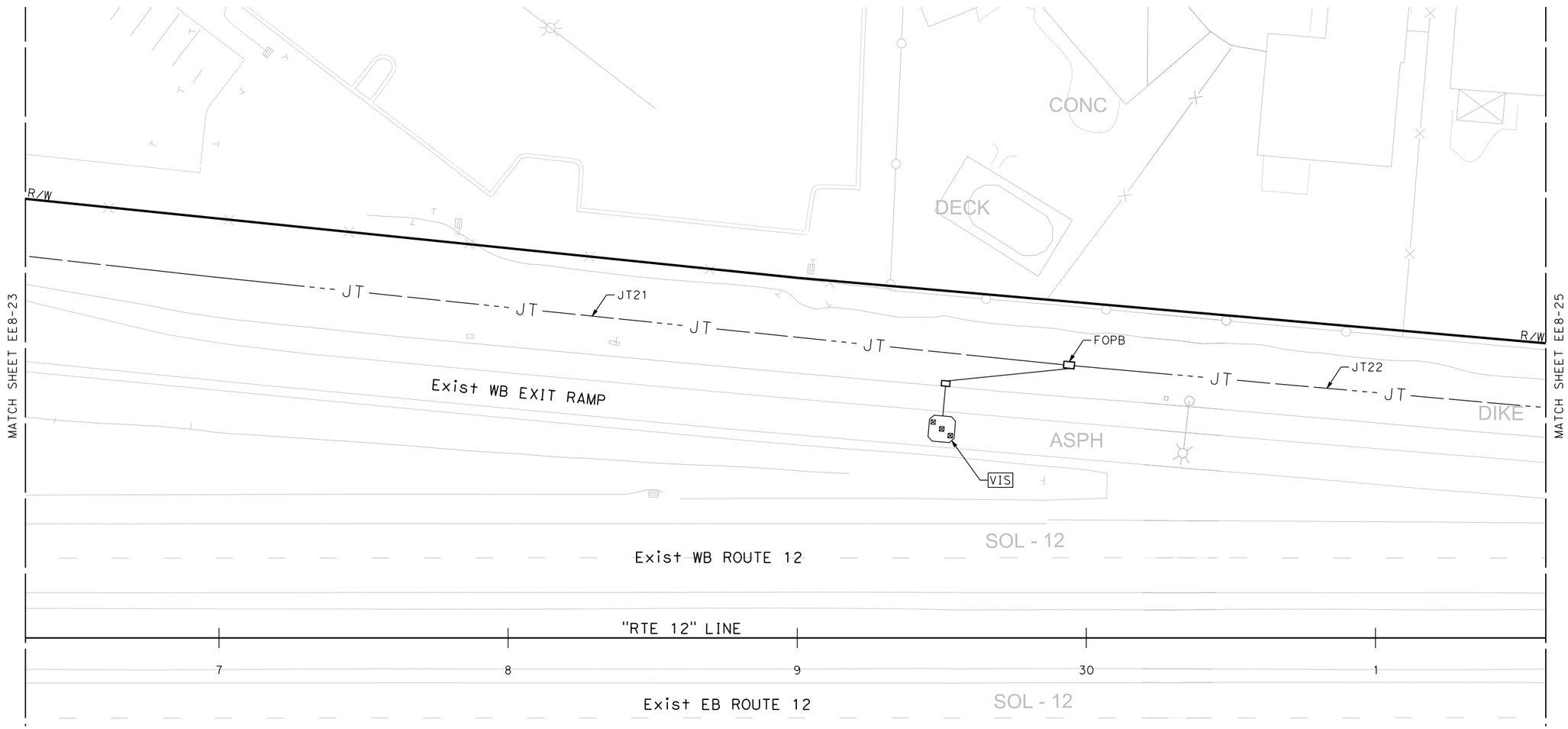

FOR NOTES, ABBREVIATIONS AND LEGEND, SEE SHEET EE8-0

SCALE: 1" = 20'

	BY	CHECKED
DESIGN	PARAS BATTH	SEAN CHARLES
DETAILS		
QUANTITIES		

PREPARED FOR THE STATE OF CALIFORNIA DEPARTMENT OF TRANSPORTATION

DIVISION OF ENGINEERING SERVICES
ARCHITECTURAL AND STRUCTURAL DESIGN

BRIDGE NO. 23W0001L
POST MILE 14.8

WESTBOUND CORDELIA CVEF

ELECTRICAL SITE PLAN No. 24

SHEET **EE8-24**

0421000155wj0824.dgn
DOES SD imperial Rev.1/07 5/11/2023 1:47:14 PM

ORIGINAL SCALE IN INCHES FOR REDUCED PLANS 0 1 2 3

CU 0711
EA 0A53T1

DISREGARD PRINTS BEARING EARLIER REVISION DATES → 04/03/23

REVISION DATES (PRELIMINARY STAGE ONLY) SHEET OF

5/11/2023 1:47:14 PM

0421000155wj0824.dgn

DIST.	COUNTY	ROUTE	POST MILES TOTAL PROJECT	SHEET NO.	TOTAL SHEETS
04	Sol	12,80	L1.8/L3.2, 13.4/17.2		

REGISTERED CIVIL ENGINEER DATE

REGISTERED PROFESSIONAL ENGINEER No. Exp. CIVIL STATE OF CALIFORNIA

PLANS APPROVAL DATE

The State of California or its officers or agents shall not be responsible for the accuracy or completeness of electronic copies of this plan sheet.

WMH CORPORATION
11070 White Rock Rd,
Suite 140
Rancho Cordova, CA 95670

SOLANO TRANSPORTATION AUTHORITY
423 Main Street,
SUISUN CITY, CA 94585

NOTE:

FOR ACCURATE RIGHT OF WAY DATA, CONTACT RIGHT OF WAY ENGINEERING AT THE DISTRICT OFFICE.

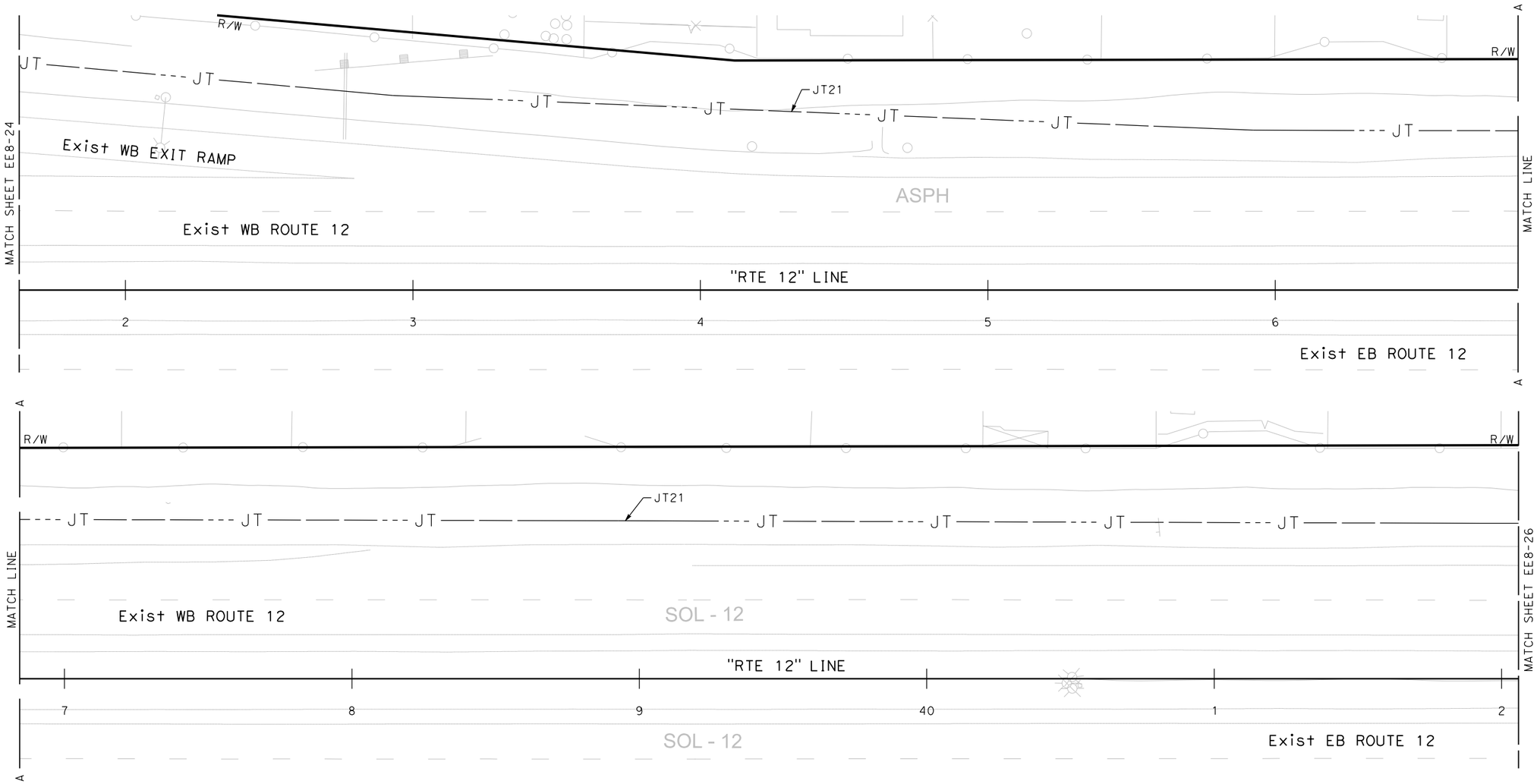

FOR NOTES, ABBREVIATIONS AND LEGEND, SEE SHEET EE8-0

SCALE: 1" = 20'

	BY	CHECKED
DESIGN	PARAS BATTH	SEAN CHARLES
DETAILS		
QUANTITIES		

PREPARED FOR THE STATE OF CALIFORNIA DEPARTMENT OF TRANSPORTATION

DIVISION OF ENGINEERING SERVICES
ARCHITECTURAL AND STRUCTURAL DESIGN

BRIDGE NO. 23W0001L
POST MILE 14.8

WESTBOUND CORDELIA CVEF

ELECTRICAL SITE PLAN No. 25

SHEET **EE8-25**

0421000155wj0825.dgn
DOES SD imperial Rev.1/07 5/11/2023 1:47:20 PM

ORIGINAL SCALE IN INCHES FOR REDUCED PLANS 0 1 2 3

CU 0711
EA 0A53T1

DISREGARD PRINTS BEARING EARLIER REVISION DATES → 04/03/23

REVISION DATES (PRELIMINARY STAGE ONLY) SHEET OF

5/11/2023 1:47:20 PM

0421000155wj0825.dgn

DIST.	COUNTY	ROUTE	POST MILES TOTAL PROJECT	SHEET NO.	TOTAL SHEETS
04	Sol	12,80	L1.8/L3.2, 13.4/17.2		

REGISTERED CIVIL ENGINEER DATE

REGISTERED PROFESSIONAL ENGINEER No. Exp. CIVIL STATE OF CALIFORNIA

PLANS APPROVAL DATE

The State of California or its officers or agents shall not be responsible for the accuracy or completeness of electronic copies of this plan sheet.

WMH CORPORATION
11070 White Rock Rd,
Suite 140
Rancho Cordova, CA 95670

SOLANO TRANSPORTATION AUTHORITY
423 Main Street,
SUISUN CITY, CA 94585

NOTE:

FOR ACCURATE RIGHT OF WAY DATA, CONTACT RIGHT OF WAY ENGINEERING AT THE DISTRICT OFFICE.

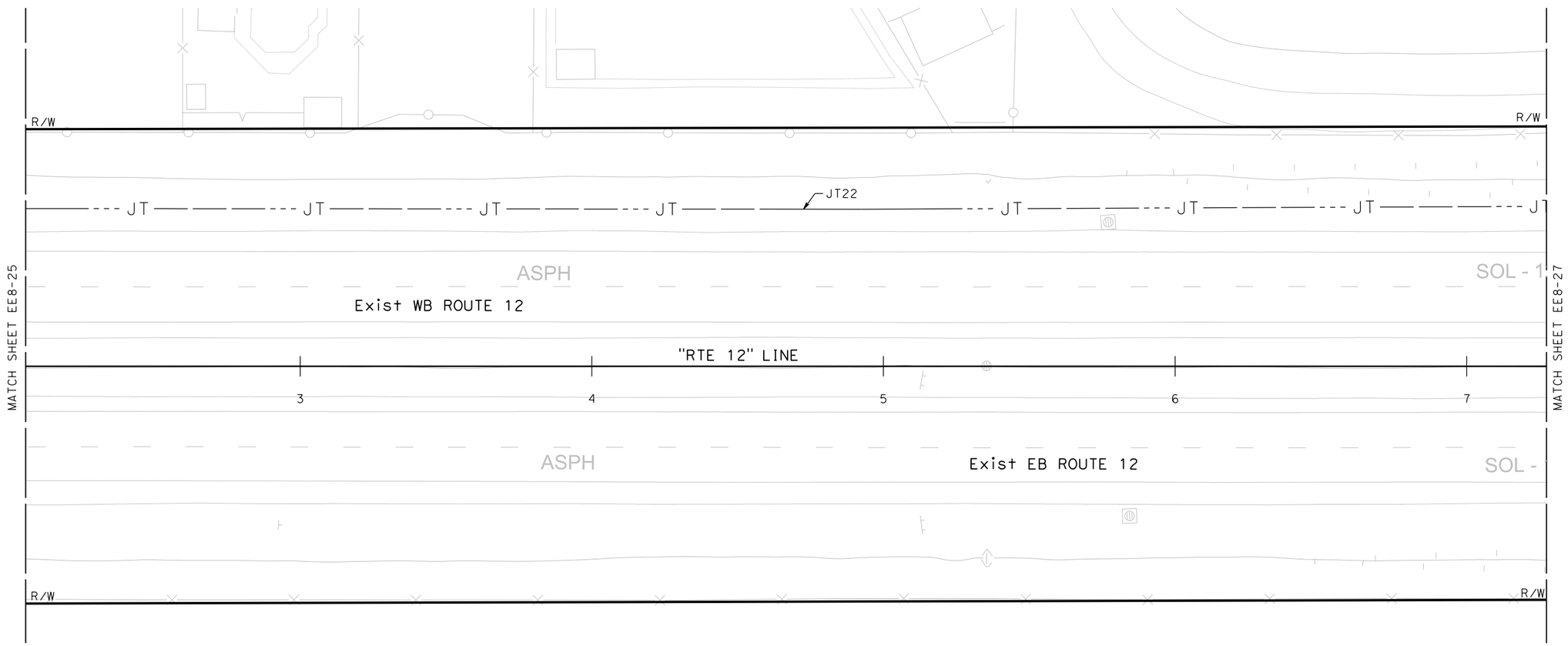

FOR NOTES, ABBREVIATIONS AND LEGEND, SEE SHEET EE8-0

SCALE: 1" = 20'

	BY	CHECKED
DESIGN	PARAS BATTH	SEAN CHARLES
DETAILS	BY	CHECKED
QUANTITIES	BY	CHECKED

PREPARED FOR THE STATE OF CALIFORNIA DEPARTMENT OF TRANSPORTATION

DIVISION OF ENGINEERING SERVICES ARCHITECTURAL AND STRUCTURAL DESIGN

BRIDGE NO. 23W0001L
POST MILE 14.8

WESTBOUND CORDELIA CVEF

ELECTRICAL SITE PLAN No. 26

SHEET EE8-26

0421000155wj0826.dgn
DOES SD imperial Rev.1/07 5/11/2023 1:47:26 PM

ORIGINAL SCALE IN INCHES FOR REDUCED PLANS 0 1 2 3

CU 0711
EA 0A53T1

DISREGARD PRINTS BEARING EARLIER REVISION DATES → 04/03/23

REVISION DATES (PRELIMINARY STAGE ONLY) SHEET OF

5/11/2023 1:47:26 PM

0421000155wj0826.dgn

DIST.	COUNTY	ROUTE	POST MILES TOTAL PROJECT	SHEET NO.	TOTAL SHEETS
04	Sol	12,80	L1.8/L3.2, 13.4/17.2		

REGISTERED CIVIL ENGINEER DATE

REGISTERED PROFESSIONAL ENGINEER No. Exp. CIVIL STATE OF CALIFORNIA

PLANS APPROVAL DATE

The State of California or its officers or agents shall not be responsible for the accuracy or completeness of electronic copies of this plan sheet.

WMH CORPORATION
11070 White Rock Rd,
Suite 140
Rancho Cordova, CA 95670

SOLANO TRANSPORTATION AUTHORITY
423 Main Street,
SUISUN CITY, CA 94585

NOTE:

FOR ACCURATE RIGHT OF WAY DATA, CONTACT RIGHT OF WAY ENGINEERING AT THE DISTRICT OFFICE.

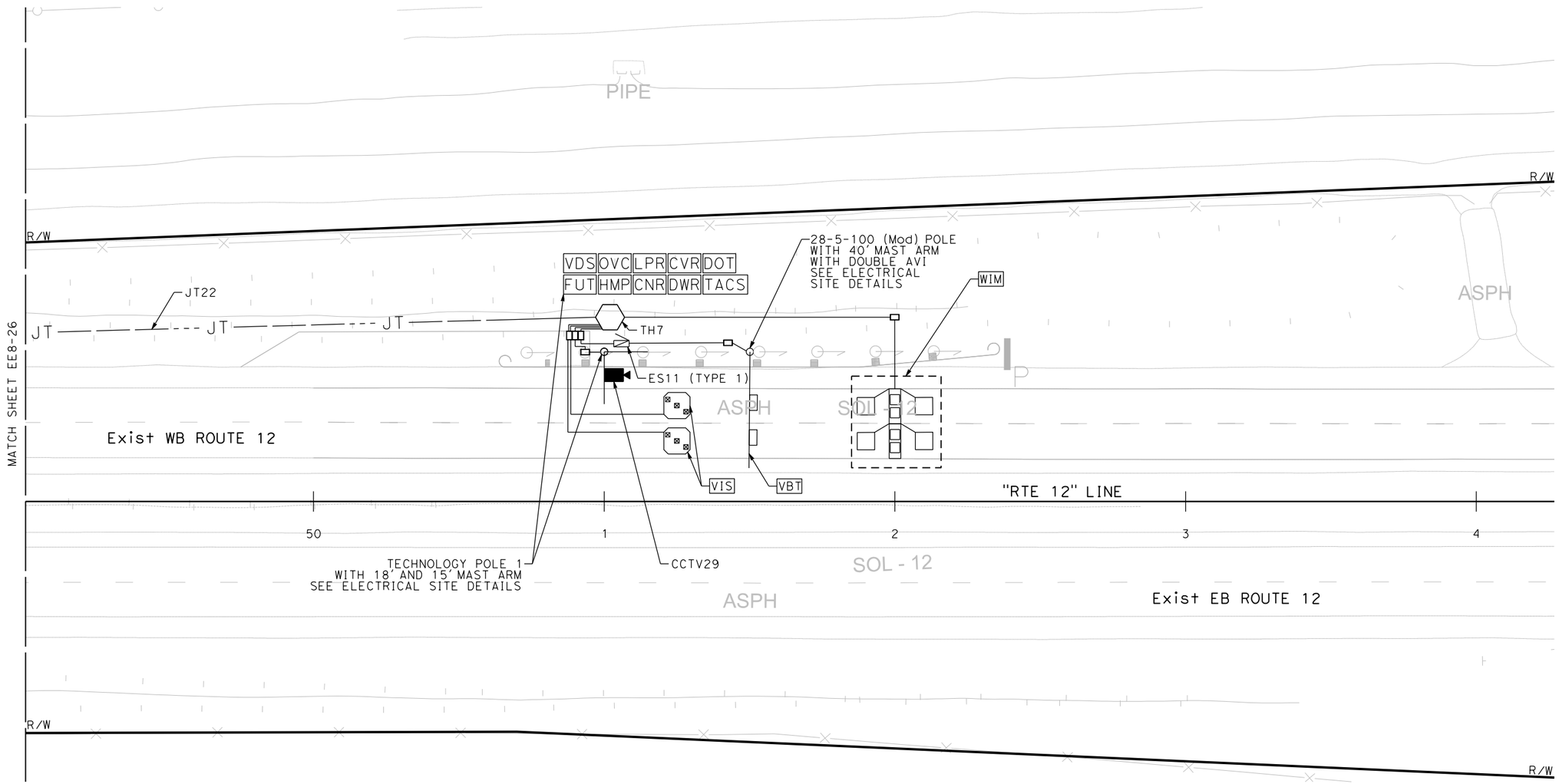

FOR NOTES, ABBREVIATIONS AND LEGEND, SEE SHEET EE8-0

SCALE: 1" = 20'

	BY	CHECKED
DESIGN	PARAS BATTH	SEAN CHARLES
DETAILS	BY	CHECKED
QUANTITIES	BY	CHECKED

PREPARED FOR THE STATE OF CALIFORNIA DEPARTMENT OF TRANSPORTATION

DIVISION OF ENGINEERING SERVICES
ARCHITECTURAL AND STRUCTURAL DESIGN

BRIDGE NO. 23W0001L
POST MILE 14.8

WESTBOUND CORDELIA CVEF

ELECTRICAL SITE PLAN No. 27

SHEET **EE8-27**

0421000155wj0827.dgn
DOES SD imperial Rev.1/07 5/11/2023 1:47:32 PM

ORIGINAL SCALE IN INCHES FOR REDUCED PLANS 0 1 2 3

CU 0711
EA 0A53T1

DISREGARD PRINTS BEARING EARLIER REVISION DATES → 04/03/23

REVISION DATES (PRELIMINARY STAGE ONLY) SHEET OF

5/11/2023 1:47:32 PM

0421000155wj0827.dgn

DIST.	COUNTY	ROUTE	POST MILES TOTAL PROJECT	SHEET NO.	TOTAL SHEETS
04	Sol	12,80	L1.8/L3.2, 13.4/17.2		

REGISTERED CIVIL ENGINEER DATE

REGISTERED PROFESSIONAL ENGINEER No. Exp. CIVIL STATE OF CALIFORNIA

PLANS APPROVAL DATE

The State of California or its officers or agents shall not be responsible for the accuracy or completeness of electronic copies of this plan sheet.

WMH CORPORATION
11070 White Rock Rd,
Suite 140
Rancho Cordova, CA 95670

SOLANO TRANSPORTATION AUTHORITY
423 Main Street,
SUISUN CITY, CA 94585

NOTES:

1. FOR ACCURATE RIGHT OF WAY DATA, CONTACT RIGHT OF WAY ENGINEERING AT THE DISTRICT OFFICE.
2. PLACE SIGNAL HEAD AND LANE IDENTIFICATION FIXED SIGN AT THE CENTER OF EACH LANE, SEE SIGN DETAIL SHEETS FOR SIGN PANEL DETAILS.

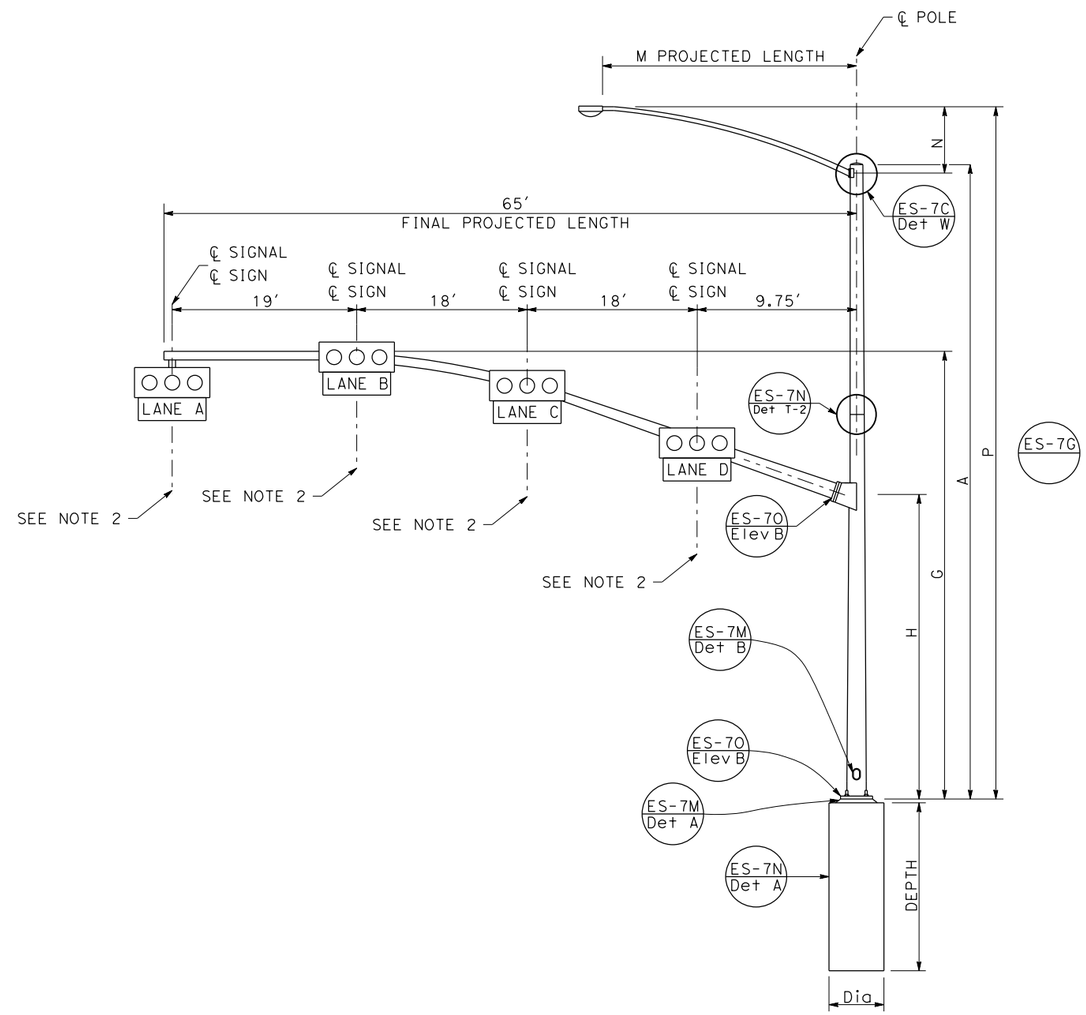

TYPE 61-5-100 (Mod)
ELEVATION

NO SCALE

DESIGN	BY PARAS BATTH	CHECKED SEAN CHARLES	PREPARED FOR THE STATE OF CALIFORNIA DEPARTMENT OF TRANSPORTATION	DIVISION OF ENGINEERING SERVICES ARCHITECTURAL AND STRUCTURAL DESIGN	BRIDGE NO. 23W0001L	WESTBOUND CORDELIA CVEF	SHEET EE11-1
DETAILS	BY	CHECKED			POST MILE 14.8	ELECTRICAL SITE DETAILS TYPE 61-5-100 (Mod) POLE	
QUANTITIES	BY	CHECKED					

0421000155wj1101.dgn
DOES SD imperial Rev.1/07 5/11/2023 1:47:38 PM

ORIGINAL SCALE IN INCHES FOR REDUCED PLANS 0 1 2 3

CU 0711
EA 0A53T1

DISREGARD PRINTS BEARING EARLIER REVISION DATES → 04/03/23

REVISION DATES (PRELIMINARY STAGE ONLY) SHEET OF

5/11/2023 1:47:38 PM

0421000155wj1101.dgn

DIST.	COUNTY	ROUTE	POST MILES TOTAL PROJECT	SHEET NO.	TOTAL SHEETS
04	Sol	12,80	L1.8/L3.2, 13.4/17.2		

REGISTERED CIVIL ENGINEER DATE

REGISTERED PROFESSIONAL ENGINEER No. Exp. CIVIL STATE OF CALIFORNIA

PLANS APPROVAL DATE

The State of California or its officers or agents shall not be responsible for the accuracy or completeness of electronic copies of this plan sheet.

WMH CORPORATION
11070 White Rock Rd,
Suite 140
Rancho Cordova, CA 95670

SOLANO TRANSPORTATION AUTHORITY
423 Main Street,
SUISUN CITY, CA 94585

NOTES:

1. FOR ACCURATE RIGHT OF WAY DATA, CONTACT RIGHT OF WAY ENGINEERING AT THE DISTRICT OFFICE.
2. PLACE DIRECTIONAL FIXED SIGN AT THE CENTER OF EACH LANE, SEE SIGN DETAIL SHEETS FOR SIGN PANEL DETAILS.

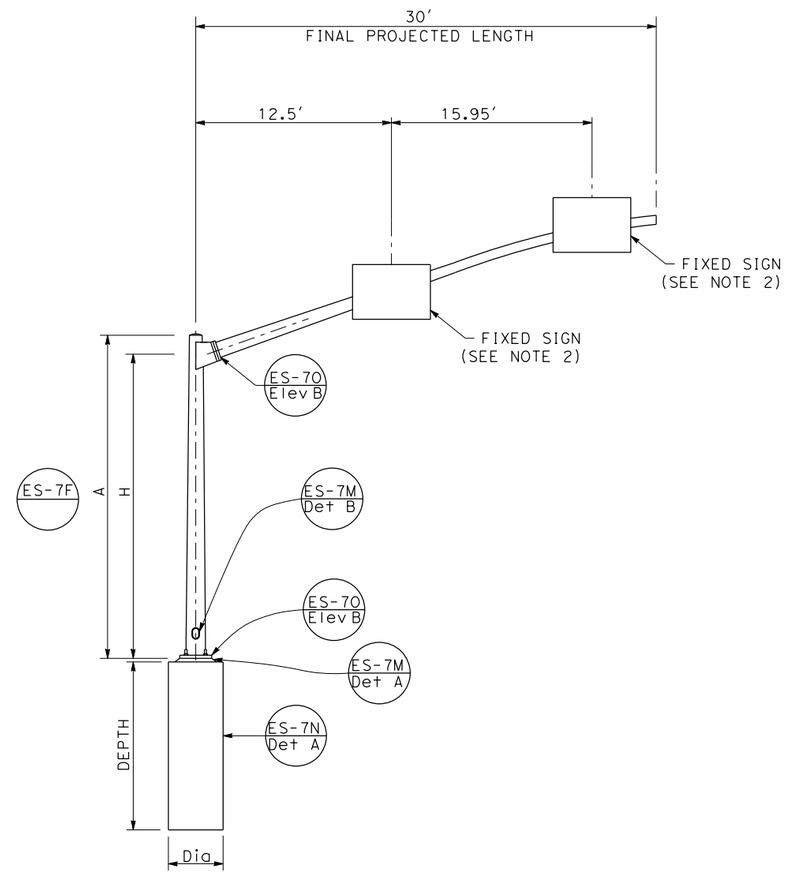

TYPE 18-2-100 (Mod)
ELEVATION

NO SCALE

DESIGN	BY PARAS BATTH	CHECKED SEAN CHARLES	
DETAILS	BY	CHECKED	
QUANTITIES	BY	CHECKED	

PREPARED FOR THE STATE OF CALIFORNIA DEPARTMENT OF TRANSPORTATION

DIVISION OF ENGINEERING SERVICES
ARCHITECTURAL AND STRUCTURAL DESIGN

BRIDGE NO. 23W0001L
POST MILE 14.8

WESTBOUND CORDELIA CVEF

ELECTRICAL SITE DETAILS
TYPE 18-2-100 (Mod) POLE

SHEET **EE11-2**

0421000155wj1102.dgn
DOES SD imperial Rev.1/07 5/11/2023 1:47:42 PM

ORIGINAL SCALE IN INCHES FOR REDUCED PLANS 0 1 2 3

CU 0711
EA 0A53T1

DISREGARD PRINTS BEARING EARLIER REVISION DATES → 04/03/23

REVISION DATES (PRELIMINARY STAGE ONLY) SHEET OF

5/11/2023 1:47:42 PM

0421000155wj1102.dgn

DIST.	COUNTY	ROUTE	POST MILES TOTAL PROJECT	SHEET NO.	TOTAL SHEETS
04	Sol	12,80	L1.8/L3.2, 13.4/17.2		

REGISTERED CIVIL ENGINEER DATE

REGISTERED PROFESSIONAL ENGINEER No. Exp. CIVIL STATE OF CALIFORNIA

PLANS APPROVAL DATE

The State of California or its officers or agents shall not be responsible for the accuracy or completeness of electronic copies of this plan sheet.

WMH CORPORATION
11070 White Rock Rd,
Suite 140
Rancho Cordova, CA 95670

SOLANO TRANSPORTATION AUTHORITY
423 Main Street,
SUISUN CITY, CA 94585

NOTES:

1. FOR ACCURATE RIGHT OF WAY DATA, CONTACT RIGHT OF WAY ENGINEERING AT THE DISTRICT OFFICE.
2. PLACE VMS SIGN AND LANE IDENTIFICATION FIXED SIGN AT THE CENTER OF EACH LANE, SEE SIGN DETAIL SHEETS FOR SIGN PANEL DETAILS.

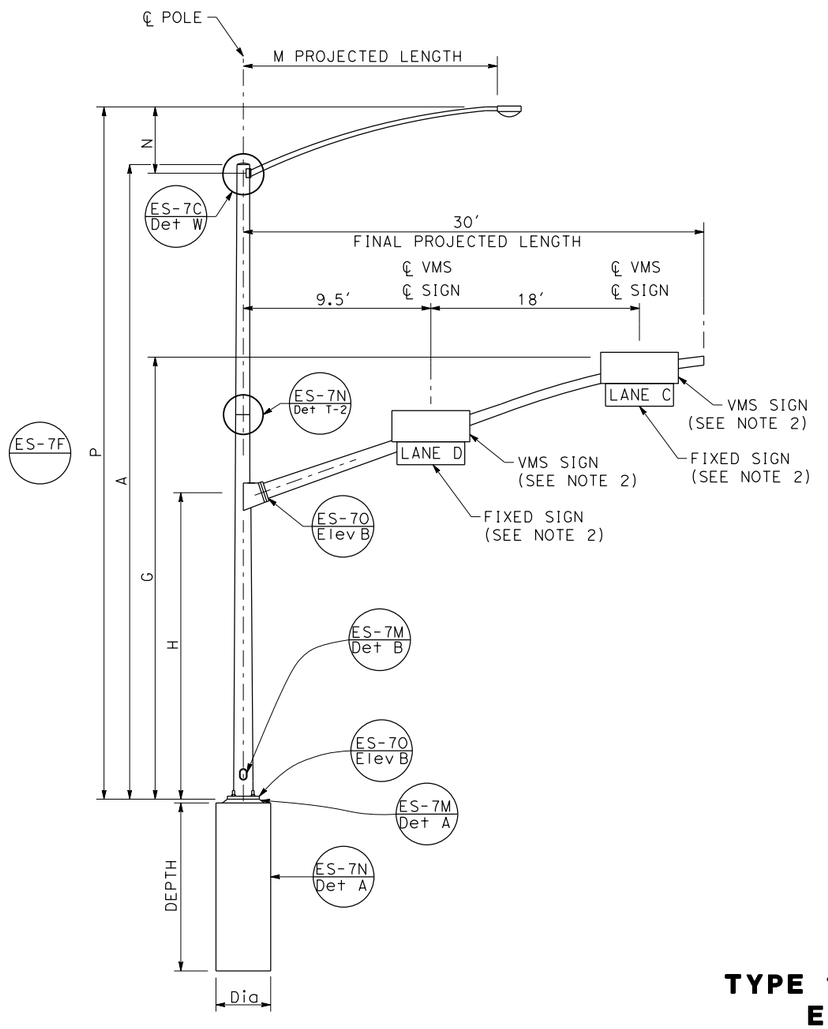

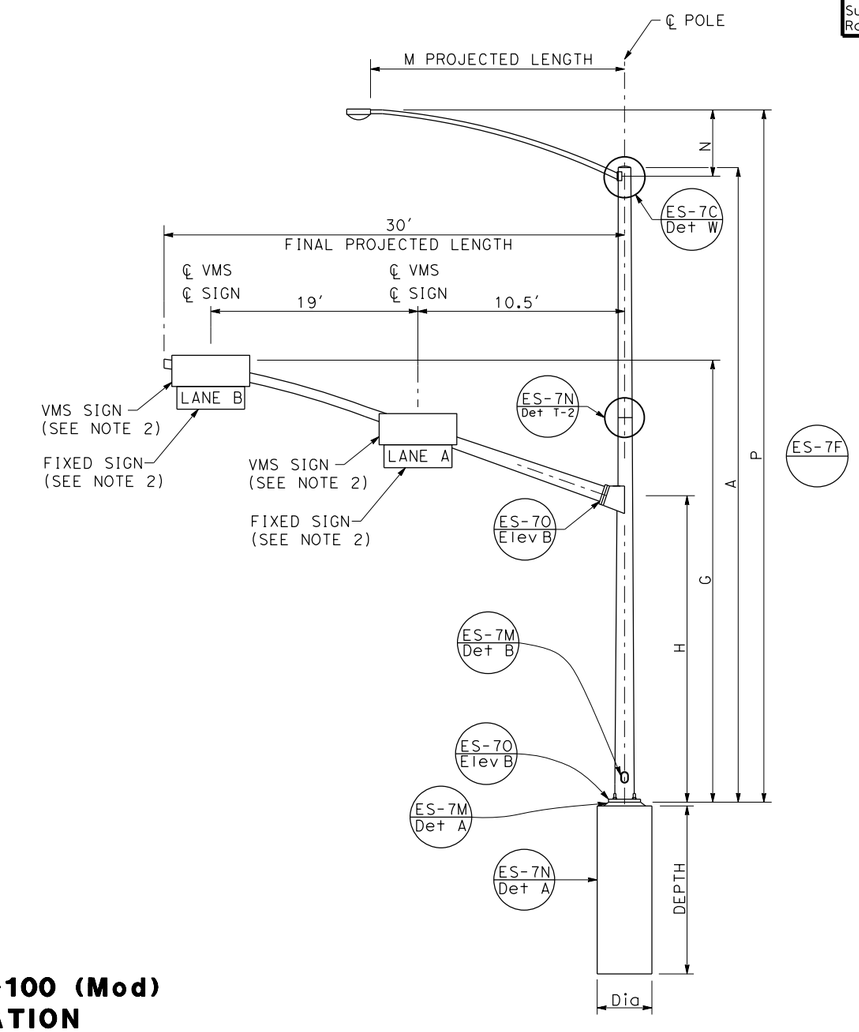

TYPE 19-4-100 (Mod)
ELEVATION

NO SCALE

DESIGN	BY PARAS BATTH	CHECKED SEAN CHARLES	
DETAILS	BY	CHECKED	
QUANTITIES	BY	CHECKED	

PREPARED FOR THE STATE OF CALIFORNIA DEPARTMENT OF TRANSPORTATION

DIVISION OF ENGINEERING SERVICES
ARCHITECTURAL AND STRUCTURAL DESIGN

BRIDGE NO. 23W0001L
POST MILE 14.8

WESTBOUND CORDELIA CVEF

ELECTRICAL SITE DETAILS
TYPE 19-4-100 (Mod) POLE

SHEET **EE11-3**

0421000155wj1103.dgn
DOES SD imperial Rev.1/07 5/11/2023 1:47:47 PM

ORIGINAL SCALE IN INCHES FOR REDUCED PLANS 0 1 2 3

CU 0711
EA 0A53T1

DISREGARD PRINTS BEARING EARLIER REVISION DATES → 04/03/23

REVISION DATES (PRELIMINARY STAGE ONLY) SHEET OF

5/11/2023 1:47:47 PM
0421000155wj1103.dgn

DIST.	COUNTY	ROUTE	POST MILES TOTAL PROJECT	SHEET NO.	TOTAL SHEETS
04	Sol	12,80	L1.8/L3.2, 13.4/17.2		

REGISTERED CIVIL ENGINEER DATE

REGISTERED PROFESSIONAL ENGINEER No. Exp. CIVIL STATE OF CALIFORNIA

PLANS APPROVAL DATE

The State of California or its officers or agents shall not be responsible for the accuracy or completeness of electronic copies of this plan sheet.

WMH CORPORATION
11070 White Rock Rd,
Suite 140
Rancho Cordova, CA 95670

SOLANO TRANSPORTATION AUTHORITY
423 Main Street,
SUISUN CITY, CA 94585

NOTES:

FOR ACCURATE RIGHT OF WAY DATA, CONTACT RIGHT OF WAY ENGINEERING AT THE DISTRICT OFFICE.

TECHNOLOGY POLE 1 EQUIPMENT

CA NUMBER READER (FURNISHED AND INSTALLED BY OTHERS)	HAZ-MAT PLACARD READER (FURNISHED AND INSTALLED BY OTHERS)
CVSA DECAL READER (FURNISHED AND INSTALLED BY OTHERS)	LICENSE PLATE READER (FURNISHED AND INSTALLED BY OTHERS)
DOT NUMBER READER (FURNISHED AND INSTALLED BY OTHERS)	OVERVIEW CAMERA (FURNISHED AND INSTALLED BY OTHERS)
DECLARED WEIGHT DECAL READER (FURNISHED AND INSTALLED BY OTHERS)	TIRE ANOMALY AND CLASSIFICATION SYSTEM (FURNISHED AND INSTALLED BY OTHERS)
FUTURE TECHNOLOGY (FURNISHED AND INSTALLED BY OTHERS)	VEHICLE DIMENSION SCANNER (FURNISHED AND INSTALLED BY OTHERS)

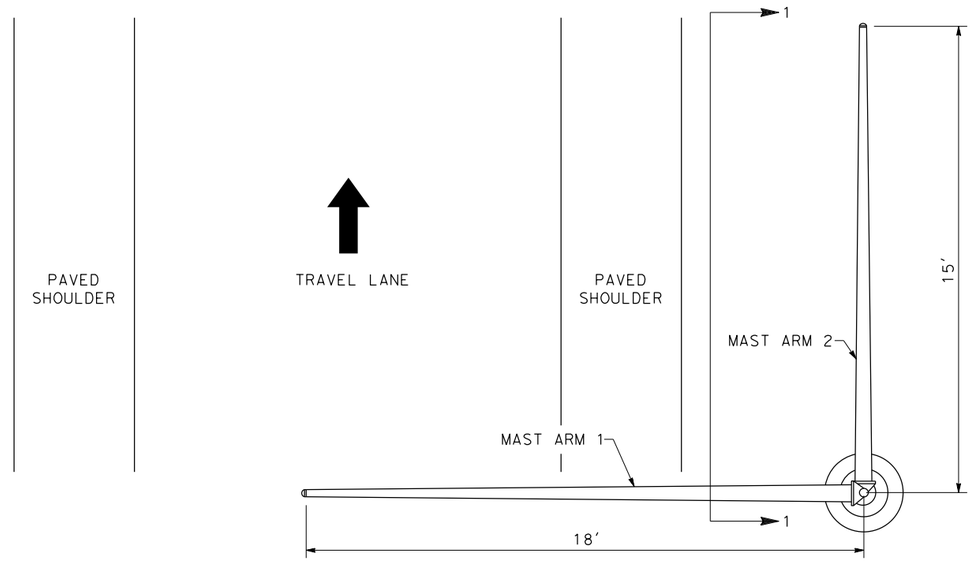

TOP VIEW

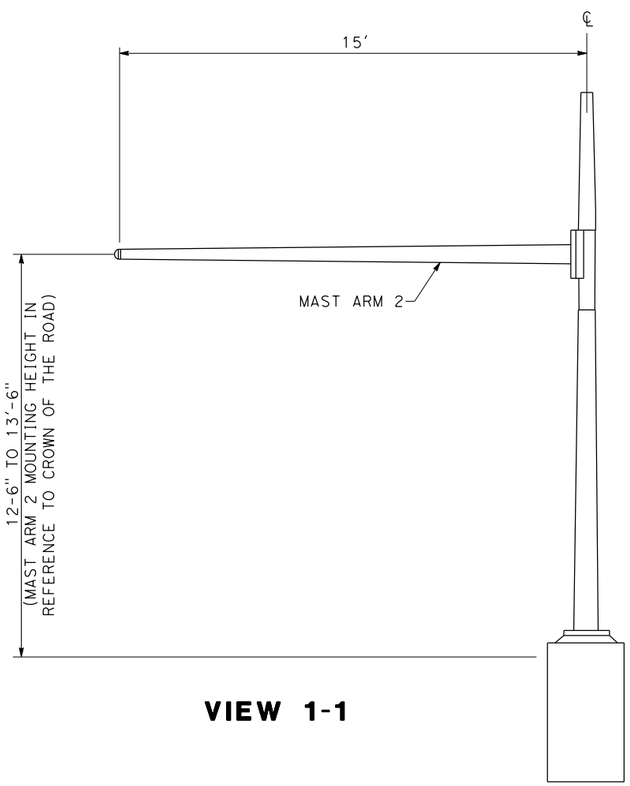

VIEW 1-1

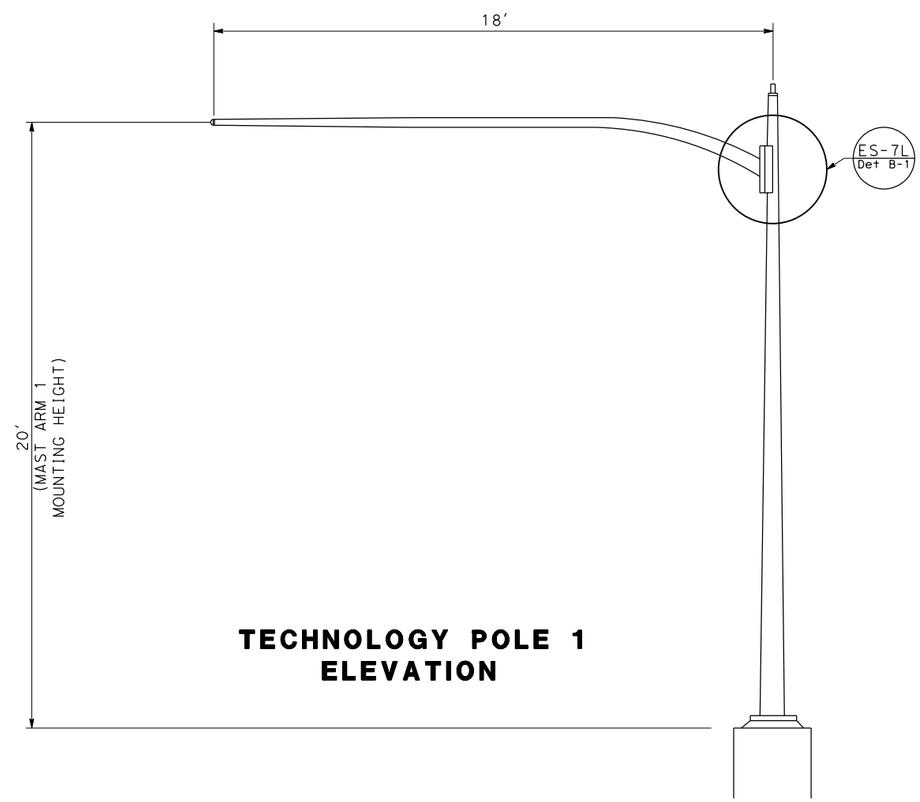

TECHNOLOGY POLE 1 ELEVATION

NO SCALE

DESIGN	BY PARAS BATTH	CHECKED SEAN CHARLES	
DETAILS	BY	CHECKED	
QUANTITIES	BY	CHECKED	

PREPARED FOR THE STATE OF CALIFORNIA DEPARTMENT OF TRANSPORTATION

DIVISION OF ENGINEERING SERVICES
ARCHITECTURAL AND STRUCTURAL DESIGN

BRIDGE NO. 23W0001L
POST MILE 14.8

WESTBOUND CORDELIA CVEF

ELECTRICAL SITE DETAILS
TECHNOLOGY POLE 1

SHEET **EE11-4**

0421000155wj1104.dgn
DOES SD imperial Rev.1/07 5/11/2023 1:47:51 PM

ORIGINAL SCALE IN INCHES FOR REDUCED PLANS 0 1 2 3

CU 0711
EA 0A53T1

DISREGARD PRINTS BEARING EARLIER REVISION DATES → 04/03/23

REVISION DATES (PRELIMINARY STAGE ONLY) SHEET OF

5/11/2023 1:47:51 PM

0421000155wj1104.dgn

DIST.	COUNTY	ROUTE	POST MILES TOTAL PROJECT	SHEET NO.	TOTAL SHEETS
04	Sol	12,80	L1.8/L3.2, 13.4/17.2		

REGISTERED CIVIL ENGINEER DATE

REGISTERED PROFESSIONAL ENGINEER No. Exp. CIVIL STATE OF CALIFORNIA

PLANS APPROVAL DATE

The State of California or its officers or agents shall not be responsible for the accuracy or completeness of electronic copies of this plan sheet.

WMH CORPORATION
11070 White Rock Rd,
Suite 140
Rancho Cordova, CA 95670

SOLANO TRANSPORTATION AUTHORITY
423 Main Street,
SUISUN CITY, CA 94585

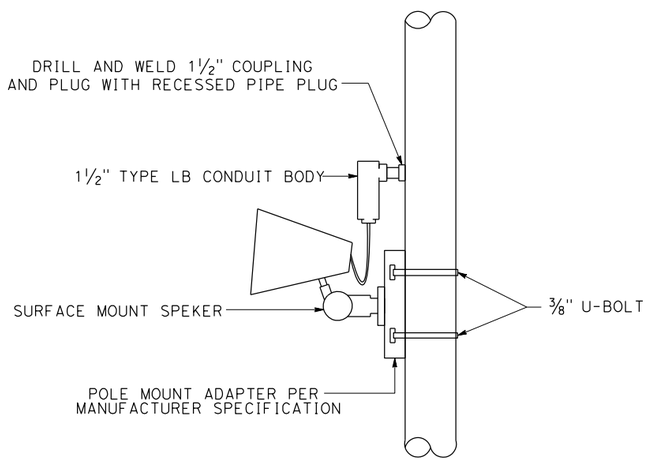

5 SPEAKER MOUNTING DETAILS

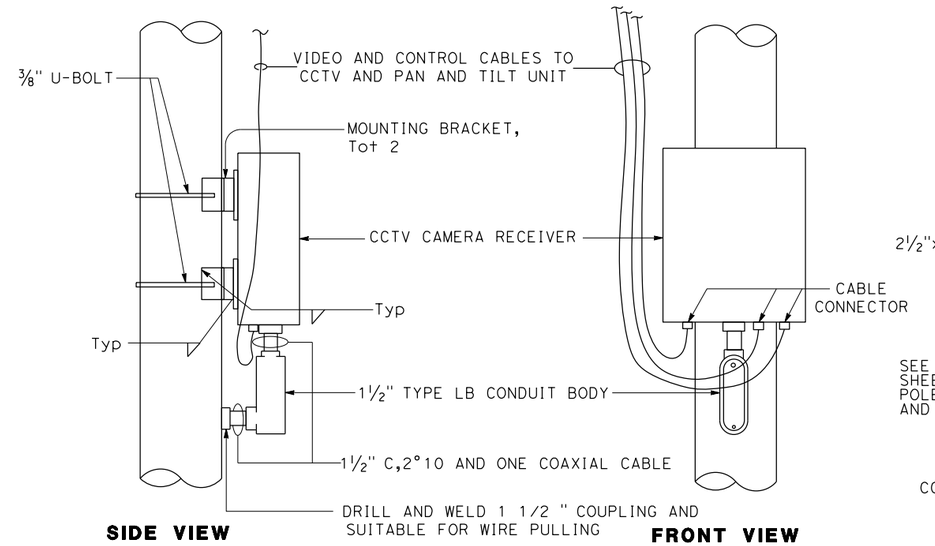

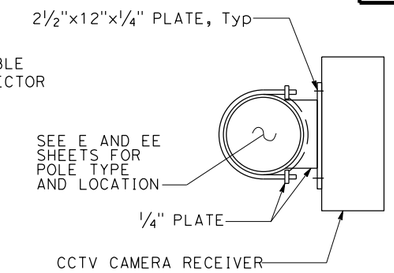

4 CCTV CAMERA RECEIVER MOUNTING DETAILS (POLE)

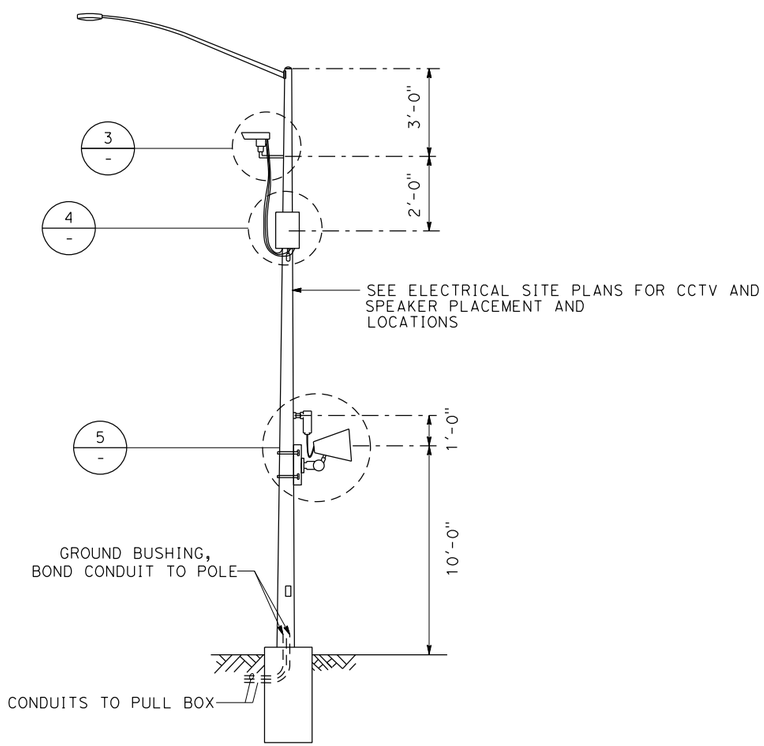

1 CCTV CAMERA AND SPEAKER MOUNTING LOCATIONS

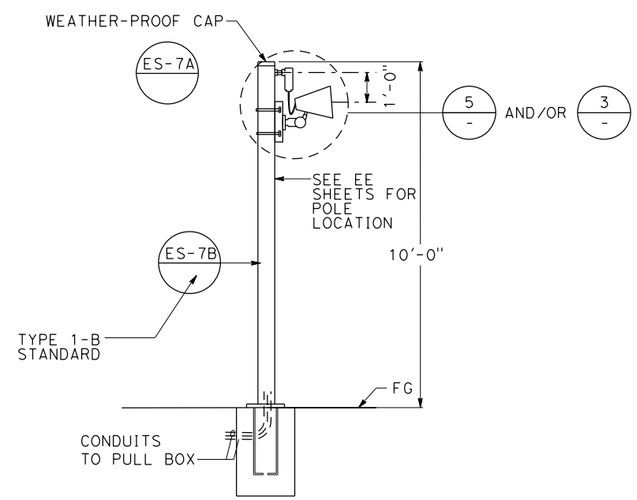

2 SPEAKER POLE

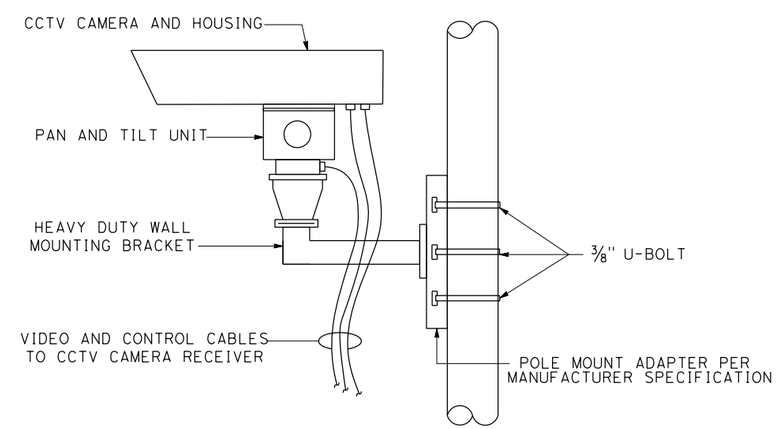

3 CCTV CAMERA MOUNTING DETAILS

NO SCALE

DESIGN	BY PARAS BATTH	CHECKED SEAN CHARLES	
DETAILS	BY	CHECKED	
QUANTITIES	BY	CHECKED	

PREPARED FOR THE STATE OF CALIFORNIA DEPARTMENT OF TRANSPORTATION

DIVISION OF ENGINEERING SERVICES ARCHITECTURAL AND STRUCTURAL DESIGN

BRIDGE NO. 23W0001L
POST MILE 14.8

WESTBOUND CORDELIA CVEF

ELECTRICAL SITE DETAILS
CCTV MOUNTING AND SPEAKER POLE

SHEET **EE11-5**

0421000155wj1105.dgn
DOES SD imperial Rev.1/07 5/11/2023 1:47:56 PM

ORIGINAL SCALE IN INCHES FOR REDUCED PLANS 0 1 2 3

CU 0711
EA 0A53T1

DISREGARD PRINTS BEARING EARLIER REVISION DATES → 04/03/23

REVISION DATES (PRELIMINARY STAGE ONLY) SHEET OF

5/11/2023 1:47:56 PM

0421000155wj1105.dgn

DIST.	COUNTY	ROUTE	POST MILES TOTAL PROJECT	SHEET NO.	TOTAL SHEETS
04	Sol	12,80	L1.8/L3.2, 13.4/17.2		

REGISTERED CIVIL ENGINEER DATE

REGISTERED PROFESSIONAL ENGINEER No. Exp. CIVIL STATE OF CALIFORNIA

PLANS APPROVAL DATE

The State of California or its officers or agents shall not be responsible for the accuracy or completeness of electronic copies of this plan sheet.

WMH CORPORATION
11070 White Rock Rd,
Suite 140
Rancho Cordova, CA 95670

SOLANO TRANSPORTATION AUTHORITY
423 Main Street,
SUISUN CITY, CA 94585

NOTES:

1. CONSOLE; NEMA TYPE 12, 14 GAUGE STEEL. ANSI 61 GRAY POWDER COATED FINISH.
2. PROVIDE DRY CONTACT FOR EACH POSITION FOR REMOTE WIRING (TYP).

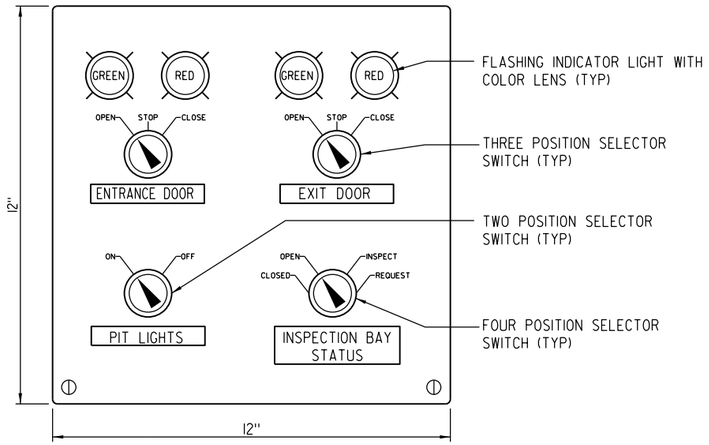

TOP COVER VIEW
TYPE A

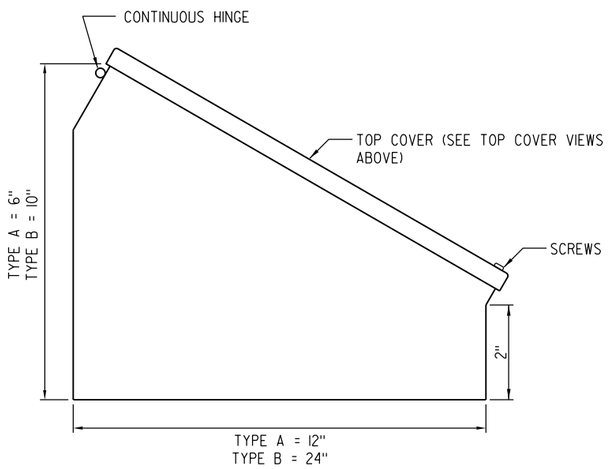

SIDE VIEW

PANEL DETAIL

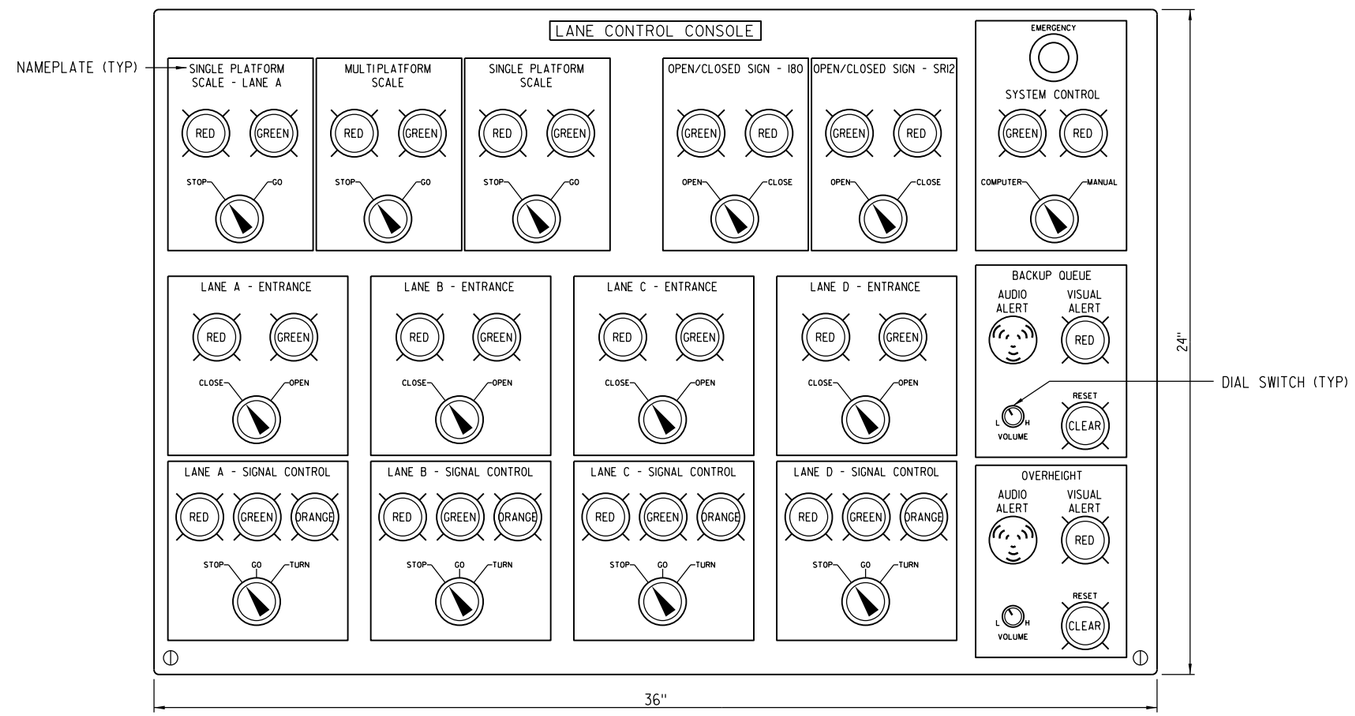

TOP COVER VIEW
TYPE B

NO SCALE

DESIGN	BY PARAS BATTH	CHECKED SEAN CHARLES	
DETAILS	BY	CHECKED	
QUANTITIES	BY	CHECKED	

PREPARED FOR THE STATE OF CALIFORNIA DEPARTMENT OF TRANSPORTATION

DIVISION OF ENGINEERING SERVICES
ARCHITECTURAL AND STRUCTURAL DESIGN

BRIDGE NO. 23W0001L
POST MILE 14.8

WESTBOUND CORDELIA CVEF

ELECTRICAL SITE DETAILS
CONTROL CONSOLES

SHEET **EE11-6**

0421000155wj1106.dgn
DOES SD imperial Rev.1/07 5/11/2023 1:48:01 PM

ORIGINAL SCALE IN INCHES FOR REDUCED PLANS 0 1 2 3

CU 0711
EA 0A53T1

DISREGARD PRINTS BEARING EARLIER REVISION DATES → 04/03/23

REVISION DATES (PRELIMINARY STAGE ONLY) SHEET OF

5/11/2023 1:48:01 PM

0421000155wj1106.dgn

DIST.	COUNTY	ROUTE	POST MILES TOTAL PROJECT	SHEET NO.	TOTAL SHEETS
04	Sol	12,80	L1.8/L3.2, 13.4/17.2		

REGISTERED CIVIL ENGINEER DATE

REGISTERED PROFESSIONAL ENGINEER No. Exp. CIVIL STATE OF CALIFORNIA

PLANS APPROVAL DATE

The State of California or its officers or agents shall not be responsible for the accuracy or completeness of electronic copies of this plan sheet.

WMH CORPORATION
11070 White Rock Rd,
Suite 140
Rancho Cordova, CA 95670

SOLANO TRANSPORTATION AUTHORITY
423 Main Street,
SUISUN CITY, CA 94585

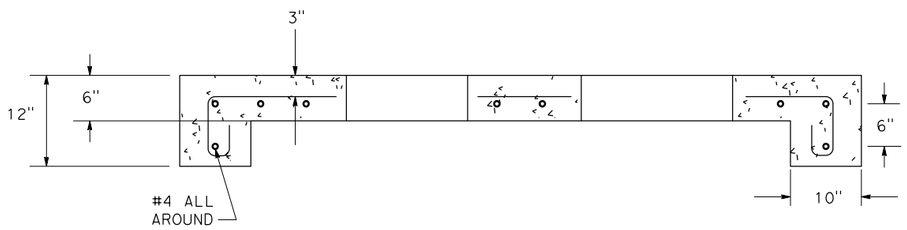

SECTION A-A

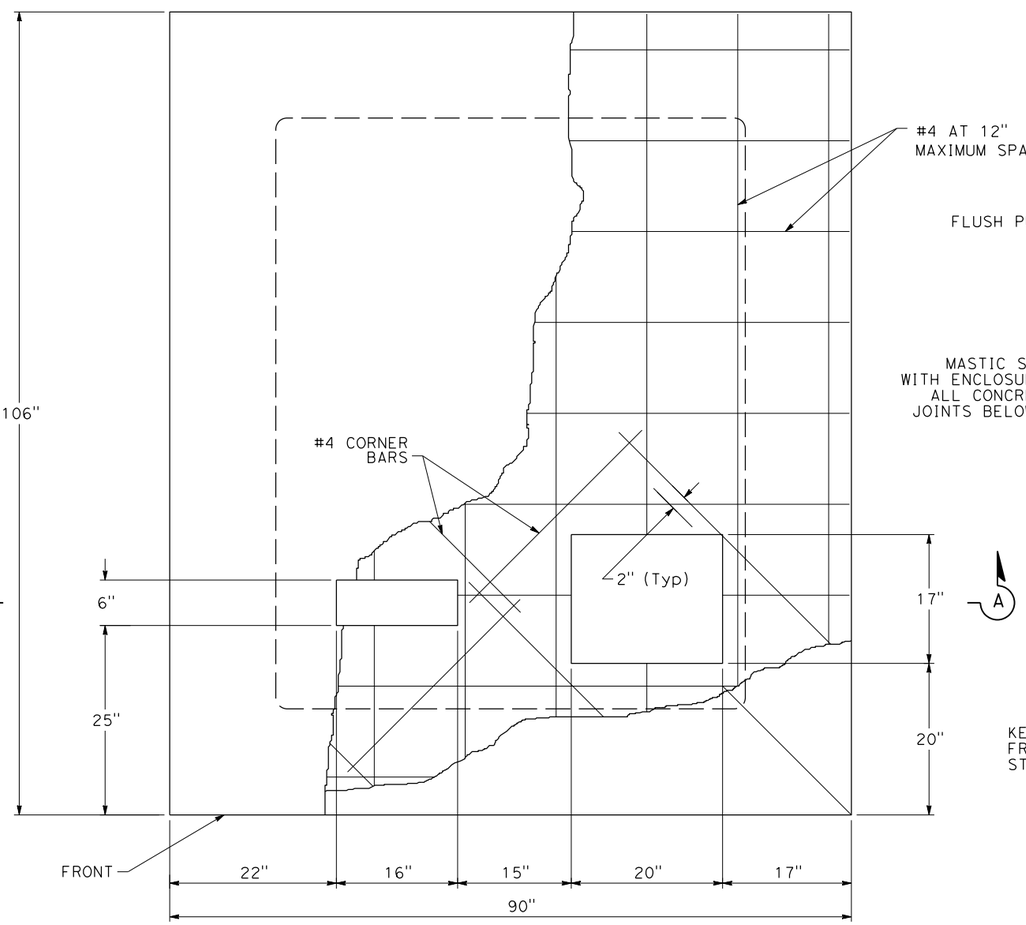

PLAN

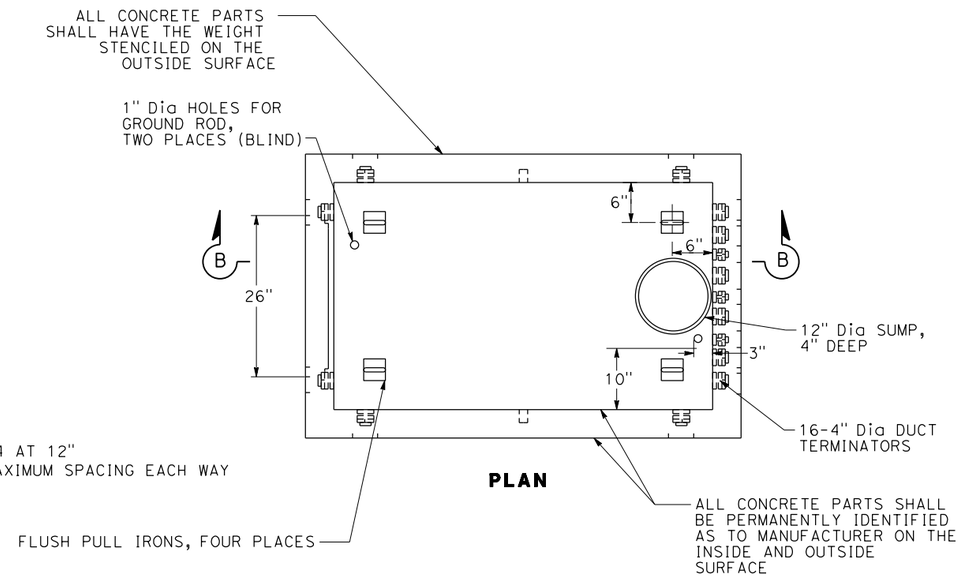

PLAN

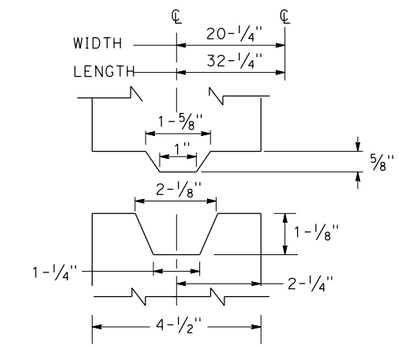

DETAIL A
TONGUE AND GROOVE

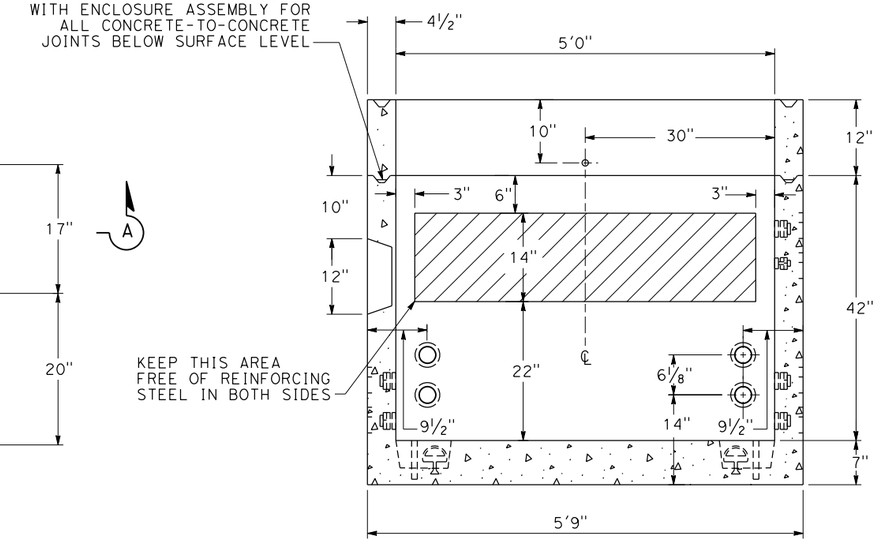

SECTION B-B

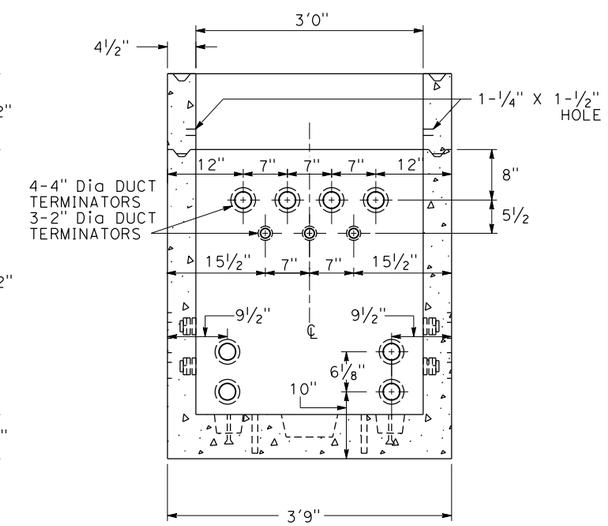

END VIEW

TRANSFORMER PAD DETAIL

ELECTRICAL VAULT DETAILS

NO SCALE

DESIGN	BY PARAS BATTH	CHECKED SEAN CHARLES	
DETAILS	BY	CHECKED	
QUANTITIES	BY	CHECKED	

PREPARED FOR THE STATE OF CALIFORNIA DEPARTMENT OF TRANSPORTATION

DIVISION OF ENGINEERING SERVICES
ARCHITECTURAL AND STRUCTURAL DESIGN

BRIDGE NO. 23W0001L
POST MILE 14.8

WESTBOUND CORDELIA CVEF

ELECTRICAL SITE DETAILS
TRANSFORMER PAD AND ELECTRICAL VAULT

SHEET **EE11-7**

0421000155wj1107.dgn
DOES SD imperial Rev.1/07 5/11/2023 1:48:05 PM

ORIGINAL SCALE IN INCHES FOR REDUCED PLANS 0 1 2 3

CU 0711
EA 0A53T1

DISREGARD PRINTS BEARING EARLIER REVISION DATES → 04/03/23

REVISION DATES (PRELIMINARY STAGE ONLY) SHEET OF

5/11/2023 1:48:05 PM

0421000155wj1107.dgn

DIST.	COUNTY	ROUTE	POST MILES TOTAL PROJECT	SHEET NO.	TOTAL SHEETS
04	Sol	12,80	L1.8/L3.2, 13.4/17.2		

REGISTERED CIVIL ENGINEER DATE

REGISTERED PROFESSIONAL ENGINEER No. Exp. CIVIL STATE OF CALIFORNIA

PLANS APPROVAL DATE

The State of California or its officers or agents shall not be responsible for the accuracy or completeness of electronic copies of this plan sheet.

WMH CORPORATION
11070 White Rock Rd,
Suite 140
Rancho Cordova, CA 95670

SOLANO TRANSPORTATION AUTHORITY
423 Main Street,
SUISUN CITY, CA 94585

NOTE:

PHYSICALLY SEPARATE POWER FROM COMMUNICATION WITHIN VAULT

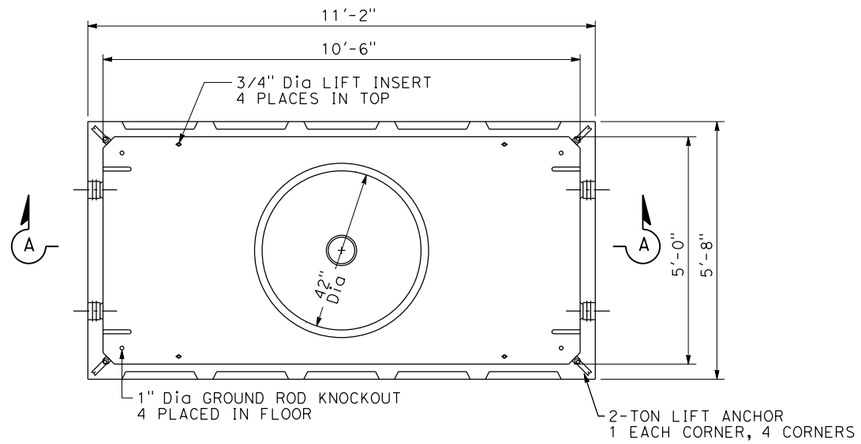

PLAN VIEW

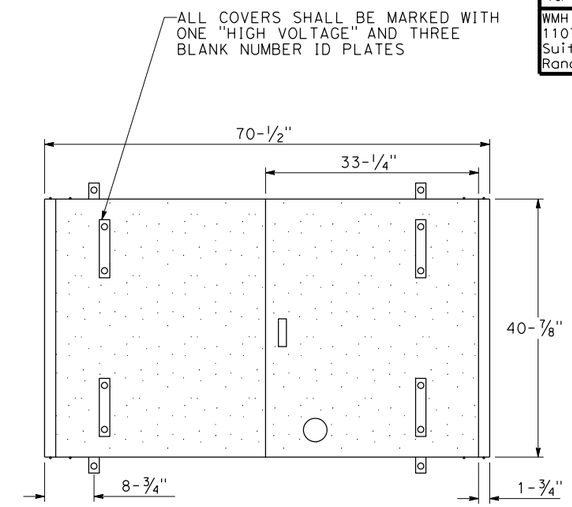

PLAN

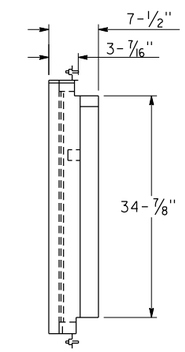

END VIEW

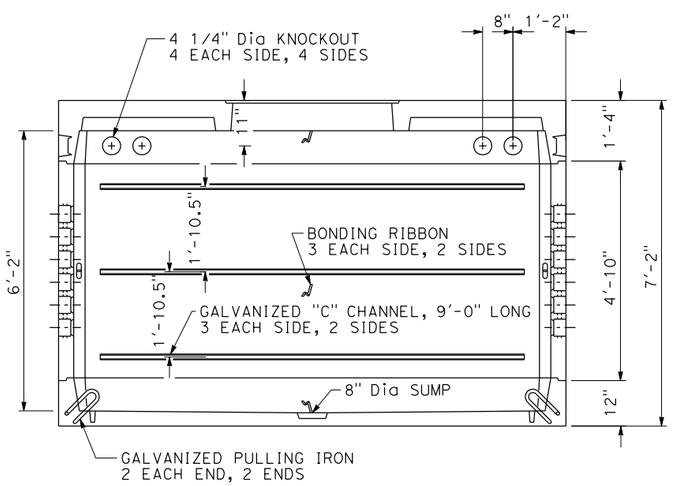

SECTION A-A

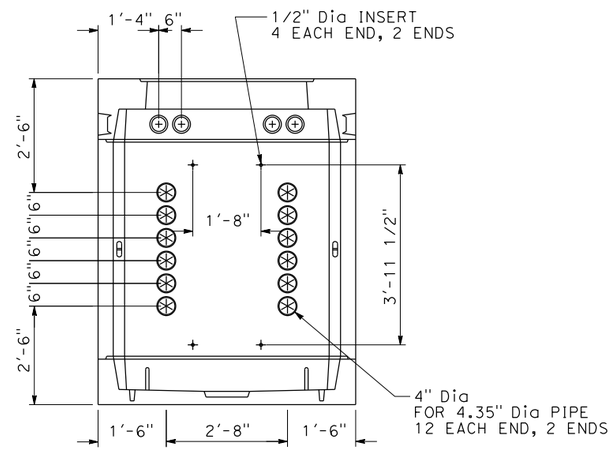

END VIEW

LARGE VAULT DETAILS (TYPE L)

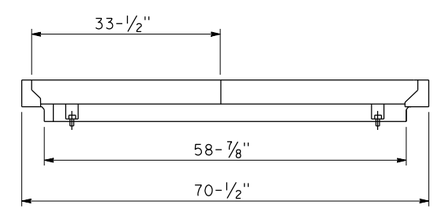

SIDE VIEW (CLOSED)

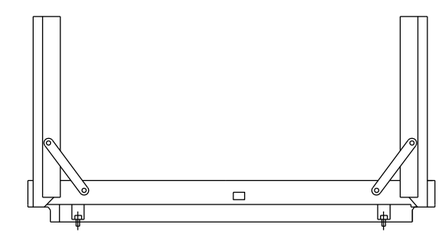

SIDE VIEW (OPEN)

ELECTRICAL VAULT COVER DETAILS

NO SCALE

	BY	CHECKED
DESIGN	PARAS BATTH	SEAN CHARLES
DETAILS		
QUANTITIES		

PREPARED FOR THE STATE OF CALIFORNIA DEPARTMENT OF TRANSPORTATION

DIVISION OF ENGINEERING SERVICES
ARCHITECTURAL AND STRUCTURAL DESIGN

BRIDGE NO. 23W0001L
POST MILE 14.8

WESTBOUND CORDELIA CVEF

ELECTRICAL SITE DETAILS
LARGE VAULT AND ELECTRICAL VAULT COVER

SHEET **EE11-8**

0421000155wj1108.dgn
DOES SD imperial Rev.1/07 5/11/2023 1:48:09 PM

ORIGINAL SCALE IN INCHES FOR REDUCED PLANS 0 1 2 3

CU 0711
EA 0A53T1

DISREGARD PRINTS BEARING EARLIER REVISION DATES → 04/03/23

REVISION DATES (PRELIMINARY STAGE ONLY) SHEET OF

5/11/2023 1:48:09 PM

0421000155wj1108.dgn

DIST.	COUNTY	ROUTE	POST MILES TOTAL PROJECT	SHEET NO.	TOTAL SHEETS
04	Sol	12,80	L1.8/L3.2, 13.4/17.2		

REGISTERED CIVIL ENGINEER DATE

REGISTERED PROFESSIONAL ENGINEER No. Exp. CIVIL STATE OF CALIFORNIA

PLANS APPROVAL DATE

The State of California or its officers or agents shall not be responsible for the accuracy or completeness of electronic copies of this plan sheet.

WMH CORPORATION
11070 White Rock Rd,
Suite 140
Rancho Cordova, CA 95670

SOLANO TRANSPORTATION AUTHORITY
423 Main Street,
SUISUN CITY, CA 94585

NOTES: (THIS SHEET ONLY)

1. BACKFILL ACCORDING TO STANDARD SPECIFICATIONS, SECTION 19. CONCRETE MUST BE PLACED AROUND AND UNDER VAULT (6" MINIMUM) AND MUST CONTAIN A MINIMUM OF 550 lbs OF PORTLAND CEMENT PER CUBIC YARD.
2. PLACE MINIMUM OF 6" CLEAN CRUSHED ROCK SUMP UNDER PORTLAND CEMENT CONCRETE. BOTTOM OF PULL BOX MUST BE SLOPED TOWARD DRAIN PIPE FOR DRAINAGE AND MUST HAVE SMOOTH FINISH.
3. PULL BOX MUST BE PRECAST OF STEEL REINFORCED PORTLAND CEMENT CONCRETE.
4. TRAFFIC PULL BOX MUST:
   A) BE PROVIDED WITH STEEL COVER WITH EMBOSSED NON-SKID PATTERN.
   B) BE REINFORCED WITH GALVANIZED Z-BAR WELDED FRAME REINFORCED.
   C) BE PROVIDED WITH REINFORCED 0.5" Min STEEL PLATE COVER, GALVANIZED AFTER FABRICATION.
   D) BE FLUSH WITH THE PAVEMENT.
   E) BE WELDED SHUT AFTER COMPLETION OF WORK EXCEPT WHEN PULL BOX IS INSTALLED WITHIN THE PAVED MEDIAN SHOULDER.
   F) COMPLY WITH LOADING REQUIREMENTS AS SPECIFIED.
5. NONTRAFFIC PULL BOX MUST:
   A) BE PROVIDED WITH POLYMER CONCRETE COVER.
   B) BE PROVIDED WITH ELECTRONIC MARKER CAST INSIDE OF COVER.
   C) BE BURIED AFTER COMPLETION OF WORK.
   D) COMPLY WITH LOADING REQUIREMENTS AS SPECIFIED.
6. TRAFFIC AND NONTRAFFIC FIBER OPTIC PULL BOX MUST HAVE PENTA BOLT LOCKING MECHANISM CAPABILITY AS A THEFT DETERRENT. LOCKING MECHANISM MUST BE PROVIDED FOR COVER AND VAULT. TWO ½" DIAMETER BRASS OR STAINLESS STEEL STUD BOLTS, NUTS, AND WASHERS. 2 BOLTS PER BOX, RECESS IN COVER FOR NUT.
7. MINIMUM PULL BOX DEPTH MUST BE 24". IF NECESSARY, USE EXTENSION OF THE SAME MATERIAL AND QUALITY TO MEET THE DEPTH REQUIREMENT.
8. SEE PLAN SHEETS FOR NUMBER AND SIZE OF CONDUIT.
9. ALL CONDUITS MUST ENTER THROUGH KNOCKOUTS. IF MORE THAN 3 CONDUITS ARE REQUIRED IN SAME KNOCKOUT, KNOCKOUT MUST BE WIDENED TO ⅜" MORE THAN THE COMBINED CONDUIT WIDTH.
10. CONDUIT FROM THE TYPICAL BORE OR TRENCH SECTION MUST NOT DEFLECT BY MORE THAN 1′ PER 10′ FROM THE ALIGNMENT PRECEDING OR FOLLOWING THE PULL BOX.
11. BOTTOM OF CONDUIT CENTERLINE MUST BE ALIGNED TO EXIT TOP OF PULL BOX AS SHOWN TO FACILITATE CABLE PULLING. IF EXISTING CONDUIT USED AND IF THE SWEEP IS NOT AS SHOWN, MODIFY EXISTING CONDUIT TO MATCH SWEEP AS SHOWN. INSTALL CONDUIT ELBOW AS SHOWN.
12. EXCESS CONDUIT FOR ALL CONDUIT ENDS MUST BE CUT BACK TO PROVIDE STUB ENDS OF 1" MINIMUM TO 2" MAXIMUM.
13. ALL METALLIC CONDUIT MUST HAVE THREADED METALLIC BUSHINGS. ALL PVC AND HDPE CONDUITS MUST HAVE BELL ENDS.
14. INSTALL CONDUIT SEALING PLUGS FOR ALL CONDUITS PER PROJECT SPECIFICATIONS.
15. ALL CONDUITS AND PULL BOXES CONTAINING FIBER OPTIC CABLE MUST HAVE PERMANENT MARKERS.
16. FOR ADDITIONAL NOTES AND DETAILS, SEE STANDARD PLANS ES-8A FOR NO. 6 NONTRAFFIC PULL BOX AND ES-8B FOR NO. 6(T) TRAFFIC PULL BOX.
17. COVER MARKING MUST BE "TOLL ETS COMMS" FOR ALL TOLL SYSTEM COVERS.
    COVER MARKING MUST BE "CALTRANS" AND "FIBER OPTIC" FOR ALL CALTRANS SYSTEM COVERS.
    COVER MARKING MUST BE "CALTRANS/TOLL" AND "FIBER OPTIC" FOR ALL JOINT SYSTEM COVERS.

LEGEND: (THIS SHEET ONLY)

(1) 45 DEGREE ELBOW, 3′ RADIUS Min. ELBOW AND COUPLING MAY NOT BE NECESSARY FOR NEW CONDUIT INSTALLED BY DIRECTIONAL BORING. NEW CONDUIT INSTALLED BY DIRECTIONAL BORING MUST ENTER THE PULL BOX WITH BENDING RADIUS OF 3′ Min.

(2) WARNING TAPE (FOR NEW CONDUIT INSTALLED BY TRENCHING).

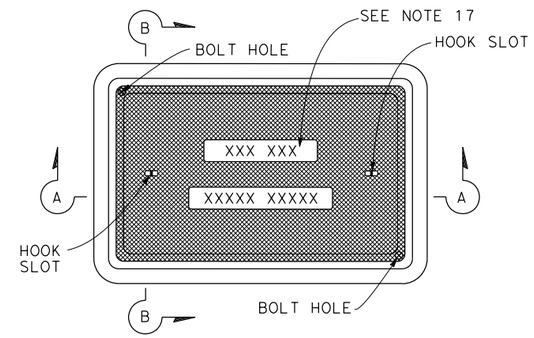

PLAN VIEW

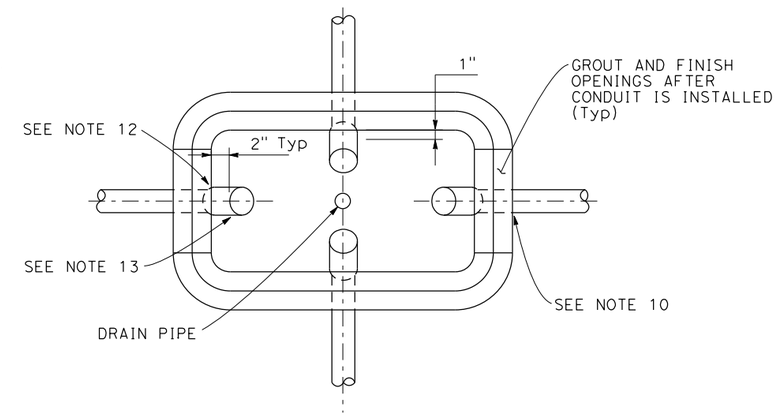

℄ BOX

PLAN VIEW WITHOUT COVER

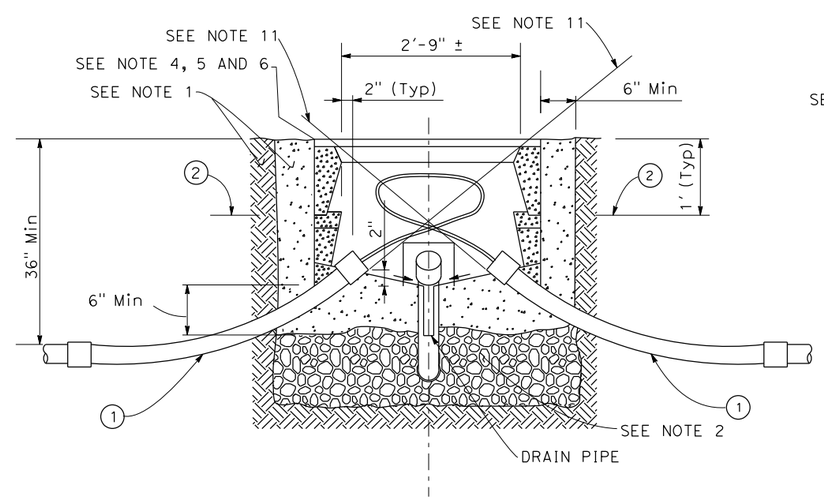

SECTION A-A

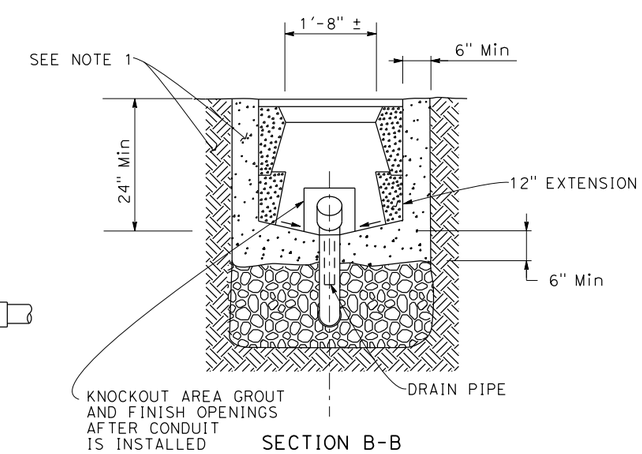

SECTION B-B

FIBER OPTIC PULL BOX

NO SCALE

DESIGN	BY PARAS BATTH	CHECKED SEAN CHARLES	
DETAILS	BY	CHECKED	
QUANTITIES	BY	CHECKED	

PREPARED FOR THE STATE OF CALIFORNIA DEPARTMENT OF TRANSPORTATION

DIVISION OF ENGINEERING SERVICES ARCHITECTURAL AND STRUCTURAL DESIGN

BRIDGE NO. 23W0001L
POST MILE 14.8

WESTBOUND CORDELIA CVEF

ELECTRICAL SITE DETAILS
FIBER OPTIC PULLBOX

SHEET **EE11-9**

0421000155wj1109.dgn
DOES SD imperial Rev.1/07 5/11/2023 1:48:15 PM

ORIGINAL SCALE IN INCHES FOR REDUCED PLANS 0 1 2 3

CU 0711
EA 0A53T1

DISREGARD PRINTS BEARING EARLIER REVISION DATES → 04/03/23

REVISION DATES (PRELIMINARY STAGE ONLY) SHEET OF

5/11/2023 1:48:15 PM

0421000155wj1109.dgn

DIST.	COUNTY	ROUTE	POST MILES TOTAL PROJECT	SHEET NO.	TOTAL SHEETS
04	Sol	12,80	L1.8/L3.2, 13.4/17.2		

REGISTERED CIVIL ENGINEER DATE

REGISTERED PROFESSIONAL ENGINEER No. Exp. CIVIL STATE OF CALIFORNIA

PLANS APPROVAL DATE

The State of California or its officers or agents shall not be responsible for the accuracy or completeness of electronic copies of this plan sheet.

WMH CORPORATION
11070 White Rock Rd,
Suite 140
Rancho Cordova, CA 95670

SOLANO TRANSPORTATION AUTHORITY
423 Main Street,
SUISUN CITY, CA 94585

NOTES: (THIS SHEET ONLY)

1. BACKFILL AS SPECIFIED IN STD SPEC, SECTION 19. CONCRETE MUST BE PLACED AROUND AND UNDER VAULT (6" MINIMUM) AND MUST CONTAIN A MINIMUM OF 500 lbs OF PORTLAND CEMENT PER CUBIC YARD.
2. PLACE MINIMUM OF 6" CLEAN CRUSHED ROCK SUMP UNDER PORTLAND CEMENT. BOTTOM OF PULL BOX MUST BE SLOPED TOWARD DRAIN PIPE FOR DRAINAGE AND MUST HAVE SMOOTH FINISH.
3. MINIMUM VAULT DEPTH MUST BE 30". IF NECESSARY, AN EXTENSION MAY BE USED TO MEET THE DEPTH REQUIREMENT.
4. VAULT LOCATED IN PAVEMENT MUST:
   A) BE PROVIDED WITH STEEL COVER WITH EMBOSSED NON-SKID PATTERN.
   B) BE REINFORCED WITH GALVANZIED Z-BAR WELDED FRAME REINFORCED.
   C) BE PROVIDED WITH REINFORCED 0.5" MIN STEEL PLATE COVER, GALVANIZED AFTER FABRICATION.
   D) BE FLUSH WITH THE PAVEMENT.
   E) BE WELDED SHUT AFTER COMPLETION OF WORK EXCEPT WHEN VAULT IS INSTALLED WITHIN THE PAVED MEDIAN SHOULDER.
   F) VAULT WITH COVER MARKING "TOLL ETS COMMS" WILL BE WELDED BY OTHERS (TSI) UNLESS NOTED OTHERWISE.
   G) COMPLY WITH LOADING REQUIREMENTS AS SPECIFIED.
5. VAULT LOCATED OUTSIDE PAVEMENT MUST:
   A) BE PROVIDED WITH POLYMER CONCRETE COVER.
   B) BE PROVIDED WITH ELECTRONIC MARKER CAST INSIDE OF COVER.
   C) BE BURIED AFTER COMPLETION OF WORK. VAULT WITH COVER MARKING "TOLL ETS COMMS" WILL BE BURIED BY OTHERS (TSI) UNLESS NOTED OTHERWISE.
   D) COMPLY WITH LOADING REQUIREMENTS AS SPECIFIED.
6. VAULT LOCATED INSIDE AND OUTSIDE PAVEMENT MUST HAVE PENTA BOLT LOCKING MECHANISM CAPABILITY AS A THEFT DETERRENT. LOCKING MECHANISM MUST BE PROVIDED FOR COVER AND VAULT. FOUR 1/2" DIAMETER BRASS OR STAINLESS STEEL STUD BOLTS, NUTS, AND WASHERS. 4 BOLTS PER BOX, RECESSS IN COVER FOR NUT.
7. COVER MARKING MUST BE "TOLL ETS COMMS" FOR ALL TOLL SYSTEM COVERS. COVER MARKING MUST BE "CALTRANS" AND "FIBER OPTIC" FOR ALL CALTRANS SYSTEM COVERS. COVER MARKING MUST BE "CALTRANS/TOLL" AND "FIBER OPTIC" FOR ALL JOINT SYSTEM COVERS.
8. SEE ELECTRICAL PLANS FOR NUMBER AND SIZE OF CONDUIT.
9. ALL CONDUITS MUST ENTER THROUGH KNOCKOUTS. IF MORE THAN 3 CONDUITS ARE REQUIRED IN SAME KNOCKOUT, KNOCKOUT MUST BE WIDENED TO 3/8" MORE THAN THE COMBINED CONDUIT WIDTH.
10. TRUNK LINE CONDUITS FROM THE TYPICAL BORE OR TRENCH SECTION MUST NOT DEFLECT BY MORE THAN ONE FEET PER 10 Ft FROM THE ALIGNMENT PRECEDING OR FOLLOWING VAULT ENTRANCE/EXIT.
11. BOTTOM OF CONDUIT CENTERLINE MUST BE ALIGNED TO EXIT TOP OF VAULT AS SHOWN TO FACILITATE CABLE PULLING. IF EXISTING CONDUIT USED AND IF THE SWEEP IS NOT AS SHOWN, MODIFY EXISTING CONDUIT TO MATCH SWEEP AS SHOWN. INSTALL CONDUIT ELBOW AS SHOWN.
12. EXCESS CONDUIT FOR ALL CONDUIT ENDS MUST BE CUT BACK TO PROVIDE STUB ENDS OF 1" MINIMUM TO 2" MAXIMUM.
13. ALL METALLIC CONDUITS MUST HAVE THREADED METALLIC BUSHINGS. ALL PVC AND HDPE CONDUITS MUST HAVE BELL ENDS.
14. INSTALL CONDUIT SEALING PLUGS FOR ALL CONDUITS PER PROJECT SPECIFICATIONS.
15. ALL VAULT MUST BE FURNISHED WITH TWO RACKS AND HOOKS INSTALLED ON EACH OF THE TWO LONG SIDES.
16. SPLICE ENCLOSURES IN FIBER OPTIC VAULT MUST BE USED ONLY WHERE SHOWN. SPLICE ENCLOSURE MUST BE ATTACHED TO THE RACK AND HOOK SYSTEM ON THE SAME SIDE AS THE FIBER OPTIC CABLE. THE SPLICE ENCLOSURE MUST BE ANGLED TO FACILITATE MINIMUM BENDING RADIUS IN THE CABLE.
17. ALL CONDUITS AND FIBER OPTIC VAULT CONTAINING FIBER OPTIC CABLE MUST HAVE PERMANENT MARKERS.

LEGEND: (THIS SHEET ONLY)

1. FIBER OPTIC SPLICE ENCLOSURE, SEE NOTE 16.
2. FIBER OPTIC VAULT COVER, SEE NOTE 4, 5 AND 6.
3. RACK & HOOK ASSEMBLY, SEE NOTE 15 AND 16.
4. 45 DEGREE ELBOW, 3' RADIUS Min. ELBOW AND COUPLING MAY NOT BE NECESSARY FOR NEW CONDUIT INSTALLED BY DIRECTIONAL BORING. NEW CONDUIT INSTALLED BY DIRECTIONAL DRILLING MUST ENTER PULL BOX WITH A BENDING RADIUS OF 3' MINIMUM.
5. WARNING TAPE (FOR NEW CONDUIT INSTALLED BY TRENCHING).

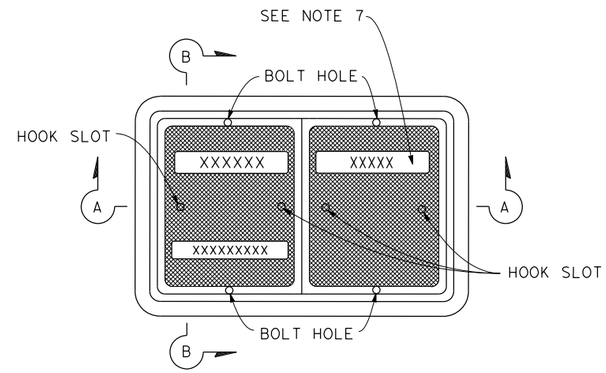

PLAN VIEW

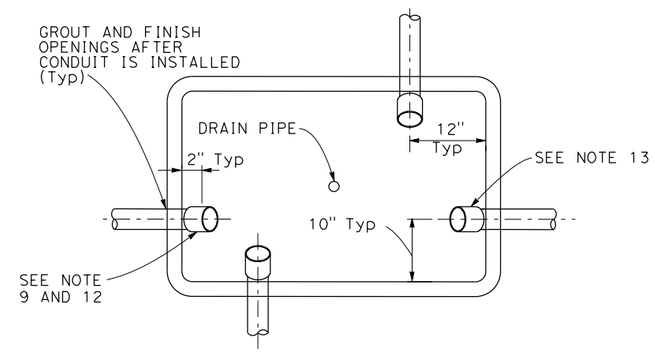

PLAN VIEW WITHOUT COVER

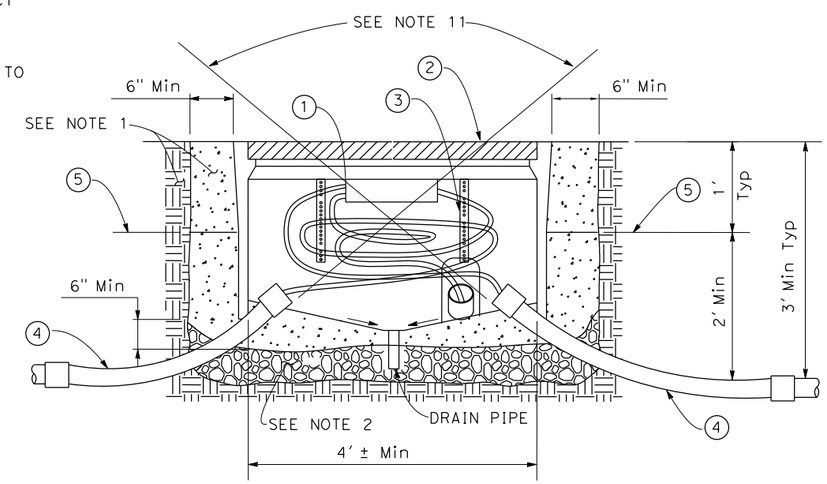

SECTION A-A

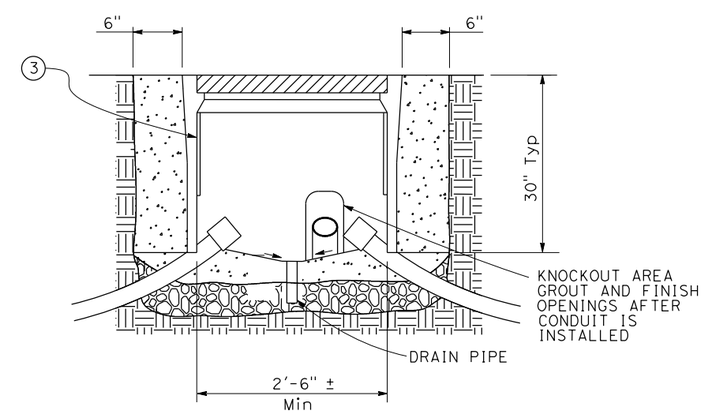

SECTION B-B

FIBER OPTIC SPLICE VAULT

NO SCALE

DESIGN	BY PARAS BATTH	CHECKED SEAN CHARLES	
DETAILS	BY	CHECKED	
QUANTITIES	BY	CHECKED	

PREPARED FOR THE STATE OF CALIFORNIA DEPARTMENT OF TRANSPORTATION

DIVISION OF ENGINEERING SERVICES ARCHITECTURAL AND STRUCTURAL DESIGN

BRIDGE NO. 23W0001L
POST MILE 14.8

WESTBOUND CORDELIA CVEF

ELECTRICAL SITE DETAILS
FIBER OPTIC SPLICE VAULT

SHEET EE11-10

0421000155wj1110.dgn
DOES SD imperial Rev.1/07 5/11/2023 1:48:20 PM

ORIGINAL SCALE IN INCHES FOR REDUCED PLANS 0 1 2 3

CU 0711
EA 0A53T1

DISREGARD PRINTS BEARING EARLIER REVISION DATES → 04/03/23

REVISION DATES (PRELIMINARY STAGE ONLY) SHEET OF

5/11/2023 1:48:20 PM

0421000155wj1110.dgn

DIST.	COUNTY	ROUTE	POST MILES TOTAL PROJECT	SHEET NO.	TOTAL SHEETS
04	Sol	12,80	L1.8/L3.2, 13.4/17.2		

REGISTERED CIVIL ENGINEER DATE

REGISTERED PROFESSIONAL ENGINEER No. Exp. CIVIL STATE OF CALIFORNIA

PLANS APPROVAL DATE

The State of California or its officers or agents shall not be responsible for the accuracy or completeness of electronic copies of this plan sheet.

WMH CORPORATION
11070 White Rock Rd,
Suite 140
Rancho Cordova, CA 95670

SOLANO TRANSPORTATION AUTHORITY
423 Main Street,
SUISUN CITY, CA 94585

NOTES:

FOR ACCURATE RIGHT OF WAY DATA, CONTACT
RIGHT OF WAY ENGINEERING AT THE DISTRICT OFFICE.

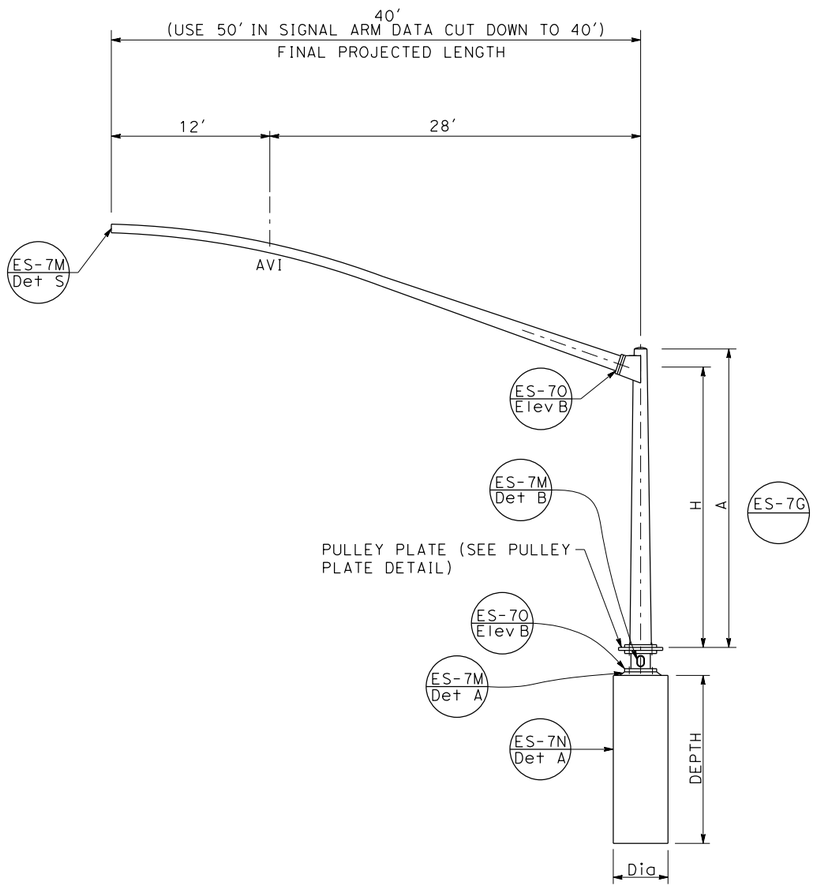

ELEVATION
28-5-100 (Mod)
WITH SINGLE AVI

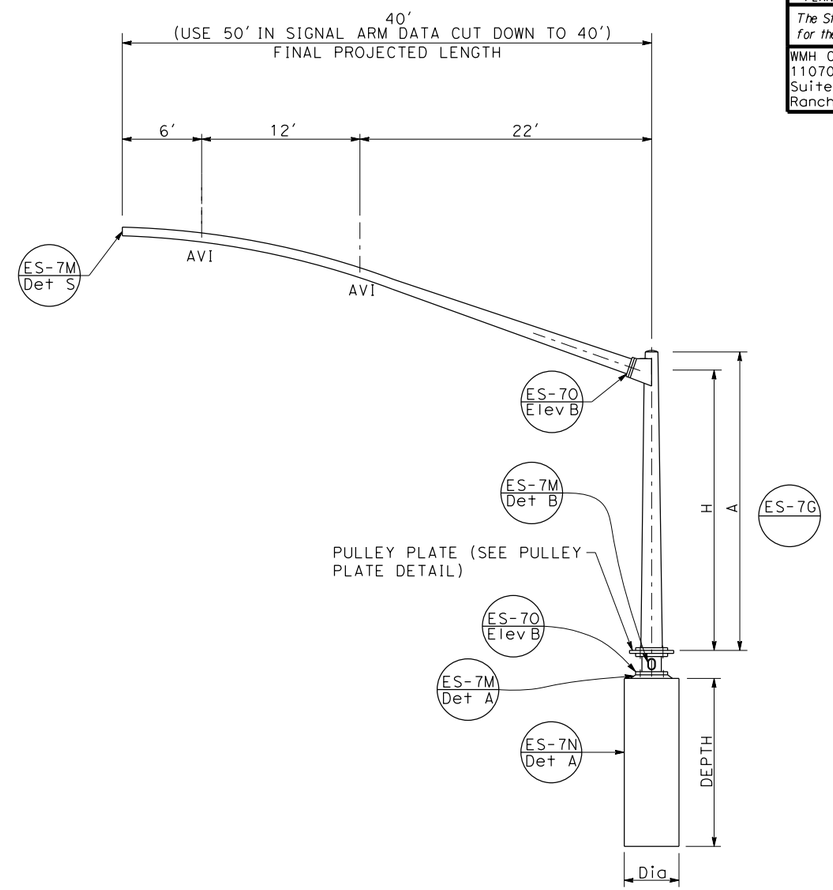

ELEVATION
28-5-100 (Mod)
WITH DOUBLE AVI

NO SCALE

DESIGN	BY PARAS BATTH	CHECKED SEAN CHARLES	
DETAILS	BY	CHECKED	
QUANTITIES	BY	CHECKED	

PREPARED FOR THE STATE OF CALIFORNIA DEPARTMENT OF TRANSPORTATION

DIVISION OF ENGINEERING SERVICES
ARCHITECTURAL AND STRUCTURAL DESIGN

BRIDGE NO. 23W0001L
POST MILE 14.8

WESTBOUND CORDELIA CVEF

ELECTRICAL SITE DETAILS
TYPE 28-5-100 (Mod) POLE

SHEET **EE11-11**

0421000155wj1111.dgn
DOES SD imperial Rev.1/07 5/11/2023 1:48:24 PM

ORIGINAL SCALE IN INCHES FOR REDUCED PLANS 0 1 2 3

CU 0711
EA 0A53T1

DISREGARD PRINTS BEARING EARLIER REVISION DATES → 04/03/23

REVISION DATES (PRELIMINARY STAGE ONLY) SHEET OF

5/11/2023 1:48:24 PM

0421000155wj1111.dgn

DIST.	COUNTY	ROUTE	POST MILES TOTAL PROJECT	SHEET NO.	TOTAL SHEETS
04	Sol	12,80	L1.8/L3.2, 13.4/17.2		

REGISTERED CIVIL ENGINEER DATE

REGISTERED PROFESSIONAL ENGINEER No. Exp. CIVIL STATE OF CALIFORNIA

PLANS APPROVAL DATE

The State of California or its officers or agents shall not be responsible for the accuracy or completeness of electronic copies of this plan sheet.

WMH CORPORATION
11070 White Rock Rd,
Suite 140
Rancho Cordova, CA 95670

SOLANO TRANSPORTATION AUTHORITY
423 Main Street,
SUISUN CITY, CA 94585

NOTES:

1. FOR ACCURATE RIGHT OF WAY DATA, CONTACT RIGHT OF WAY ENGINEERING AT THE DISTRICT OFFICE.
2. WASHER ASSEMBLY CONSIST OF TWO FIBER, TWO FLAT AND LOCK WASHERS
3. ALL STEEL MINIMUM YIELD STRENGTH=48,000 psi EXCEPT WHEN NOTED OTHERWISE
4. FOR DETAILS NOT SHOWN, SEE 2022 AND 2022 RSP STANDARD PLANS

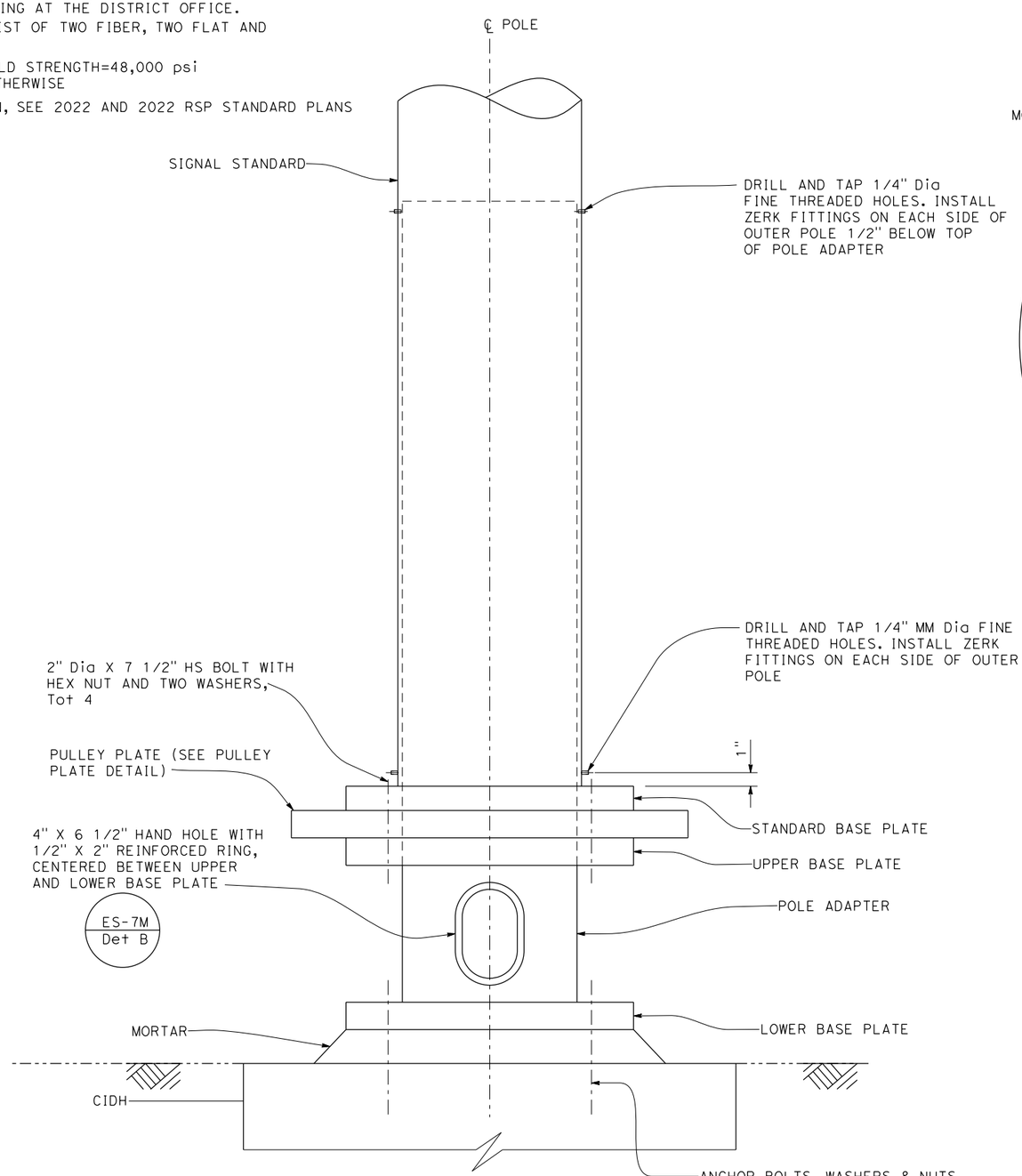

(BOLTS & NUTS NOT SHOWN)

ELEVATION

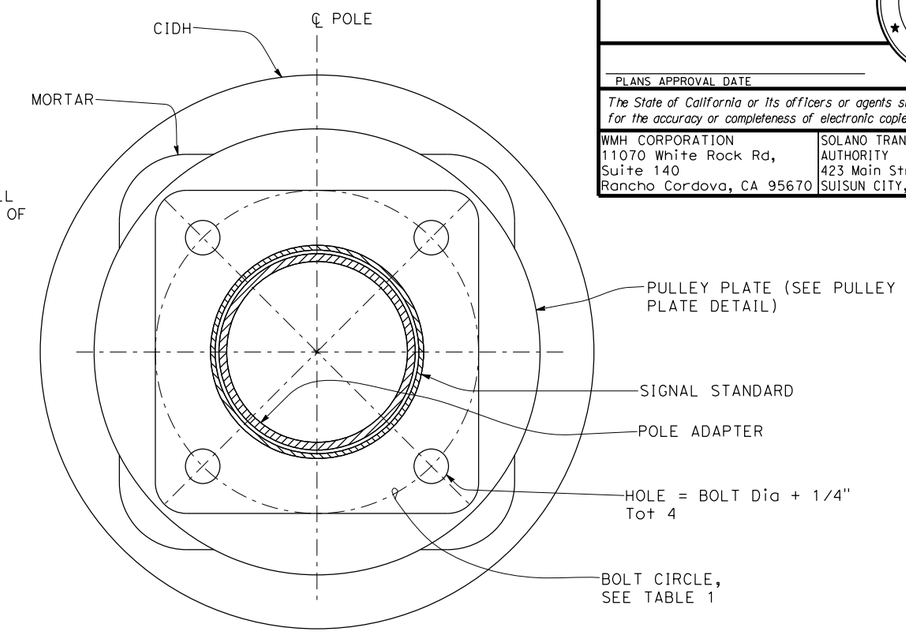

PLAN

(BOLTS & NUTS NOT SHOWN)

ES-7G ES-7N

DESIGN NOTE:

TYPE 28-5-100 (Mod) USED AS ROTATING POLE WITH AVI ANTENNNA(Tot 2 Max)
DESIGN: AASHTO STANDARD SPECIFICATIONS FOR STRUCTURAL SUPPORTS FOR HIGHWAY SIGNS, LUMINAIRES AND TRAFFIC SIGNALS DATED 2018

WIND LOADING: 100 MPH AASHTO

NO SCALE

	BY	CHECKED
DESIGN	PARAS BATTH	SEAN CHARLES
DETAILS		
QUANTITIES		

PREPARED FOR THE STATE OF CALIFORNIA DEPARTMENT OF TRANSPORTATION

DIVISION OF ENGINEERING SERVICES
ARCHITECTURAL AND STRUCTURAL DESIGN

BRIDGE NO. 23W0001L
POST MILE 14.8

WESTBOUND CORDELIA CVEF

ELECTRICAL SITE DETAILS
TYPE 28-5-100 (Mod) POLE

SHEET **EE11-12**

0421000155wj1112.dgn
DOES SD imperial Rev.1/07 5/11/2023 1:48:29 PM

ORIGINAL SCALE IN INCHES FOR REDUCED PLANS 0 1 2 3

CU 0711
EA 0A53T1

DISREGARD PRINTS BEARING EARLIER REVISION DATES → 04/03/23

REVISION DATES (PRELIMINARY STAGE ONLY) SHEET OF

5/11/2023 1:48:29 PM
0421000155wj1112.dgn

DIST.	COUNTY	ROUTE	POST MILES TOTAL PROJECT	SHEET NO.	TOTAL SHEETS
04	Sol	12,80	L1.8/L3.2, 13.4/17.2		

REGISTERED CIVIL ENGINEER DATE

REGISTERED PROFESSIONAL ENGINEER No. Exp. CIVIL STATE OF CALIFORNIA

PLANS APPROVAL DATE

The State of California or its officers or agents shall not be responsible for the accuracy or completeness of electronic copies of this plan sheet.

WMH CORPORATION
11070 White Rock Rd,
Suite 140
Rancho Cordova, CA 95670

SOLANO TRANSPORTATION AUTHORITY
423 Main Street,
SUISUN CITY, CA 94585

NOTES:

1. FOR ACCURATE RIGHT OF WAY DATA, CONTACT RIGHT OF WAY ENGINEERING AT THE DISTRICT OFFICE.
2. FOR DETAILS NOT SHOWN, SEE 2022 AND 2022 RSP STANDARD PLANS

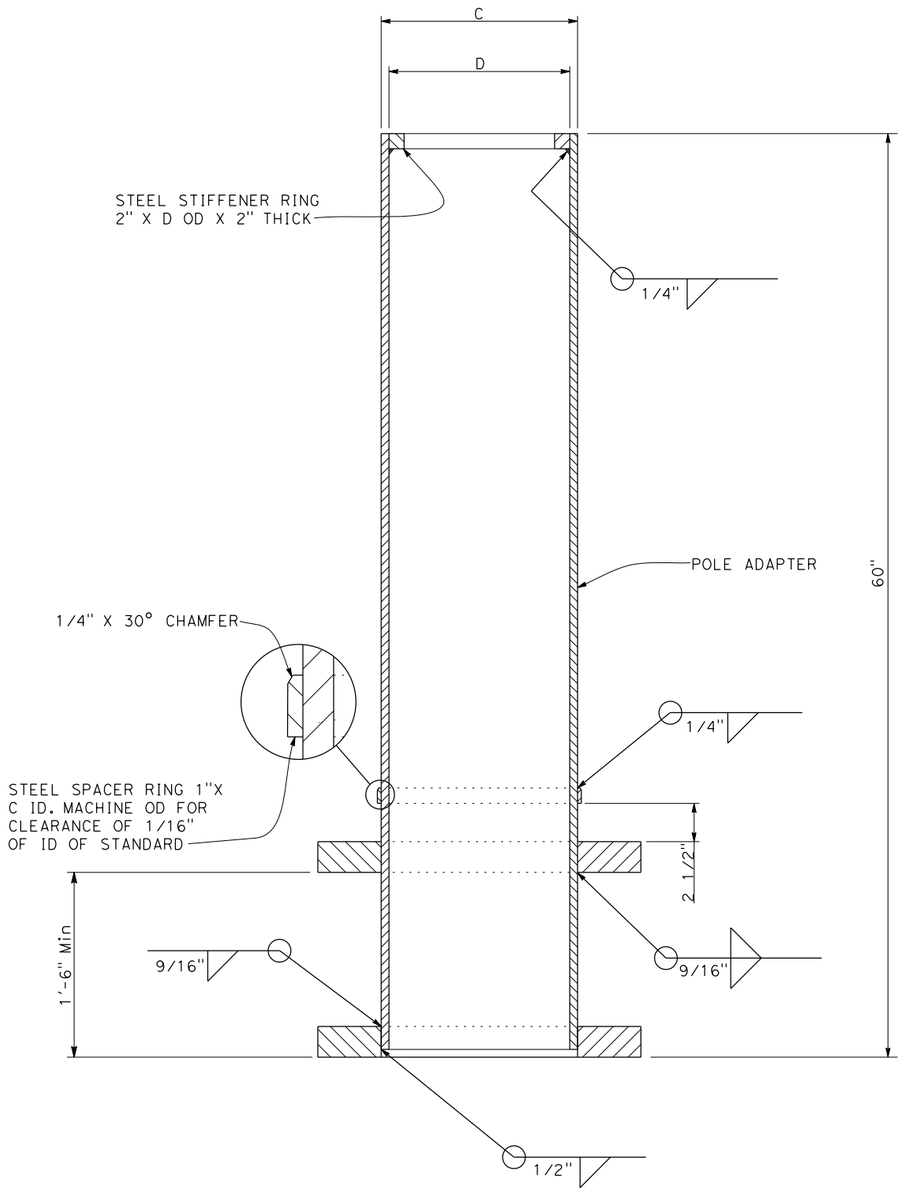

SECTIONAL VIEW
POLE ADAPTOR

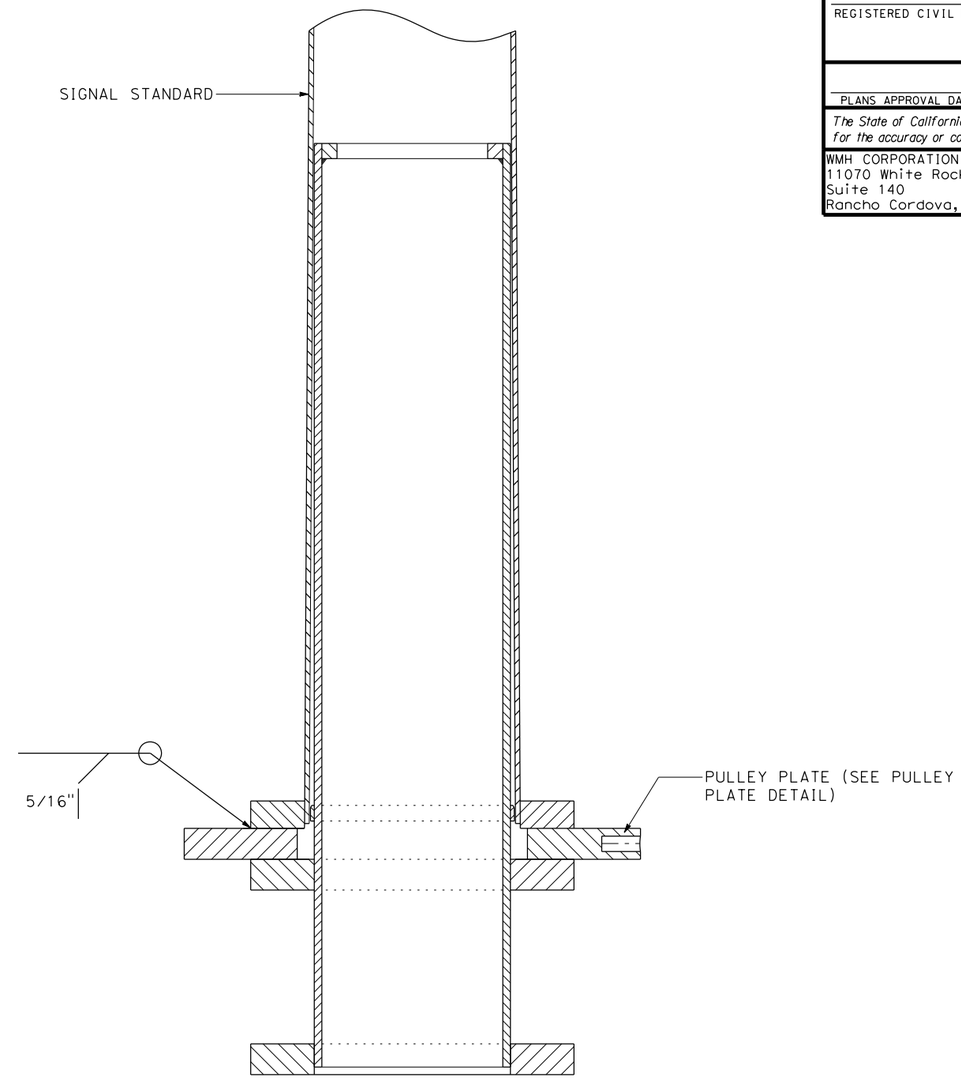

SECTON VIEW
STANDARD AND
POLE ADAPTOR ASSEMBLED

NO SCALE

	BY	CHECKED
DESIGN	PARAS BATTH	SEAN CHARLES
DETAILS	BY	CHECKED
QUANTITIES	BY	CHECKED

PREPARED FOR THE STATE OF CALIFORNIA DEPARTMENT OF TRANSPORTATION

DIVISION OF ENGINEERING SERVICES
ARCHITECTURAL AND STRUCTURAL DESIGN

BRIDGE NO. 23W0001L
POST MILE 14.8

WESTBOUND CORDELIA CVEF

ELECTRICAL SITE DETAILS
TYPE 28-5-100 (Mod) POLE

SHEET **EE11-13**

0421000155wj1113.dgn
DOES SD imperial Rev.1/07 5/11/2023 1:48:34 PM

ORIGINAL SCALE IN INCHES FOR REDUCED PLANS 0 1 2 3

CU 0711
EA 0A53T1

DISREGARD PRINTS BEARING EARLIER REVISION DATES → 04/03/23

REVISION DATES (PRELIMINARY STAGE ONLY) SHEET OF

5/11/2023 1:48:34 PM

0421000155wj1113.dgn

DIST.	COUNTY	ROUTE	POST MILES TOTAL PROJECT	SHEET NO.	TOTAL SHEETS
04	Sol	12,80	L1.8/L3.2, 13.4/17.2		

REGISTERED CIVIL ENGINEER DATE

REGISTERED PROFESSIONAL ENGINEER No. Exp. CIVIL STATE OF CALIFORNIA

PLANS APPROVAL DATE

The State of California or its officers or agents shall not be responsible for the accuracy or completeness of electronic copies of this plan sheet.

WMH CORPORATION
11070 White Rock Rd,
Suite 140
Rancho Cordova, CA 95670

SOLANO TRANSPORTATION AUTHORITY
423 Main Street,
SUISUN CITY, CA 94585

NOTES:

1. FOR ACCURATE RIGHT OF WAY DATA, CONTACT RIGHT OF WAY ENGINEERING AT THE DISTRICT OFFICE.
2. FOR DETAILS NOT SHOWN, SEE 2022 AND 2022 RSP STANDARD PLANS.

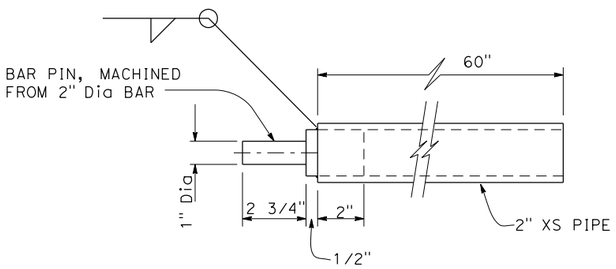

LEVERAGE BAR

TABLE I

TYPE OF SIGNAL/LIGHTING STANDARD (Mod)	BOLT CIRCLE DIAMETER	A	B	C	D
28-5-100	21"	30"	15"	12 3/4"	11 3/4"

DIRECTION OF TRAFFIC

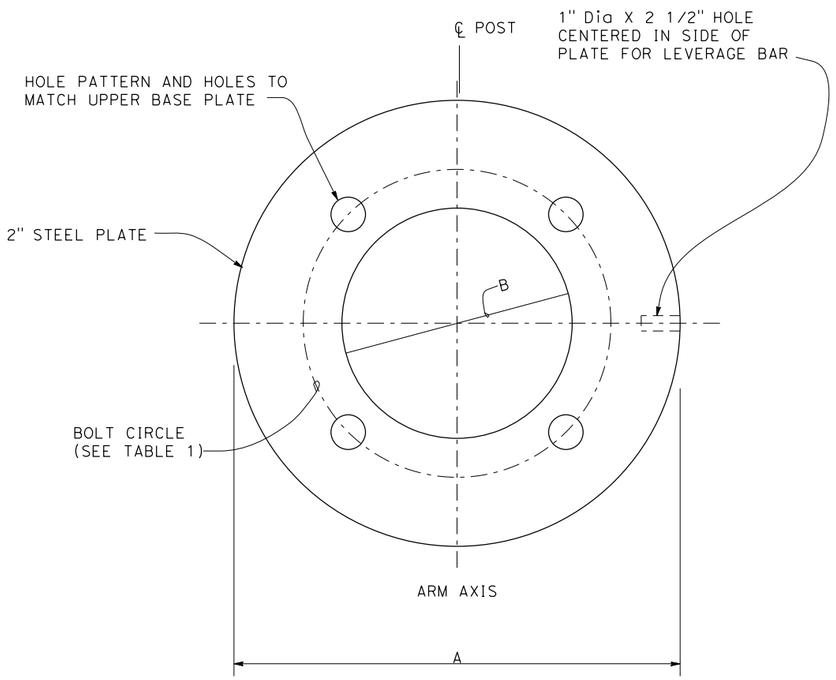

PLAN

PULLEY PLATE DETAILS

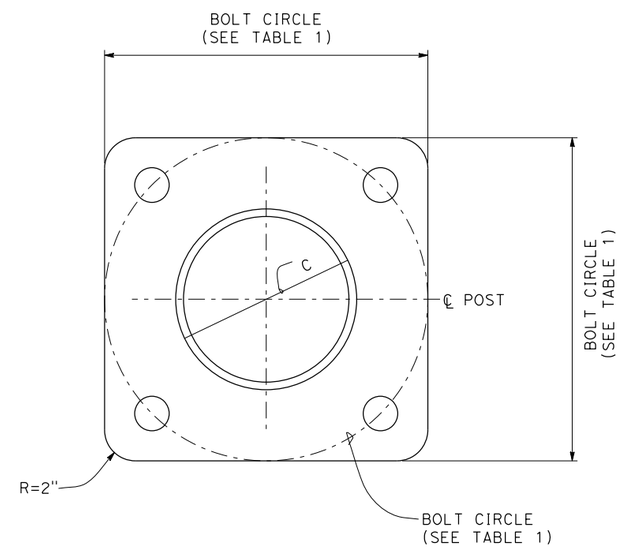

UPPER BASE PLATE POLE ADAPTOR

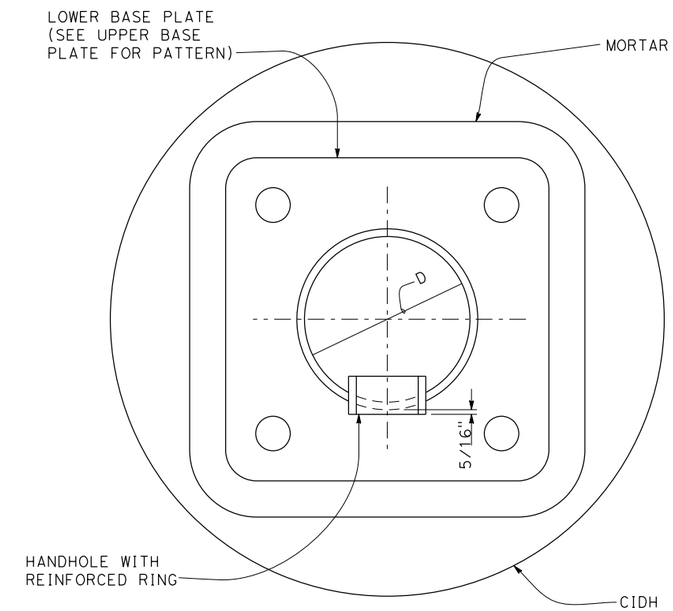

SECTION A-A

ES-7M

NO SCALE

DESIGN	BY PARAS BATTH	CHECKED SEAN CHARLES	
DETAILS	BY	CHECKED	
QUANTITIES	BY	CHECKED	

PREPARED FOR THE STATE OF CALIFORNIA DEPARTMENT OF TRANSPORTATION

DIVISION OF ENGINEERING SERVICES
ARCHITECTURAL AND STRUCTURAL DESIGN

BRIDGE NO. 23W0001L
POST MILE 14.8

WESTBOUND CORDELIA CVEF

ELECTRICAL SITE DETAILS
TYPE 28-5-100 (Mod) POLE

SHEET **EE11-14**

0421000155wj1114.dgn
DOES SD imperial Rev.1/07 5/11/2023 1:48:38 PM

ORIGINAL SCALE IN INCHES FOR REDUCED PLANS 0 1 2 3

CU 0711
EA 0A53T1

DISREGARD PRINTS BEARING EARLIER REVISION DATES → 04/03/23

REVISION DATES (PRELIMINARY STAGE ONLY) SHEET OF

5/11/2023 1:48:38 PM
0421000155wj1114.dgn

DIST.	COUNTY	ROUTE	POST MILES TOTAL PROJECT	SHEET NO.	TOTAL SHEETS
04	Sol	12,80	L1.8/L3.2, 13.4/17.2		

REGISTERED CIVIL ENGINEER DATE

REGISTERED PROFESSIONAL ENGINEER No. Exp. CIVIL STATE OF CALIFORNIA

PLANS APPROVAL DATE

The State of California or its officers or agents shall not be responsible for the accuracy or completeness of electronic copies of this plan sheet.

WMH CORPORATION
11070 White Rock Rd,
Suite 140
Rancho Cordova, CA 95670

SOLANO TRANSPORTATION AUTHORITY
423 Main Street,
SUISUN CITY, CA 94585

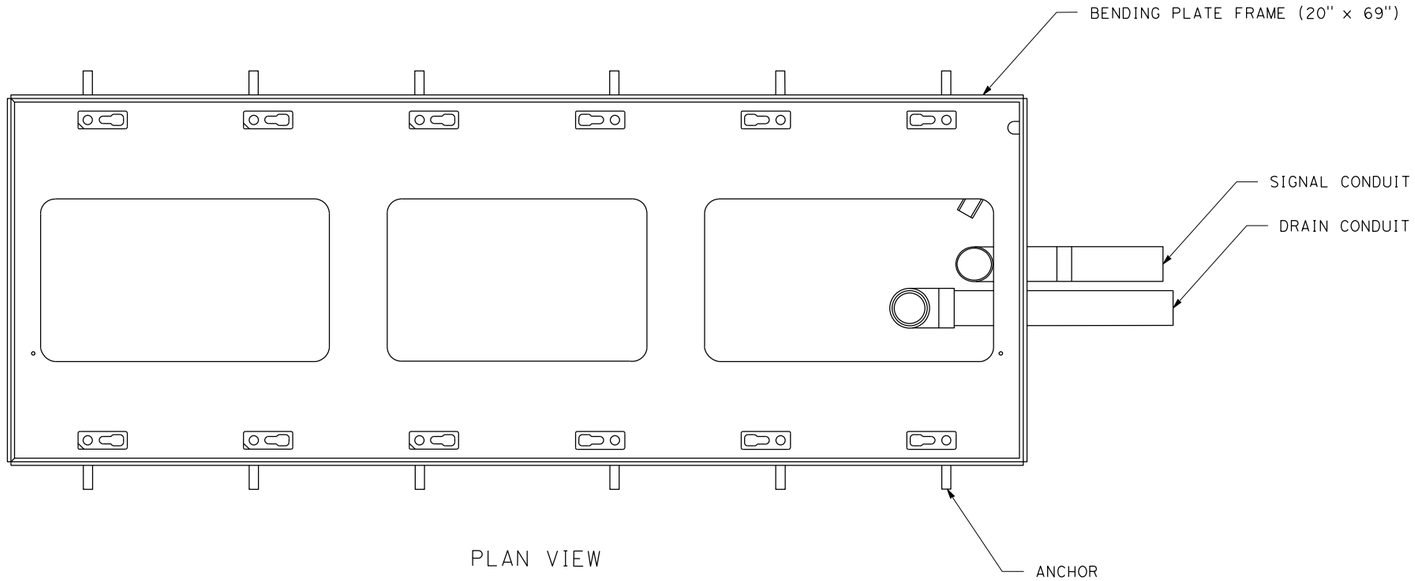

PLAN VIEW

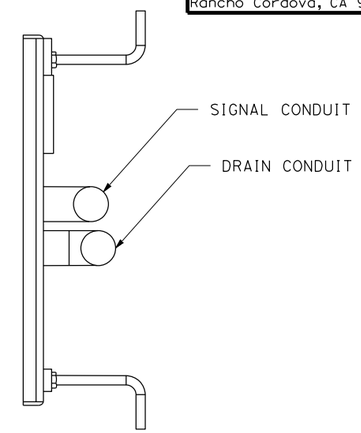

END VIEW

CONDUIT ENTRANCE

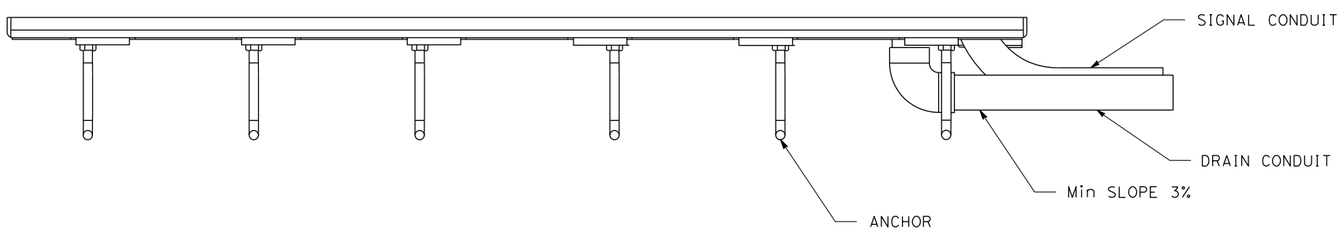

SIDE VIEW

NOTES:

1. INSTALL NON-METALLIC BUSHING AT ROADWAY END OF CONDUIT.
2. INSTALL DUCT SEAL COMPOUND TO EACH END OF ROADWAY CONDUIT BEFORE INSTALLING EPOXY OR OTHER APPROVED MATERIALS.
3. THE WIM ENGINEER WILL VERIFY THE FINAL LOCATION OF THE WIM BENDING PLATES AND DETECTORS PRIOR TO PANEL FABRICATION.
4. WIM SCALE MUST MATCH EXISTING ROADWAY PROFILE AND CROSS-SLOPE.
5. EXACT CONFIGURATION AND INSTALLATION PROCEDURES OF BENDING PLATES, PIEZO AXLE SENSORS AND LOOP DETECTORS MUST CONFORM TO THE REQUIREMENTS OF THE WIM MANUFACTURER.
6. NO WORK SHALL BE PERFORMED ON THE WIM STATION WITHOUT WIM VENDOR SUPERVISION.

NO SCALE

	BY	CHECKED
DESIGN	PARAS BATTH	SEAN CHARLES
DETAILS		
QUANTITIES		

PREPARED FOR THE STATE OF CALIFORNIA DEPARTMENT OF TRANSPORTATION

DIVISION OF ENGINEERING SERVICES
ARCHITECTURAL AND STRUCTURAL DESIGN

BRIDGE NO. 23W0001L
POST MILE 14.8

WESTBOUND CORDELIA CVEF

ELECTRICAL SITE DETAILS
WEIGH-IN-MOTION SYSTEM

SHEET **EE11-15**

0421000155wj1115.dgn
DOES SD imperial Rev.1/07 5/11/2023 1:48:43 PM

ORIGINAL SCALE IN INCHES FOR REDUCED PLANS 0 1 2 3

CU 0711
EA 0A53T1

DISREGARD PRINTS BEARING EARLIER REVISION DATES → 04/03/23

REVISION DATES (PRELIMINARY STAGE ONLY) SHEET OF

5/11/2023 1:48:43 PM

0421000155wj1115.dgn

DIST.	COUNTY	ROUTE	POST MILES TOTAL PROJECT	SHEET NO.	TOTAL SHEETS
04	Sol	12,80	L1.8/L3.2, 13.4/17.2		

REGISTERED CIVIL ENGINEER DATE

REGISTERED PROFESSIONAL ENGINEER
No.
Exp.
CIVIL
STATE OF CALIFORNIA

PLANS APPROVAL DATE

The State of California or its officers or agents shall not be responsible for the accuracy or completeness of electronic copies of this plan sheet.

WMH CORPORATION
11070 White Rock Rd,
Suite 140
Rancho Cordova, CA 95670

SOLANO TRANSPORTATION AUTHORITY
423 Main Street,
SUISUN CITY, CA 94585

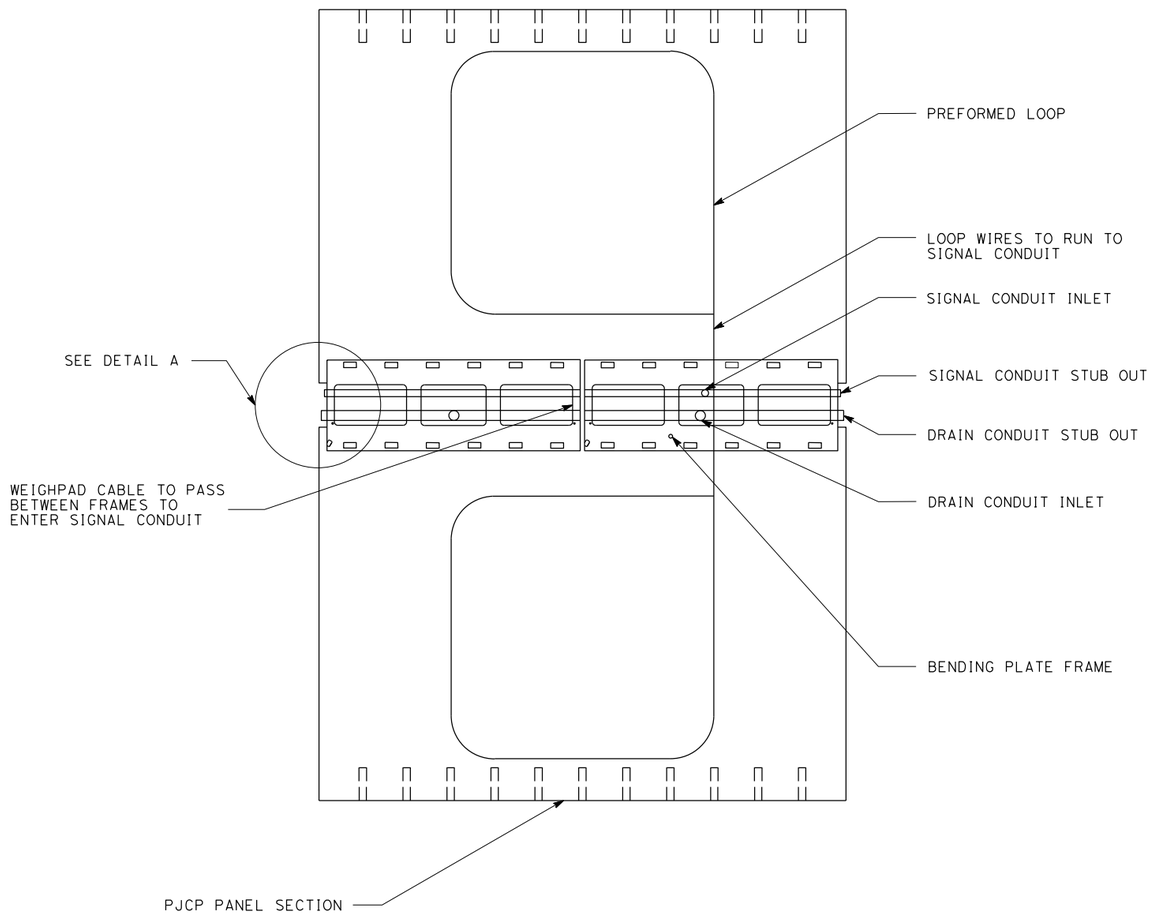

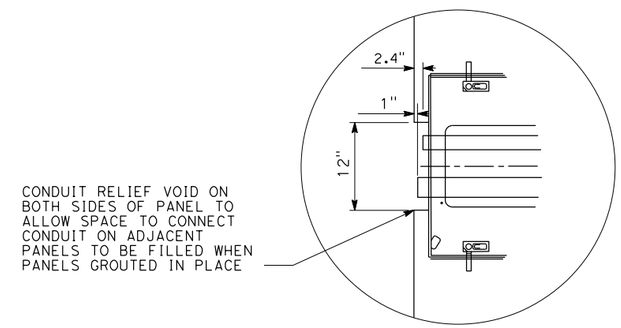

DETAIL A

NO SCALE

DESIGN	BY PARAS BATTH	CHECKED SEAN CHARLES	
DETAILS	BY	CHECKED	
QUANTITIES	BY	CHECKED	

PREPARED FOR THE STATE OF CALIFORNIA DEPARTMENT OF TRANSPORTATION

DIVISION OF ENGINEERING SERVICES
ARCHITECTURAL AND STRUCTURAL DESIGN

BRIDGE NO. 23W0001L
POST MILE 14.8

WESTBOUND CORDELIA CVEF

ELECTRICAL SITE DETAILS
WEIGH-IN-MOTION SYSTEM

SHEET **EE11-16**

0421000155wj1116.dgn
DOES SD imperial Rev.1/07 5/11/2023 1:48:47 PM

ORIGINAL SCALE IN INCHES FOR REDUCED PLANS 0 1 2 3

CU 0711
EA 0A53T1

DISREGARD PRINTS BEARING EARLIER REVISION DATES → 04/03/23

REVISION DATES (PRELIMINARY STAGE ONLY) SHEET OF

5/11/2023 1:48:47 PM

0421000155wj1116.dgn

DIST.	COUNTY	ROUTE	POST MILES TOTAL PROJECT	SHEET NO.	TOTAL SHEETS
04	Sol	12,80	L1.8/L3.2, 13.4/17.2		

REGISTERED CIVIL ENGINEER DATE

REGISTERED PROFESSIONAL ENGINEER No. Exp. CIVIL STATE OF CALIFORNIA

PLANS APPROVAL DATE

The State of California or its officers or agents shall not be responsible for the accuracy or completeness of electronic copies of this plan sheet.

WMH CORPORATION
11070 White Rock Rd,
Suite 140
Rancho Cordova, CA 95670

SOLANO TRANSPORTATION AUTHORITY
423 Main Street,
SUISUN CITY, CA 94585

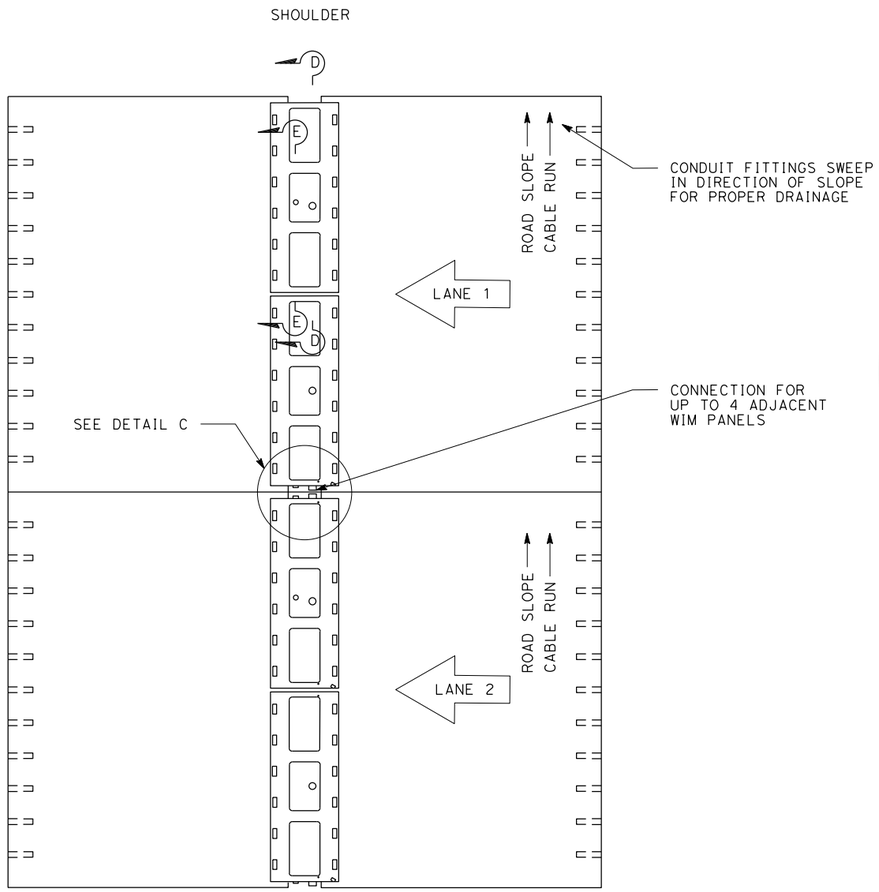

MEDIAN/SHOULDER/ADJACENT LANE

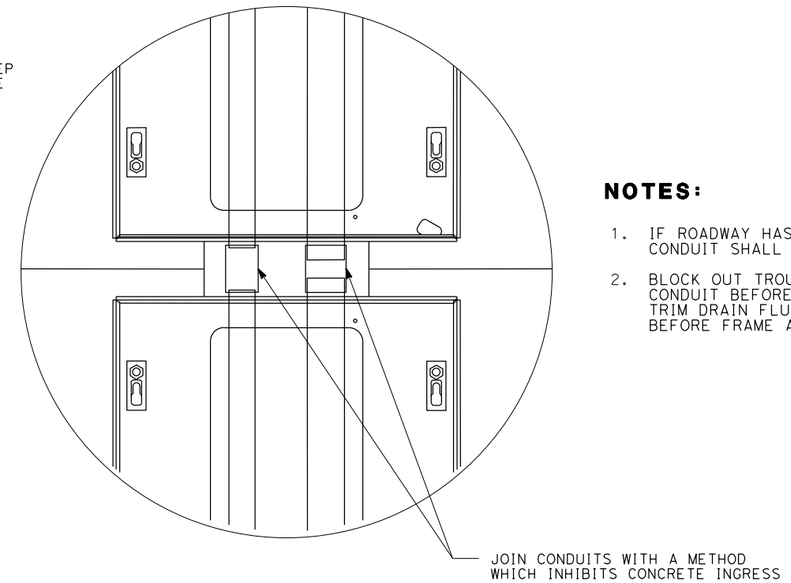

DETAIL C

NOTES:

1. IF ROADWAY HAS MINIMAL/NO SLOPE, INSIDE PANEL SIGNAL AND DRAIN CONDUIT SHALL BE SLOPED AT MINIMUM 2% IN CORRECT DIRECTION.
2. BLOCK OUT TROUGH VOID WITH DENSE FOAM. CAP SIGNAL AND DRAIN CONDUIT BEFORE POURING CONCRETE TO PREVENT FILLING WITH CONCRETE. TRIM DRAIN FLUSH WITH TROUGH AFTER CURE. TRIM SIGNAL CONDUIT TO BEFORE FRAME AND AT LEAST 0.5" ABOVE DRAIN.

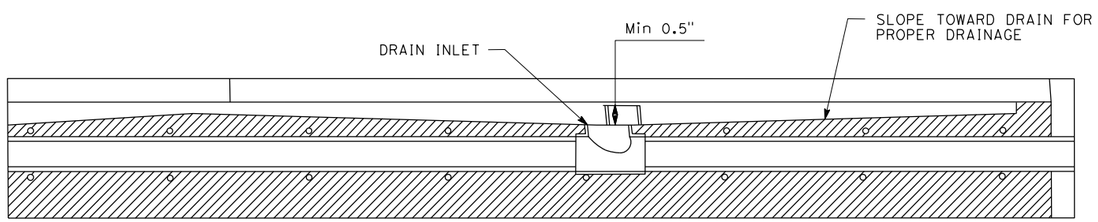

SECTION D-D

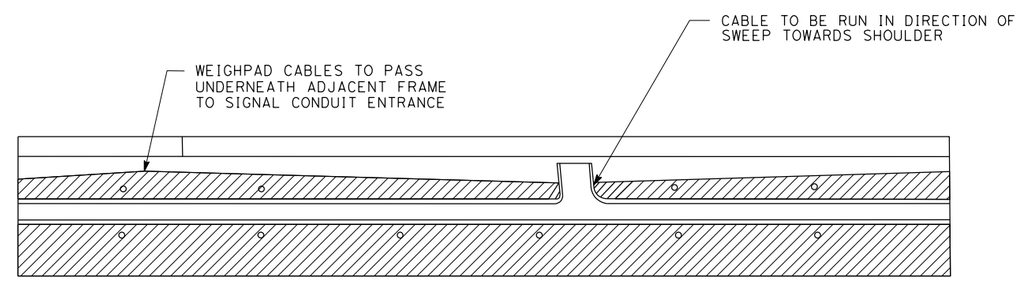

SECTION E-E

NO SCALE

	BY	CHECKED
DESIGN	PARAS BATTH	SEAN CHARLES
DETAILS		
QUANTITIES		

PREPARED FOR THE STATE OF CALIFORNIA DEPARTMENT OF TRANSPORTATION

DIVISION OF ENGINEERING SERVICES
ARCHITECTURAL AND STRUCTURAL DESIGN

BRIDGE NO. 23W0001L
POST MILE 14.8

WESTBOUND CORDELIA CVEF

ELECTRICAL SITE DETAILS
WEIGH-IN-MOTION SYSTEM

SHEET **EE11-17**

0421000155wj1117.dgn
DOES SD imperial Rev.1/07 5/11/2023 1:48:51 PM

ORIGINAL SCALE IN INCHES FOR REDUCED PLANS 0 1 2 3

CU 0711
EA 0A53T1

DISREGARD PRINTS BEARING EARLIER REVISION DATES → 04/03/23

REVISION DATES (PRELIMINARY STAGE ONLY) SHEET OF

5/11/2023 1:48:51 PM
0421000155wj1117.dgn

DIST.	COUNTY	ROUTE	POST MILES TOTAL PROJECT	SHEET NO.	TOTAL SHEETS
04	Sol	12,80	L1.8/L3.2, 13.4/17.2		

REGISTERED CIVIL ENGINEER DATE

REGISTERED PROFESSIONAL ENGINEER No. Exp. CIVIL STATE OF CALIFORNIA

PLANS APPROVAL DATE

The State of California or its officers or agents shall not be responsible for the accuracy or completeness of electronic copies of this plan sheet.

WMH CORPORATION
11070 White Rock Rd,
Suite 140
Rancho Cordova, CA 95670

SOLANO TRANSPORTATION AUTHORITY
423 Main Street,
SUISUN CITY, CA 94585

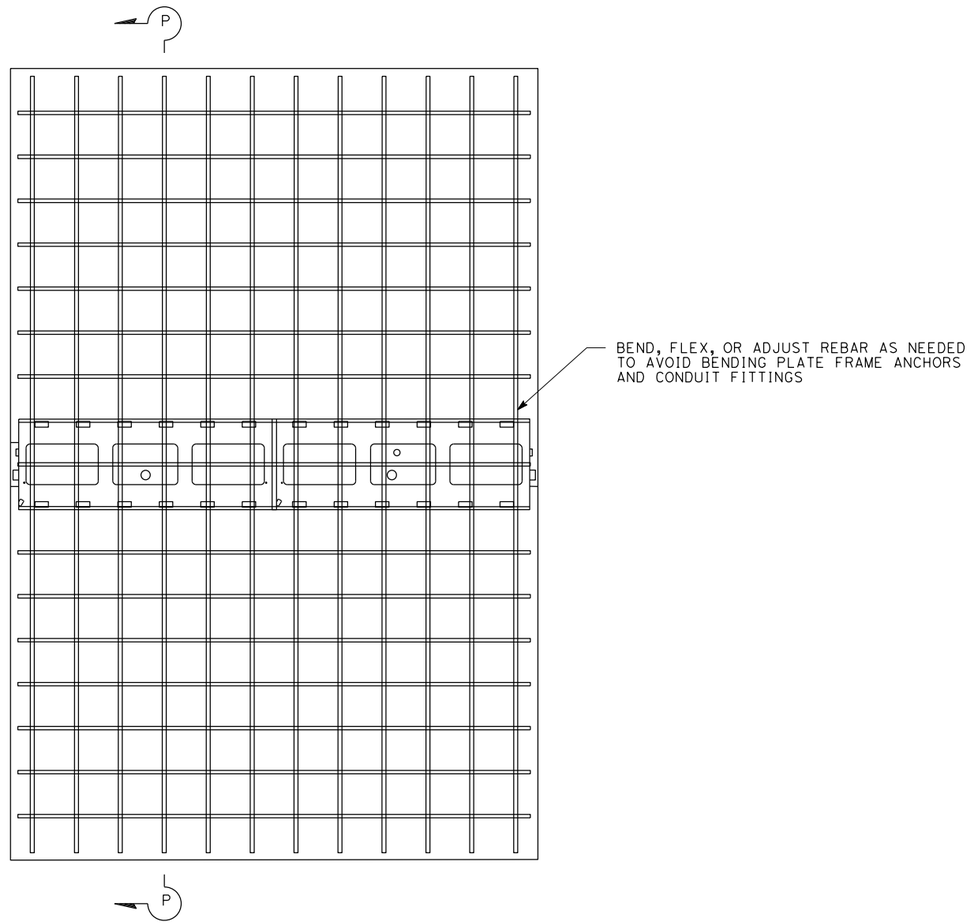

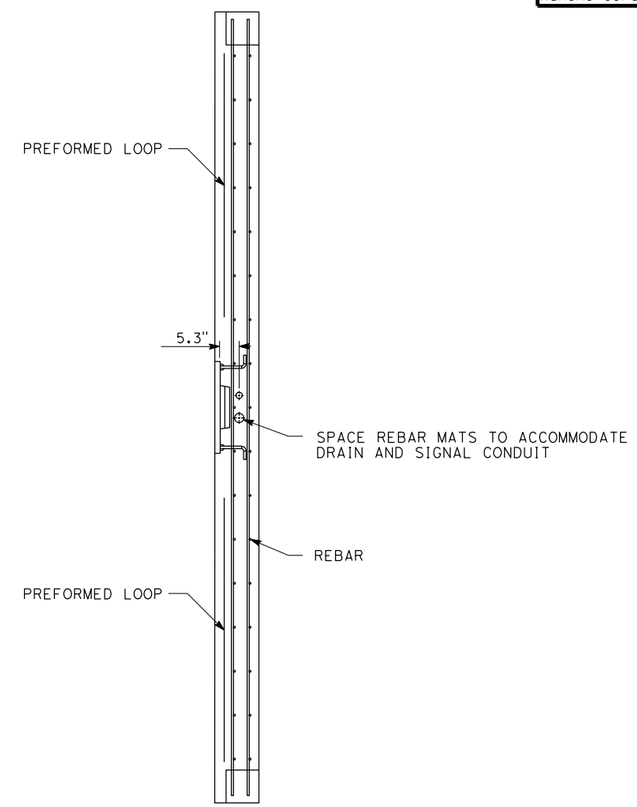

SECTION P-P

NO SCALE

	BY	CHECKED
DESIGN	PARAS BATTH	SEAN CHARLES
DETAILS	BY	CHECKED
QUANTITIES	BY	CHECKED

PREPARED FOR THE STATE OF CALIFORNIA DEPARTMENT OF TRANSPORTATION

DIVISION OF ENGINEERING SERVICES
ARCHITECTURAL AND STRUCTURAL DESIGN

BRIDGE NO. 23W0001L
POST MILE 14.8

WESTBOUND CORDELIA CVEF

ELECTRICAL SITE DETAILS
WEIGH-IN-MOTION SYSTEM

SHEET **EE11-18**

0421000155wj1118.dgn
DOES SD imperial Rev.1/07 5/11/2023 1:48:56 PM

ORIGINAL SCALE IN INCHES FOR REDUCED PLANS 0 1 2 3

CU 0711
EA 0A53T1

DISREGARD PRINTS BEARING EARLIER REVISION DATES → 04/03/23

REVISION DATES (PRELIMINARY STAGE ONLY) SHEET OF

5/11/2023 1:48:56 PM

0421000155wj1118.dgn

DIST.	COUNTY	ROUTE	POST MILES TOTAL PROJECT	SHEET NO.	TOTAL SHEETS
04	Sol	12,80	L1.8/L3.2, 13.4/17.2		

REGISTERED CIVIL ENGINEER DATE

REGISTERED PROFESSIONAL ENGINEER No. Exp. CIVIL STATE OF CALIFORNIA

PLANS APPROVAL DATE

The State of California or its officers or agents shall not be responsible for the accuracy or completeness of electronic copies of this plan sheet.

WMH CORPORATION
11070 White Rock Rd,
Suite 140
Rancho Cordova, CA 95670

SOLANO TRANSPORTATION AUTHORITY
423 Main Street,
SUISUN CITY, CA 94585

WIM DETECTOR DESIGNATION:

W N-1

W = WEIGHT DETECTOR
P = PIEZO AXLE SENSOR

N = NORTHBOUND LANES (NB)
S = SOUTHBOUND LANES (SB)
E = EASTBOUND LANES (EB)
W = WESTBOUND LANES (WB)

NUMBER OF LANES FROM LEFT WITH RESPECT TO DIRECTION OF TRAFFIC:
1 = FIRST LANE FROM LEFT
2 = SECOND LANE FROM LEFT
3 = THIRD LANE FROM LEFT
4 = FOURTH LANE FROM LEFT
5 = FIFTH LANE FROM LEFT
6 = SIXTH LANE FROM LEFT

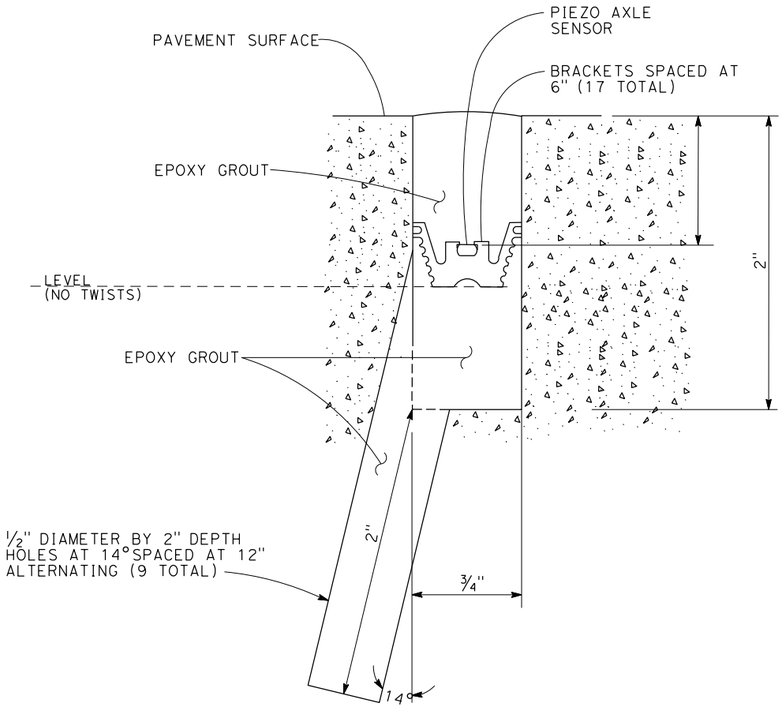

SECTION A-A

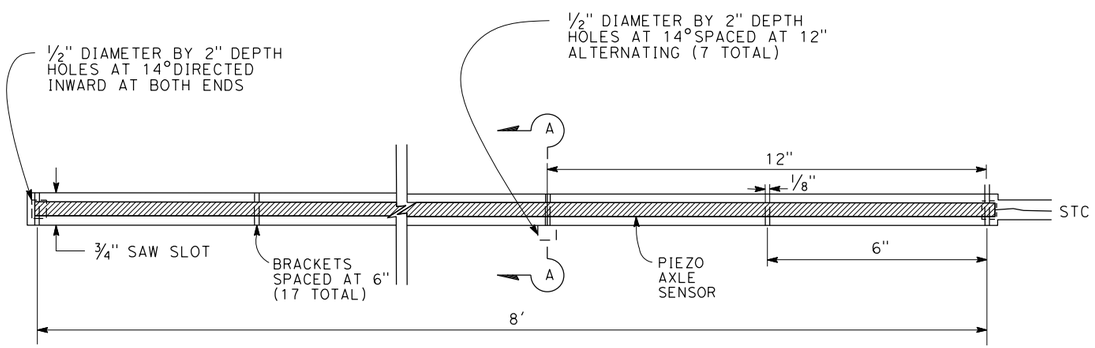

TOP VIEW

PIEZO AXLE SENSOR INSTALLATION

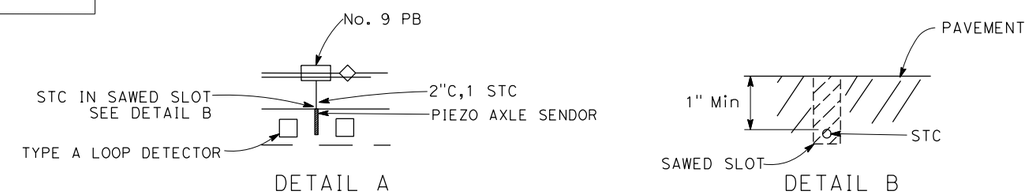

PIEZO AXLE SENSOR TERMINATION DETAILS

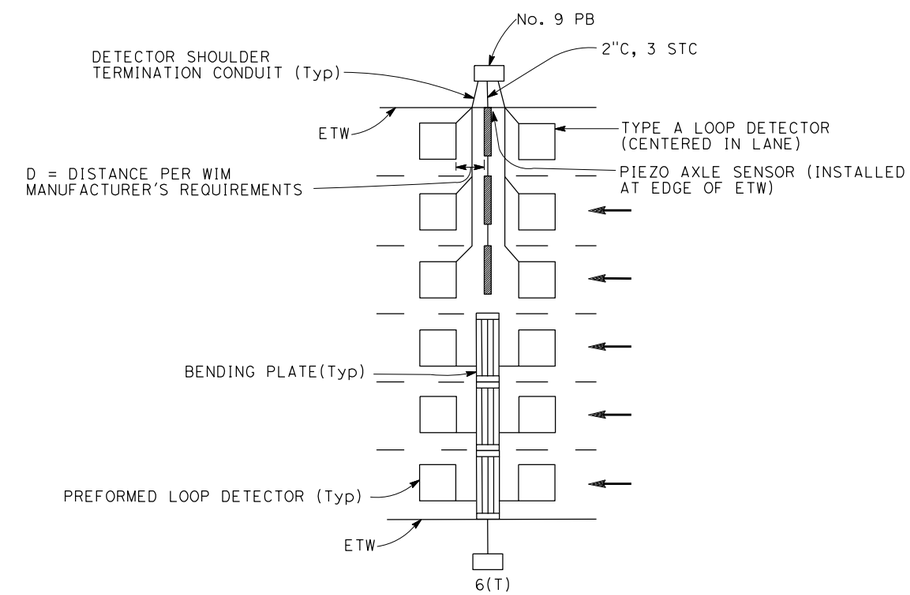

LOOP DETECTOR AND PIEZO AXLE SENSOR PLACEMENT DETAILS

NO SCALE

	BY	CHECKED
DESIGN	PARAS BATTH	SEAN CHARLES
DETAILS	BY	CHECKED
QUANTITIES	BY	CHECKED

PREPARED FOR THE STATE OF CALIFORNIA DEPARTMENT OF TRANSPORTATION

DIVISION OF ENGINEERING SERVICES
ARCHITECTURAL AND STRUCTURAL DESIGN

BRIDGE NO. 23W0001L
POST MILE 14.8

WESTBOUND CORDELIA CVEF

ELECTRICAL SITE DETAILS
WEIGH-IN-MOTION SYSTEM

SHEET **EE11-19**

0421000155wj1119.dgn
DOES SD imperial Rev.1/07 5/11/2023 1:49:00 PM

ORIGINAL SCALE IN INCHES FOR REDUCED PLANS 0 1 2 3

CU 0711
EA 0A53T1

DISREGARD PRINTS BEARING EARLIER REVISION DATES → 04/03/23

REVISION DATES (PRELIMINARY STAGE ONLY) SHEET OF

5/11/2023 1:49:00 PM

0421000155wj1119.dgn

WESTBOUND CORDELIA CVEF
COMMERCIAL VEHICLE MANAGEMENT SYSTEM

Commercial Vehicle Management System Definition

For the purposes of this document, Commercial Vehicle Management System (CVMS) is defined as the technology to consolidate the screening, sorting, and routing of commercial vehicles into a user interface that focuses inspection and enforcement efforts on vehicles with the worst potential condition.

Screening and Sorting

Commercial vehicles will be screened using inputs from the technologies described in the ***CVMS Technology Deployment*** section below, then sorted and routed based on the criteria discussed in the ***Observation Lane Vehicle Assignment Criteria*** section below. The goal of this effort is to allow CHP personnel to focus inspection and enforcement efforts on vehicles with the worst potential condition(s).

If critical safety, enforcement, or weight condition(s) are detected, the vehicle will be sorted closer to the CVEF's Observation Window (Observation) to be better visually inspected by CHP personnel. Vehicles with no anomaly observed by the screening technology will be sorted farther from Observation to maximize available space in the interior lane queues.

Routing and Alerts

In order for the driver to understand which Observation Lane they need to be in after being screened, the system must provide them routing information. This is done automatically using Variable Message Signs (VMS) that display truck specific directions to the Observation Lane selected by the CVMS. Drivers that do not follow the directions they are given and proceed to a lane farther from Observation, are flagged in the CVMS to alert enforcement personnel with configurable audible and visual alerts.

As vehicles approach Observation (viewed from left to right), CHP personnel can be alerted to conditions detected by the screening technology with configurable audible and visual alerts through the CVMS. An additional configuration option could provide CHP the ability to automatically stop vehicles at the Observation signal limit lines that meet critical criteria.

If a condition is detected through the screening process or observed by CHP personnel, or CHP personnel decide to inspect a vehicle further, it can be routed to a specific area within the CVEF. The vehicle in question is stopped when it reaches the Observation signal limit line, vehicles in the lane(s) to their right are also stopped, then the subject vehicle is given a green arrow to enter the Site. Once the subject vehicle is clear of the intersection, adjacent vehicles are given staggered green signals to continue their journey. Note that vehicles to the left of the subject vehicle are not required to stop.

Once the subject vehicle enters the Site, they are directed to their destination through a series of VMSs that display truck specific directions at key decision points along their route. Fixed signage and Public Address (PA) systems are provided as a back-up to the technology.

The CVMS will include the ability to direct vehicles between the Inspection Bays and Observation Room, monitoring Inspection Bay Status (Open, Closed, and Busy), providing notifications for vehicles being directed to inspection, and providing inspectors vehicle information from the CVMS Technology Deployment outputs (License Plate, Photos, etc.).

CVMS Technology Deployment

The following Technology is proposed for deployment at the Westbound Cordelia CVEF by the CVMS Integrator. Additional Technology consisting of Signal Heads (SIG), Variable Message Signs (VMS), Weigh-in-Motion Systems (WIM), Multi-Platform and Single-Platform Static Scales, and PrePass/Drivewyze Vendor Bypass Technology (VBT) is being installed by the WB-CCVEF CM/GC contract and will require integration for input/controls by the CVMS Technology Control System.

Technology	***Location(1)***	***Notes/Output***
Vehicle Identification System (VIS)	IS, PS, PR, PV, SR, SV, & BV	Identifies/Re-identifies Vehicles for adding data to their record
Weigh-in-Motion System (WIM) Installed by WB-CCVEF C	IS & PS	Alert for Overweight (amount specified at facility)
Vehicle Dimension Scanner (VDS)	IS & PS	Alert for over-height and/or over-length/width
DOT Number Reader (DOT)	IS & PS	Alert for Federal Out-of-Service Orders
CA Number Reader (CNR)	IS & PS	Alert for California Motor Carrier of Property Permit
Declared Weight Decal Reader (DWR)	IS & PS	Alert for Declared Weight Decal not matching WIM output (amount specified at facility)
License Plate Reader (LPR)	IS & PS	Provides Vehicle Recognition for CHP personnel
Overview Camera (OVC)	IS, PS, & SV	Provides Vehicle Recognition for CHP personnel
Haz-Mat Placard Reader (HMP)	IS & PS	Alert for Hazardous Materials (Table 1 & 2 below)
CVSA Decal Reader (CVR)	IS & PS	Alert for missing/expired CVSA Sticker
Tire Anomaly and Classification System (TACS)	IS & PS	Alert for Inconsistent Tires
Thermal Brake Detector (TBD)	PV	Alert for Inconsistent Brakes(2)
Variable Message Sign (VMS)	OC, PR, PV, & SR	Provides feedback/direction to vehicles
Signal Heads (SIG)	PV & SR	Provides feedback/direction to vehicles
Over-Height Detector (OHD)	PV	Alert for Over-Height(2)

Note 1: Technology will be deployed at the following locations:

- Initial Screening (IS): I-80 WB Mainline, SR-12 WB Mainline, and WB SR-12 Chadbourne On-Ramp
- Open/Closed (OC): I-80 WB Mainline and SR-12 WB Mainline
- Primary Screening (PS): CVEF Off-ramps from I-80 WB and SR-12 WB
- Primary Routing (PR): CVEF Off-ramps from I-80 WB and SR-12 WB
- Primary Verification (PV): Observation Lane Entrance
- Secondary Verification (SV): Observation Lane Exit, Site Entrance, and Site Exit
- Secondary Routing (SR): Key Decision Points within Site
- Bypass Verification (BV): I-80 WB Mainline (Suisun Creek), I-80 WB Chadbourne Off-Ramp, WB SR-12 Chadbourne Off-Ramp, I-80 WB Mainline past CVEF Off-Ramp, and SR-12 Connector past CVEF Off-Ramp

Note 2: Thermal Brake Detector (TBD) and Over-Height Detector (OHD) are not utilized for the Observation Lane Vehicle Assignment Criteria discussed below since they occur at the Primary Verification (PV): Observation Lane Entrance which is located after the Primary Routing (PR): CVEF Off-ramps from I-80 WB and SR-12 WB. Any alerts generated by this technology will be addressed by the Operator at the Stop Bar for the Lane (A-D) in which the alert occurs

Observation Lane Vehicle Assignment Criteria

- **Lane A** (Right Lane - Nearest observation windows): Speed 3-5 MPH[3]
  - Alert for Overweight (amount specified at facility)[4]
  - Alert for Over-height and/or Over-length/width[4]
  - Alert for Tire Anomaly
  - Alert for Federal Out-of-Service Orders
  - Alert for California Motor Carrier of Property Permit
- **Lane B** (Right-Middle Lane): Speed 5-10 MPH[3]
  - Overflow from Lane A
  - Table 1 Hazardous Materials Placards (See Table Below)
  - Alert for Declared Weight[5]
  - Alert for No CVSA Decal
- **Lane C** (Left-Middle Lane): Speed 10-20 MPH[3]
  - Overflow from Lane B
  - Table 2 Hazardous Materials Placards (See Table Below)
  - Alert for expired CVSA Decal (3+ months)
- **Lane D** (Left Lane - Furthest from observation windows): Speed 20-30 MPH[3]
  - Valid CVSA Decal
  - No anomaly (weight/height/length) observed by screening technology

Note 3: Speed Limits for Lanes A-D can be independently set based on traffic conditions
Note 4: Overweight, Over-height and/or Over-length/width vehicles will be checked against issued Caltrans Permits
Note 5: Declared weight is used for secondary weight determination

Hazardous Materials Placards - Table 1
Explosives, 1.1, 1.2, 1.3, 1.4, 1.5, 1.6
Poison Gas, 2.3
Dangerous When Wet, 4.3
Organic Peroxide, 5.2
Poison and Poison Inhalation Hazard, 6.1
Radioactive, 7

Hazardous Materials Placards - Table 2
Flammable Gas, 2.1
Non-Flammable Gas, 2.2
Flammable, 3
Flammable Solid, 4.1
Spontaneously Combustible, 4.2
Oxidizer, 5.1
Corrosive, 8
Class 9 and Dangerous