Dist	COUNTY	ROUTE	POST MILES TOTAL PROJECT	SHEET No.	TOTAL SHEETS
04	Sol	37	10.9	1	

STATE OF CALIFORNIA

DEPARTMENT OF TRANSPORTATION

PROJECT PLANS FOR CONSTRUCTION ON AND ADJACENT TO

STATE HIGHWAY

IN SOLANO COUNTY
IN VALLEJO
FROM 0.5 MILE SOUTH OF FAIRGROUNDS ROAD UNDERCROSSING
TO 0.2 MILE NORTH OF FAIRGROUNDS ROAD UNDERCROSSING

TO BE SUPPLEMENTED BY STANDARD PLANS DATED 2018

INDEX OF PLANS

SHEET NO	DESCRIPTION
1	TITLE SHEET AND LOCATION MAP
2-21	TYPICAL CROSS SECTIONS
22	KEY MAP AND LINE INDEX
23	PROJECT CONTROL
24-26	LAYOUT
27-29	PROFILE AND SUPERELEVATION DIAGRAM
30-61	CONSTRUCTION DETAILS
62-83	TEMPORARY WATER POLLUTION CONTROL PLAN AND QUANTITIES
84-86	CONTOUR GRADING
87-134	DRAINAGE PLAN, PROFILES, DETAILS AND QUANTITIES
135-137	UTILITY PLAN
138	CONSTRUCTION AREA SIGNS
139-145	MOTORIST INFORMATION PLAN, DETAILS AND QUANTITIES
146-179	STAGE CONSTRUCTION AND TRAFFIC HANDLING PLAN, DETAILS AND QUANTITIES
180-189	PAVEMENT DELINEATION PLAN, DETAILS AND QUANTITIES
190-208	SIGN PLAN, DETAILS AND QUANTITIES
209-213	SUMMARY OF QUANTITIES
214-218	RETAINING WALL PLAN AND DETAILS
219-224	LANDSCAPING DETAILS
225	IRRIGATION SPRINKLER SCHEDULE
226-240	IRRIGATION REMOVAL PLAN AND IRRIGATION PLAN
241-252	PLANT LEGEND, PLANTING PLAN AND PLANTING QUANTITIES
253-262	EROSION CONTROL LEGEND, PLAN AND QUANTITIES
263-353	ELECTRICAL PLANS

THE STANDARD PLANS LIST APPLICABLE TO THIS CONTRACT IS INCLUDED IN THE NOTICE TO BIDDERS AND SPECIAL PROVISIONS BOOK.

LOCATION MAP

PRELIMINARY PLANS SUBJECT TO REVISION

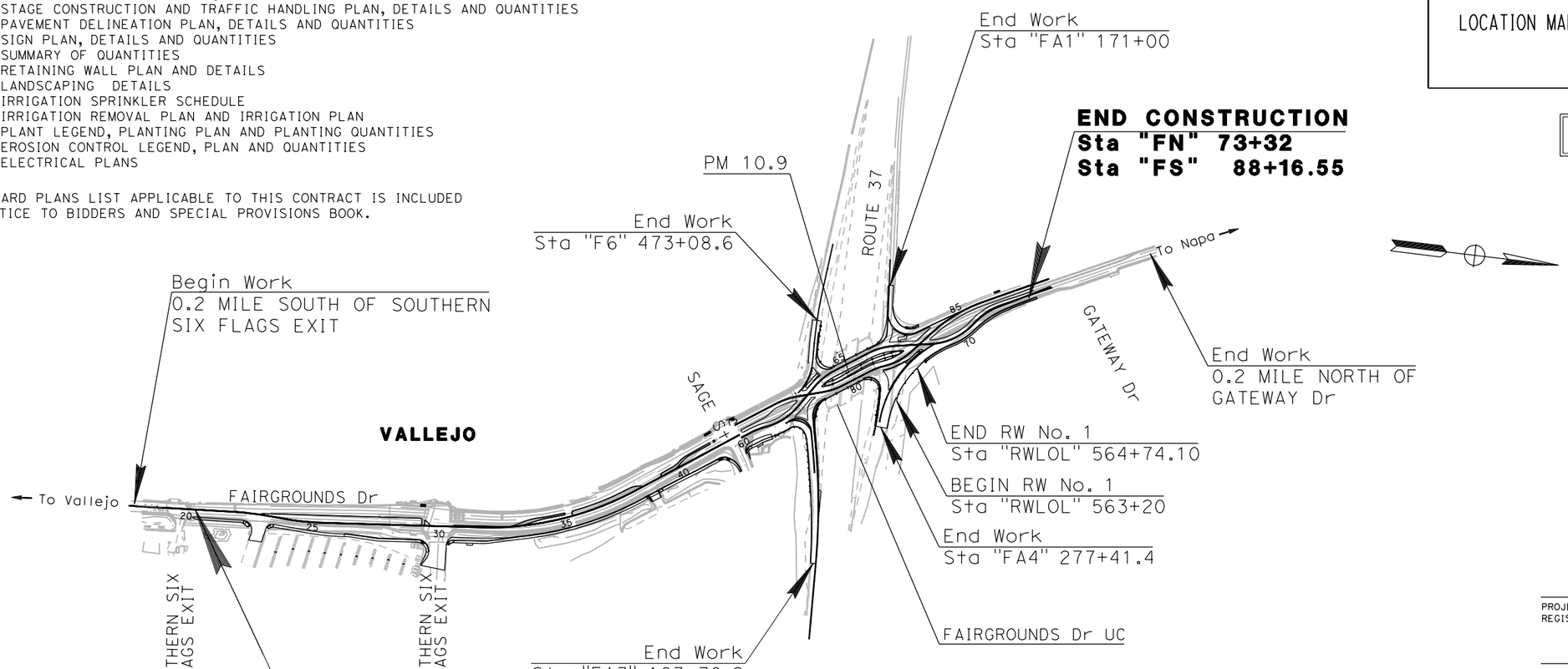

100% SUBMITTAL
APRIL, 2023

NO SCALE

THE CONTRACTOR SHALL POSSESS THE CLASS (OR CLASSES) OF LICENSE AS SPECIFIED IN THE "NOTICE TO BIDDERS."

PROJECT ENGINEER DATE
REGISTERED CIVIL ENGINEER

PLANS APPROVAL DATE

THE STATE OF CALIFORNIA OR ITS OFFICERS OR AGENTS SHALL NOT BE RESPONSIBLE FOR THE ACCURACY OR COMPLETENESS OF SCANNED COPIES OF THIS PLAN SHEET.

REGISTERED PROFESSIONAL ENGINEER No. Exp. CIVIL STATE OF CALIFORNIA

WMH CORPORATION
11070 WHITE ROCK RD, SUITE 140
RANCHO CORDOVA, CA 95670

SOLANO TRANSPORTATION AUTHORITY
1 HARBOR CENTER 130
SUISUN CITY, CA 94585

CONTRACT No.	04-4A4414
PROJECT ID	0400020584

APPROVED AS TO IMPACT ON STATE FACILITIES AND CONFORMANCE WITH APPLICABLE STATE STANDARDS AND PRACTICES AND THAT TECHNICAL OVERSIGHT WAS PERFORMED.

CONSULTANT DESIGN MANAGER | CALTRANS DESIGN OVERSIGHT APPROVAL | REGISTRATION No. | LICENSE Exp DATE | DATE SIGNED

X:\SR 37_FAIRGROUNDS DRIVE\000_CAD\Sheets\001-Title\044A4414ab001.dgn

LAST REVISION 00-00-00 | DATE PLOTTED => 4/10/2023 TIME PLOTTED => 9:57:02 AM

Dist	COUNTY	ROUTE	POST MILES TOTAL PROJECT	SHEET No.	TOTAL SHEETS
04	Sol	37	10.9		

REGISTERED CIVIL ENGINEER DATE

PLANS APPROVAL DATE

REGISTERED PROFESSIONAL ENGINEER No. Exp. CIVIL STATE OF CALIFORNIA

THE STATE OF CALIFORNIA OR ITS OFFICERS OR AGENTS SHALL NOT BE RESPONSIBLE FOR THE ACCURACY OR COMPLETENESS OF SCANNED COPIES OF THIS PLAN SHEET.

WMH CORPORATION
11070 WHITE ROCK RD
SUITE 140
RANCHO CORDOVA
CA 95670

SOLANO TRANSPORTATION AUTHORITY
1 HARBOR CENTER
SUITE 130
SUISUN CITY, CA 94585

PRELIMINARY PLANS SUBJECT TO REVISION

NOTES:

1. SUPERELEVATIONS ARE SHOWN ON THE SUPERELEVATION DIAGRAMS
2. FOR LOCATIONS, LIMITS AND DETAILS OF RETAINING WALLS, SEE RETAINING WALL LAYOUT.
3. DIMENSIONS OF THE PAVEMENT STRUCTURES (STRUCTURAL SECTIONS) ARE SUBJECT TO TOLERANCES SPECIFIED IN THE STANDARD SPECIFICATIONS.
4. FOR LOCATIONS, LIMITS, AND TYPES OF CURB AND DIKE, SEE LAYOUT SHEETS.
5. FOR LOCATIONS, LIMITS, AND TYPES OF MGS AND CONCRETE BARRIER, SEE CONSTRUCTION DETAILS.
6. FOR LOCATIONS, LIMITS, AND DETAILS OF DITCHES AND BIOFILTRATION SWALES, SEE DRAINAGE PLANS.
7. DIKES AND CONCRETE BARRIERS SHALL NOT BE PLACED ON TOP OF RHMA-O.
8. FINISHED GRADE IS DEFINED AS ON TOP OF RHMA-G. RHMA-O (NOT GRAPHICALLY SHOWN) SHALL BE PLACED ON TOP OF FINISHED GRADE.
9. BOTTOM OF STRUCTURAL SECTION SHALL MATCH BOTTOM OF EXISTING STRUCTURAL SECTION.
10. SEG SHALL BE EXTENDED A MINIMUM OF 2′ PAST THE EDGE OF PAVEMENT.

DESIGN DESIGNATION (FAIRGROUNDS DRIVE):

ADT (2025)	28,600	D = 47%
ADT (2045)	37,600	T = 1.3%
DHV	474	V = 40 mph (SOUTH OF SAGE St)
ESAL	805,136	V = 25 mph (NORTH OF SAGE St)
		TRAFFIC INDEX = 9

PAVEMENT CLIMATE REGION: LOW MOUNTAIN

ABBREVIATIONS:

ASB	AGGREGATE SUBBASE
ATPB	ASPHALT TREATMENT PERMEABLE BASE
BL	BIKE LANE
BOW	BACK OF WALK
HDAS	HMA DIKE (TYPE A) & SIDEWALK
LOG	LIP OF GUTTER
PET (CASE A)	PAVEMENT EDGE TREATMENT (CASE A)
RHMA-G	RUBBERIZED HOT MIX ASPHALT (GAP GRADED)
RHMA-O	RUBBERIZED HOT MIX ASPHALT (OPEN GRADED)
SR	SUPERELEVATION RATE (SEE PROFILE/ SUPERELEVATION SHEETS OR CONSTRUCTION DETAIL SHEETS)
SEG	SUBGRADE ENHANCEMENT GEOTEXTILE
THRU	THROUGH
VTAC	CITY OF VALLEJO TYPE A CURB
VCGS	CITY OF VALLEJO STANDARD VERTICAL CURB, GUTTER, & SIDEWALK

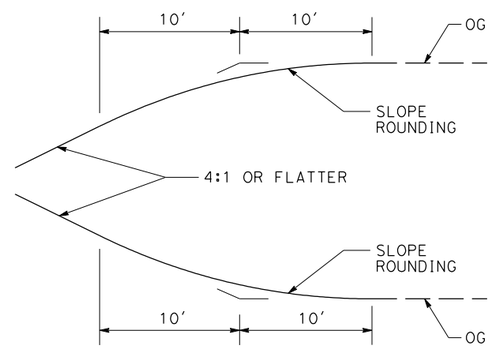

TYPICAL SLOPE ROUNDING DETAIL

EXISTING STRUCTURE SECTIONS PER AS-BUILT JOB No. P85117-1/2, 04-1Q0104, AND 10-327014

A
- 0.30′ AC
- 0.65′AB
- 0.65′ Lt ASB

B
- 0.45′-1.30′ AC
- 0.60′-1.20′ AB
- 1.20′ AS

C
- 0.40′ AC (TYPE B)
- 0.60′ Cl 2 AB
- 1.00′ Cl 1 Perm Mtl (BLANKET)

D
- 0.20′ RHMA-G
- 0.30′ AC (TYPE B)
- 0.55′ Cl 2 AB
- 1.65′ Cl 1 Perm Mtl (BLANKET)

E
- 0.20′ RHMA-G
- 0.25′ AC (TYPE B)
- 0.25′ ATPB
- 0.60′ Cl 2 AB
- 1.20′ Cl 1 Perm Mtl (BLANKET)

F
- 0.20′ RHMA-G
- 0.25′ AC (TYPE B)
- 0.85′ Cl 2 AB
- 1.20′ Cl 1 Perm Mtl (BLANKET)

G
- 0.20′ RHMA-G
- 0.25′ AC (TYPE B)
- 0.25′ ATPB
- 0.60′ Cl 2 AB
- 1.20′ Cl 4 AS

H
- 0.20′ RHMA-G
- 0.25′ AC (TYPE B)
- 0.85′ Cl 2 AB
- 1.20′ Cl 4 AS

I
- 0.15′ RHMA-G
- 0.30′ AC (TYPE B)
- 0.85′ Cl 2 AB
- 1.20′ Cl 2 AS

J
- 0.15′ RHMA-G
- 0.30′ AC (TYPE B)
- 0.25′ ATPB
- 0.60′ Cl 2 AB
- 1.20′ Cl 2 AS

K
- 0.15′ RHMA-G
- 0.15′ AC (TYPE B)
- 0.55′ Cl 2 AB
- 0.75′ Cl 4 AS

L
- 0.50′ AC (TYPE B)
- 0.80′ Cl 2 AB
- 1.20′ Cl 2 AS

M
- 0.50′ AC (TYPE B)
- 0.20′ ATPB
- 0.60′ Cl 2 AB
- 1.20′ Cl 4 AS

N
- 0.50′ AC (TYPE B)
- 0.35′ Cl 2 AB
- 0.75′ Cl 4 AS

O
- 0.20′ RHMA-G
- 0.10′ AC (TYPE B)
- 0.55′ Cl 2 AB
- 1.65′ Cl 1 Perm Mtl (BLANKET)

P
- 0.20′ RHMA-G
- 0.25′ AC (TYPE B)
- 0.25′ ATPB
- 0.60′ Cl 2 AB
- 1.20′ Cl 1 Perm Mtl (BLANKET)

Q
- 0.20′ RHMA-G
- 0.25′ AC (TYPE B)
- 0.85′ Cl 2 AB
- 1.20′ Cl 1 Perm Mtl (BLANKET)

PROPOSED TYPICAL PAVEMENT STRUCTURE SECTIONS (PRELIMINARY):

1
- 0.10′ RHMA-O
- 0.20′ RHMA-G

2
- 0.10′ RHMA-O
- RHMA-G (VARIABLE THICKNESS, 0.10′ Min, 0.20′ Max)

3
- 0.10′ RHMA-O
- 0.20′ RHMA-G
- 0.25′ HMA-A
- LCB (VARIABLE THICKNESS, 0.25′ Min)

4
- 0.10′ RHMA-O
- 0.20′ RHMA-G
- 0.85′ HMA-A
- 2.00′ Cl 3 PERMEABLE BLANKET
- 2.00′ Cl 2 AS
- SEG, Cl B1

5
- 0.10′ RHMA-O
- 0.20′ RHMA-G
- 0.85′ HMA-A
- SEG, Cl B1

6
- 0.10′ RHMA-O
- 0.20′ RHMA-G
- 0.25′ HMA-A
- 0.65′ Cl 2 AB
- 0.70′ Cl 2 AS
- SEG, Cl B1

7A
- 0.10′ RHMA-O
- 0.20′ RHMA-G
- HMA-A (VARIABLE THICKNESS, 0.15′ Min)

7B
- 0.10′ RHMA-O
- 0.20′ RHMA-G
- HMA-A (VARIABLE THICKNESS, 0.15′ Min)
- SEG, Cl B1

8
- 0.10′ RHMA-O
- 0.20′ RHMA-G
- 0.80′ HMA-A
- SEG, Cl B1

9A
- 0.10′ RHMA-O
- 0.20′ RHMA-G
- 0.25′ HMA-A
- 0.65′ Cl 2 AB
- Cl 3 PERMEABLE BLANKET (VARIABLE THICKNESS, 0.90′ Min)
- SEE NOTE 9
- SEG, Cl B1

9B
- 0.10′ RHMA-O
- 0.20′ RHMA-G
- 0.25′ HMA-A
- 0.65′ Cl 2 AB
- 0.90′ Cl 3 PERMEABLE BLANKET
- SEG, Cl B1

10
- 0.10′ RHMA-O
- 0.20′ RHMA-G
- HMA-A (VARIABLE THICKNESS , 0.25′ Min)
- 0.25′ ATPB (MATCH ELEVATION OF Exist ATPB)
- 1.10′ Cl 2 AB
- 2.00′ Cl 3 PERMEABLE MATERIAL
- SEG, Cl B1

11
- 0.10′ RHMA-O
- 0.20′ RHMA-G
- 0.30′ HMA-A
- 0.25′ ATPB (MATCH ELEVATION OF Exist ATPB)
- 1.35′ Cl 2 AB
- 2.00′ Cl 2 AS
- SEG, Cl B1

12
- 0.10′ RHMA-O
- 0.20′ RHMA-G
- 0.85′ HMA-A
- 2.00′ Cl 2 AS
- SEG, Cl B1

13
- 0.10′ RHMA-O
- 0.20′ RHMA-G
- HMA-A (VARIABLE THICKNESS, 0.25′ Min)
- 0.25′ ATPB (MATCH ELEVATION OF Exist ATPB)
- 1.35′ Cl 2 AB
- 2.00′ Cl 2 AS
- SEG, Cl B1

TYPICAL CROSS SECTIONS

NO SCALE

X-1

REVISED BY	DATE REVISED	CALCULATED-DESIGNED BY	CHECKED BY	SUPERVISOR
J.R.	02/15/22	JESUS RICO	CARL GIBSON III	CARL GIBSON III

CONSULTANT FUNCTIONAL SUPERVISOR

STATE OF CALIFORNIA - DEPARTMENT OF TRANSPORTATION

Caltrans

X:\SR 37_FAIRGROUNDS DRIVE\000_CAD\Sheets\005-TypXSections\0418000069ca001.dgn

LAST REVISION 00-00-00 | DATE PLOTTED => 9/2/2022 | TIME PLOTTED => 9:53:33 AM

Dist	COUNTY	ROUTE	POST MILES TOTAL PROJECT	SHEET No.	TOTAL SHEETS
04	Sol	37	10.9		

REGISTERED CIVIL ENGINEER DATE

PLANS APPROVAL DATE

REGISTERED PROFESSIONAL ENGINEER No. Exp. CIVIL STATE OF CALIFORNIA

THE STATE OF CALIFORNIA OR ITS OFFICERS OR AGENTS SHALL NOT BE RESPONSIBLE FOR THE ACCURACY OR COMPLETENESS OF SCANNED COPIES OF THIS PLAN SHEET.

WMH CORPORATION
11070 WHITE ROCK RD
SUITE 140
RANCHO CORDOVA
CA 95670

SOLANO TRANSPORTATION AUTHORITY
1 HARBOR CENTER
SUITE 130
SUISUN CITY, CA 94585

PRELIMINARY PLANS SUBJECT TO REVISION

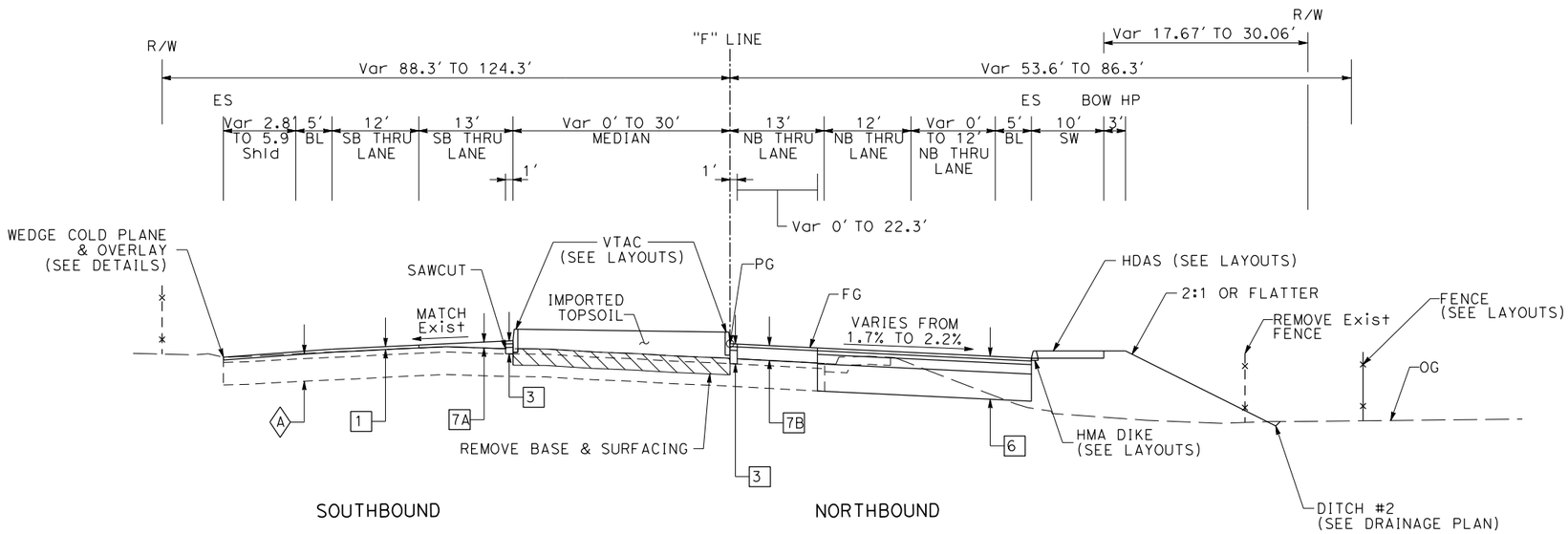

FAIRGROUNDS DRIVE

"F" 22+94.88 TO 24+84.34

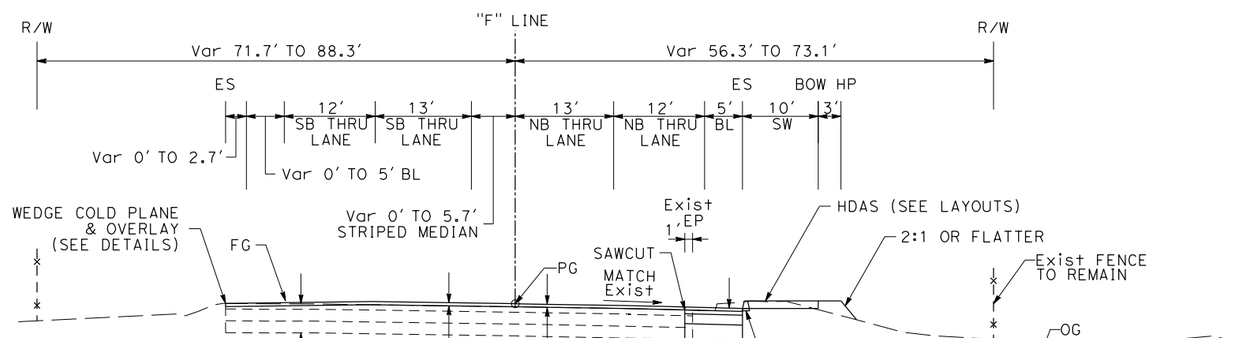

FAIRGROUNDS DRIVE

"F" 20+00 TO 22+94.88

FOR NOTES AND ABBREVIATIONS, SEE SHEET X-1

TYPICAL CROSS SECTIONS

NO SCALE

X-2

REVISED BY	DATE REVISED
J.R.	02/15/22

CALCULATED-DESIGNED BY	CHECKED BY
JESUS RICO	CARL GIBSON III

CONSULTANT FUNCTIONAL SUPERVISOR
CARL GIBSON III

STATE OF CALIFORNIA - DEPARTMENT OF TRANSPORTATION

Caltrans

X:\SR 37_FAIRGROUNDS DRIVE\000_CAD\Sheets\005-TypXSections\0418000069ca002.dgn

LAST REVISION 00-00-00 | DATE PLOTTED => 9/2/2022 TIME PLOTTED => 9:53:52 AM

Dist	COUNTY	ROUTE	POST MILES TOTAL PROJECT	SHEET No.	TOTAL SHEETS
04	Sol	37	10.9		

REGISTERED CIVIL ENGINEER DATE

PLANS APPROVAL DATE

REGISTERED PROFESSIONAL ENGINEER No. Exp. CIVIL STATE OF CALIFORNIA

THE STATE OF CALIFORNIA OR ITS OFFICERS OR AGENTS SHALL NOT BE RESPONSIBLE FOR THE ACCURACY OR COMPLETENESS OF SCANNED COPIES OF THIS PLAN SHEET.

WMH CORPORATION
11070 WHITE ROCK RD
SUITE 140
RANCHO CORDOVA
CA 95670

SOLANO TRANSPORTATION AUTHORITY
1 HARBOR CENTER
SUITE 130
SUISUN CITY, CA 94585

PRELIMINARY PLANS SUBJECT TO REVISION

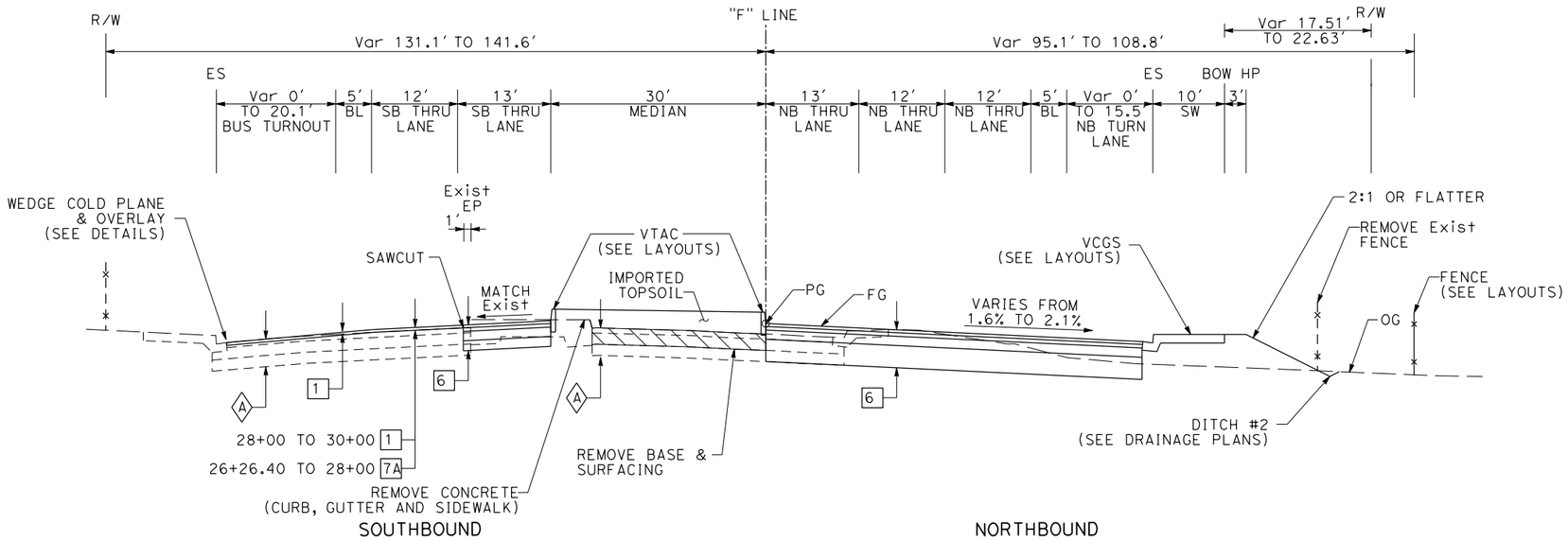

FAIRGROUNDS DRIVE

"F" 26+26.40 TO 30+00

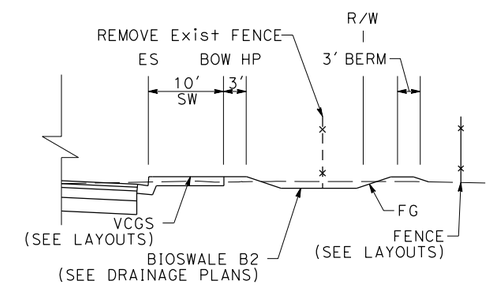

NORTHBOUND DETAIL

FAIRGROUNDS DRIVE

"F" 28+00 TO 29+15

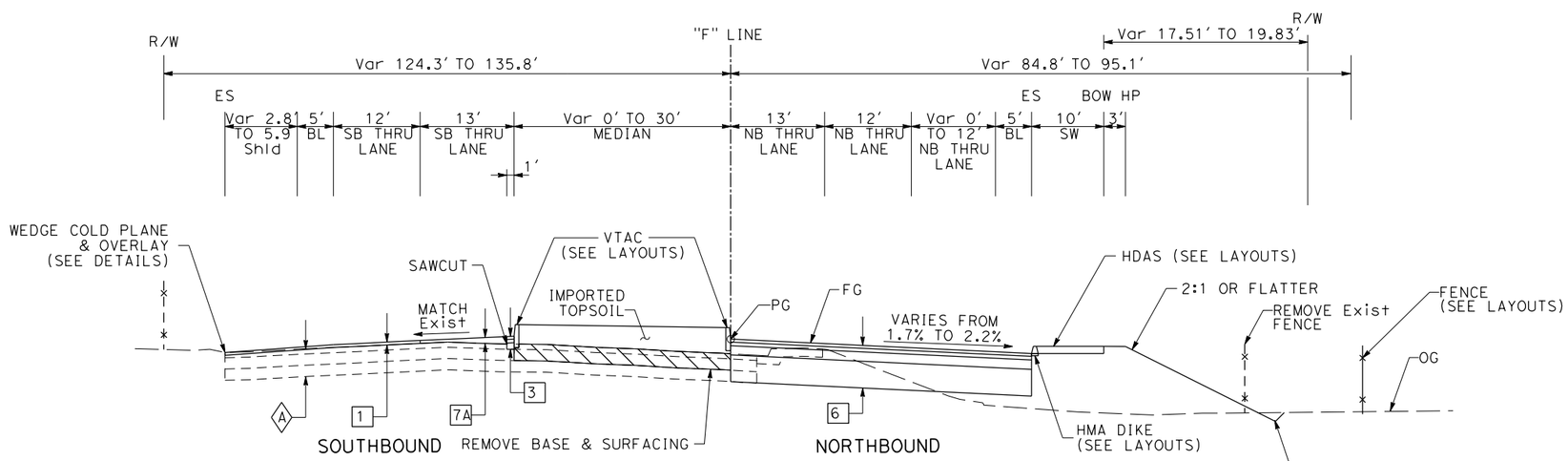

FAIRGROUNDS DRIVE

"F" 24+84.34 TO 26+26.40

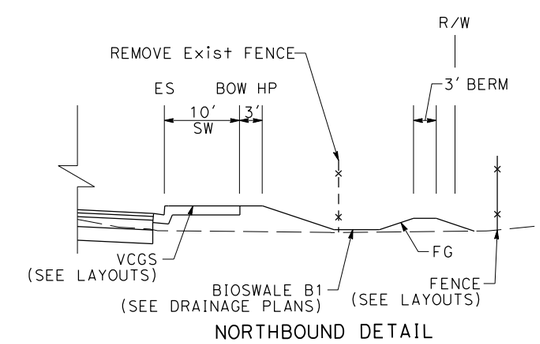

NORTHBOUND DETAIL

FAIRGROUNDS DRIVE

"F" 23+50 TO 25+80

FOR NOTES AND ABBREVIATIONS, SEE SHEET X-1

TYPICAL CROSS SECTIONS

NO SCALE

X-3

J.R.	02/15/22		
REVISED BY	DATE REVISED		
JESUS RICO	CARL GIBSON III		
CALCULATED-DESIGNED BY	CHECKED BY		
CARL GIBSON III			
CONSULTANT FUNCTIONAL SUPERVISOR			

STATE OF CALIFORNIA - DEPARTMENT OF TRANSPORTATION

Caltrans

X:\SR 37_FAIRGROUNDS DRIVE\000_CAD\Sheets\005-TypXSections\0418000069ca003.dgn

LAST REVISION 00-00-00 | DATE PLOTTED => 9/2/2022 | TIME PLOTTED => 9:53:55 AM

Dist	COUNTY	ROUTE	POST MILES TOTAL PROJECT	SHEET No.	TOTAL SHEETS
04	Sol	37	10.9		

REGISTERED CIVIL ENGINEER DATE

PLANS APPROVAL DATE

REGISTERED PROFESSIONAL ENGINEER No. Exp. CIVIL STATE OF CALIFORNIA

THE STATE OF CALIFORNIA OR ITS OFFICERS OR AGENTS SHALL NOT BE RESPONSIBLE FOR THE ACCURACY OR COMPLETENESS OF SCANNED COPIES OF THIS PLAN SHEET.

WMH CORPORATION
11070 WHITE ROCK RD
SUITE 140
RANCHO CORDOVA
CA 95670

SOLANO TRANSPORTATION AUTHORITY
1 HARBOR CENTER
SUITE 130
SUISUN CITY, CA 94585

PRELIMINARY PLANS SUBJECT TO REVISION

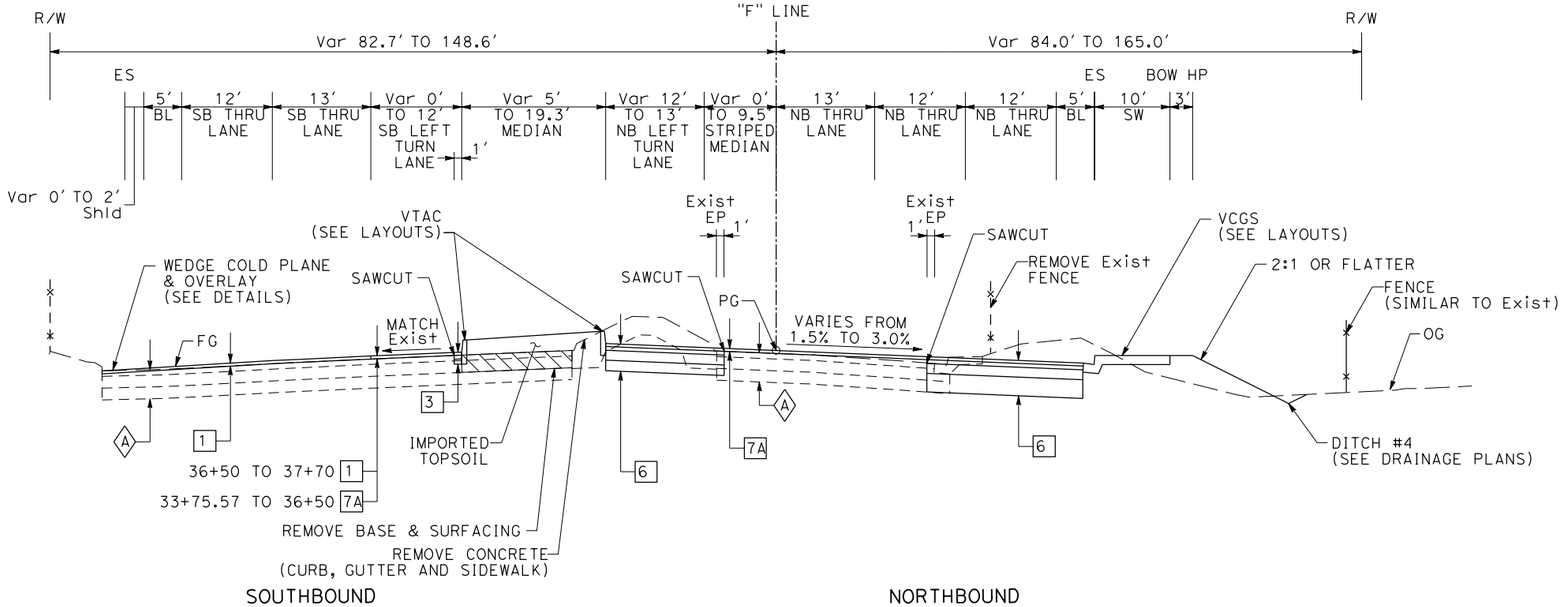

FAIRGROUNDS DRIVE

"F" 33+75.57 TO 37+70

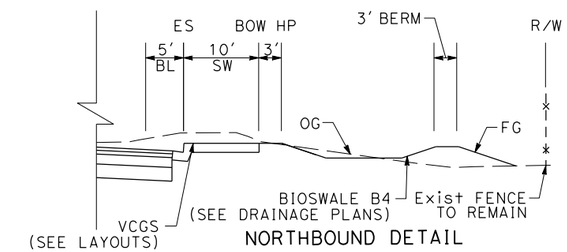

FAIRGROUNDS DRIVE

"F" 35+00 TO 36+50

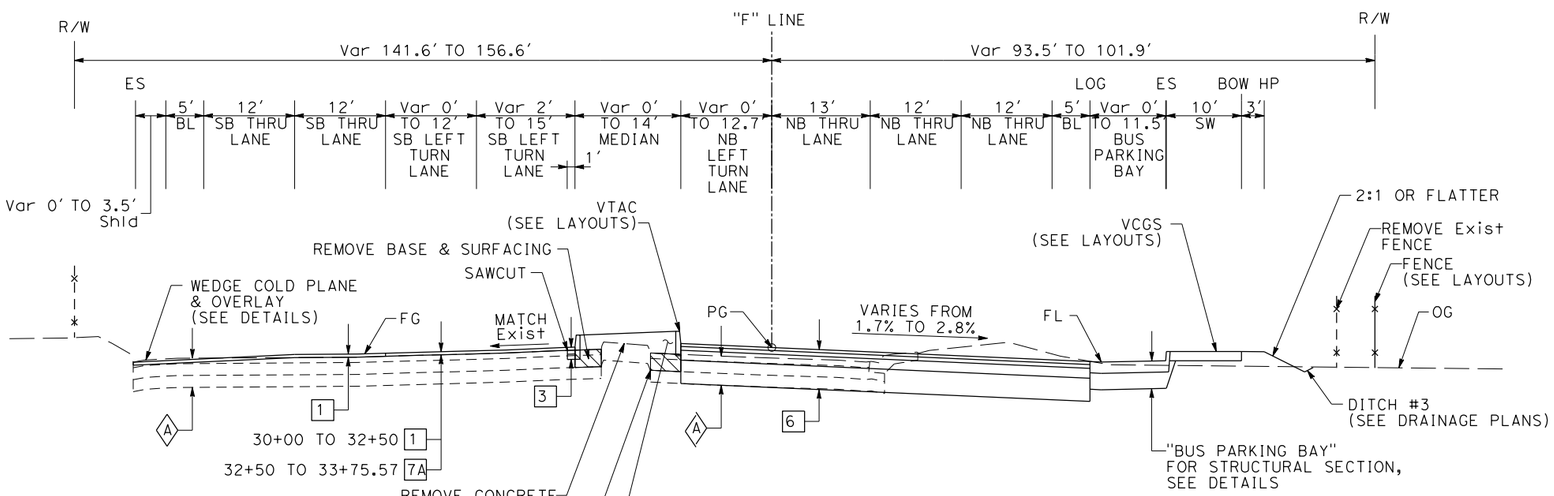

FAIRGROUNDS DRIVE

"F" 30+00 TO 33+75.57

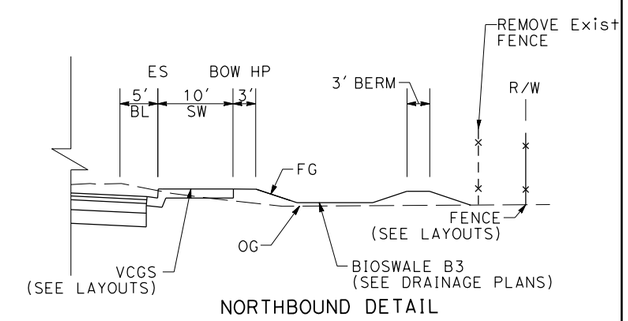

FAIRGROUNDS DRIVE

"F" 32+50 TO 33+50

FOR NOTES AND ABBREVIATIONS, SEE SHEET X-1

TYPICAL CROSS SECTIONS

NO SCALE

X-4

REVISED BY	DATE REVISED
J.R.	02/15/22

JESUS RICO — CARL GIBSON III

CALCULATED-DESIGNED BY — CHECKED BY

CONSULTANT FUNCTIONAL SUPERVISOR — CARL GIBSON III

STATE OF CALIFORNIA - DEPARTMENT OF TRANSPORTATION

Caltrans

X:\SR 37_FAIRGROUNDS DRIVE\000_CAD\Sheets\005-TypXSections\0418000069ca004.dgn

LAST REVISION 00-00-00 — DATE PLOTTED => 9/2/2022 — TIME PLOTTED => 9:53:58 AM

Dist	COUNTY	ROUTE	POST MILES TOTAL PROJECT	SHEET No.	TOTAL SHEETS
04	Sol	37	10.9		

REGISTERED CIVIL ENGINEER DATE

PLANS APPROVAL DATE

REGISTERED PROFESSIONAL ENGINEER No. Exp. CIVIL STATE OF CALIFORNIA

THE STATE OF CALIFORNIA OR ITS OFFICERS OR AGENTS SHALL NOT BE RESPONSIBLE FOR THE ACCURACY OR COMPLETENESS OF SCANNED COPIES OF THIS PLAN SHEET.

WMH CORPORATION
11070 WHITE ROCK RD
SUITE 140
RANCHO CORDOVA
CA 95670

SOLANO TRANSPORTATION AUTHORITY
1 HARBOR CENTER
SUITE 130
SUISUN CITY, CA 94585

PRELIMINARY PLANS SUBJECT TO REVISION

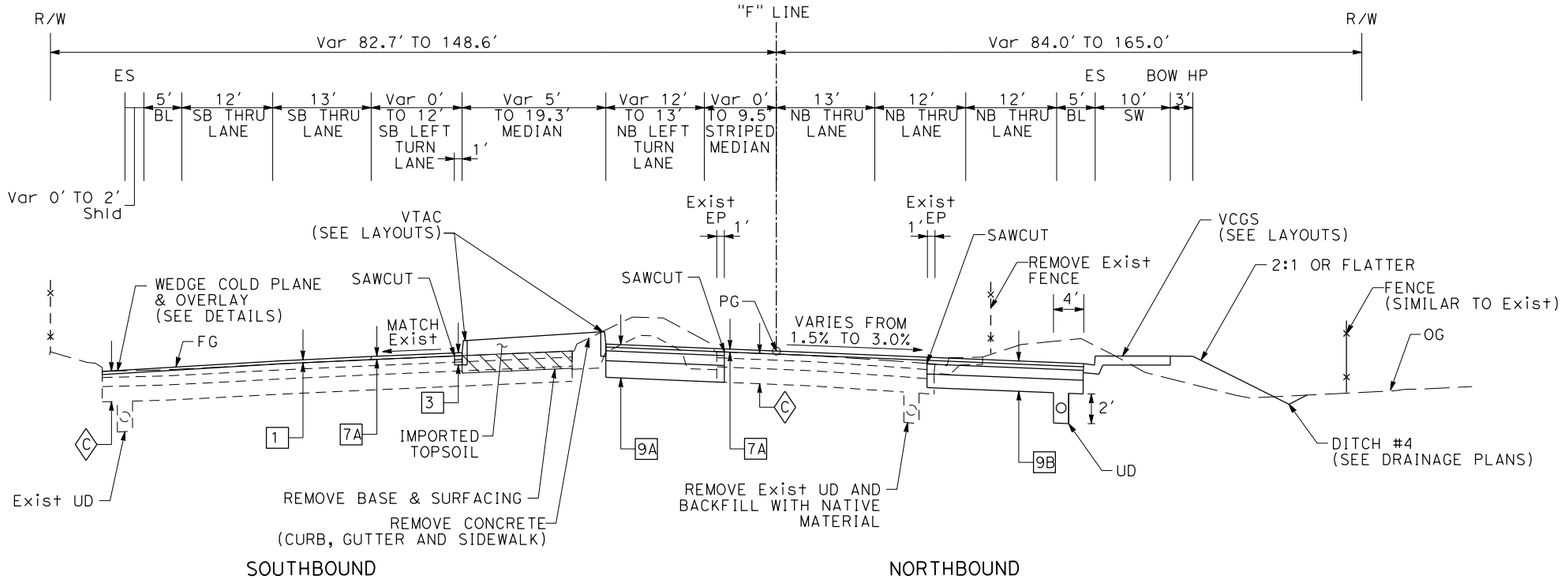

FAIRGROUNDS DRIVE

"F" 39+00 TO 39+50

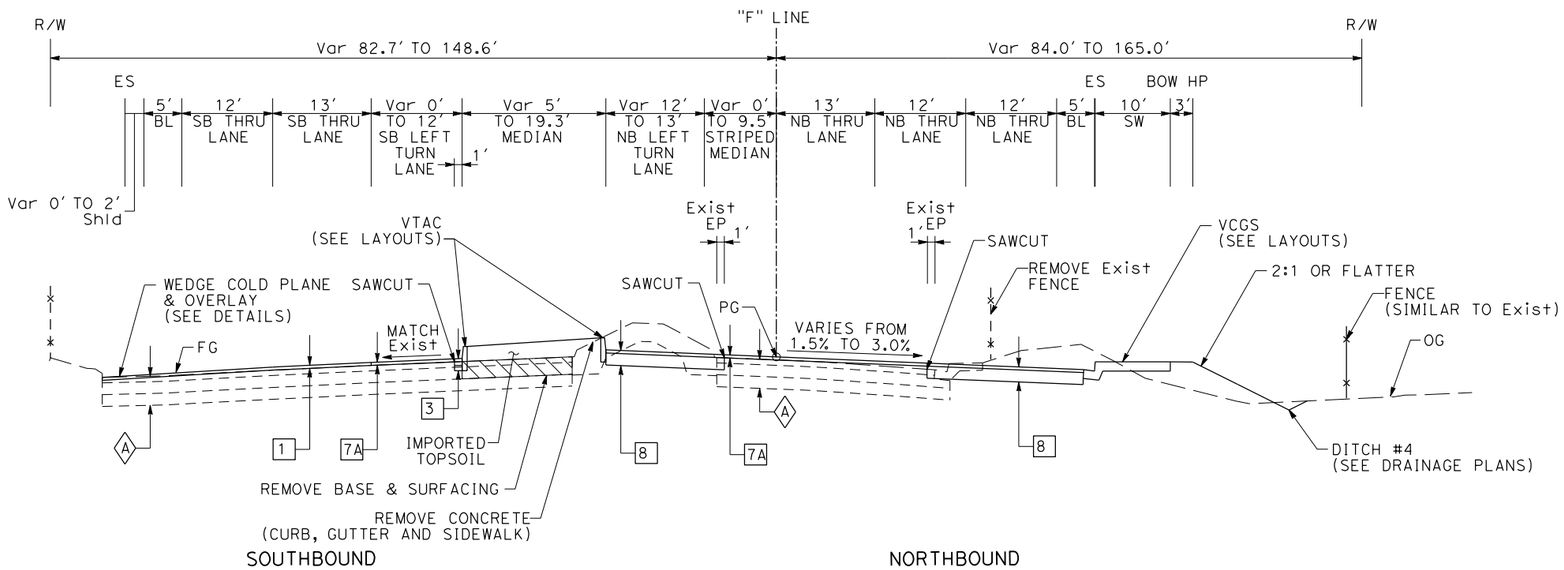

FAIRGROUNDS DRIVE

"F" 37+70 TO 39+00

FOR NOTES AND ABBREVIATIONS, SEE SHEET X-1

TYPICAL CROSS SECTIONS

NO SCALE

X-5

REVISED BY	DATE REVISED
J.V.	02/15/22

JAMEY VALDIVIA — CARL GIBSON III

CALCULATED-DESIGNED BY — CHECKED BY

CARL GIBSON III — CONSULTANT FUNCTIONAL SUPERVISOR

STATE OF CALIFORNIA - DEPARTMENT OF TRANSPORTATION — Caltrans

X:\SR 37_FAIRGROUNDS DRIVE\000_CAD\Sheets\005-TypXSections\0418000069ca005.dgn

LAST REVISION 00-00-00 — DATE PLOTTED => 9/2/2022 TIME PLOTTED => 9:54:01 AM

Dist	COUNTY	ROUTE	POST MILES TOTAL PROJECT	SHEET No.	TOTAL SHEETS
04	Sol	37	10.9		

REGISTERED CIVIL ENGINEER DATE

PLANS APPROVAL DATE

REGISTERED PROFESSIONAL ENGINEER No. Exp. CIVIL STATE OF CALIFORNIA

THE STATE OF CALIFORNIA OR ITS OFFICERS OR AGENTS SHALL NOT BE RESPONSIBLE FOR THE ACCURACY OR COMPLETENESS OF SCANNED COPIES OF THIS PLAN SHEET.

WMH CORPORATION
11070 WHITE ROCK RD
SUITE 140
RANCHO CORDOVA
CA 95670

SOLANO TRANSPORTATION AUTHORITY
1 HARBOR CENTER
SUITE 130
SUISUN CITY, CA 94585

PRELIMINARY PLANS SUBJECT TO REVISION

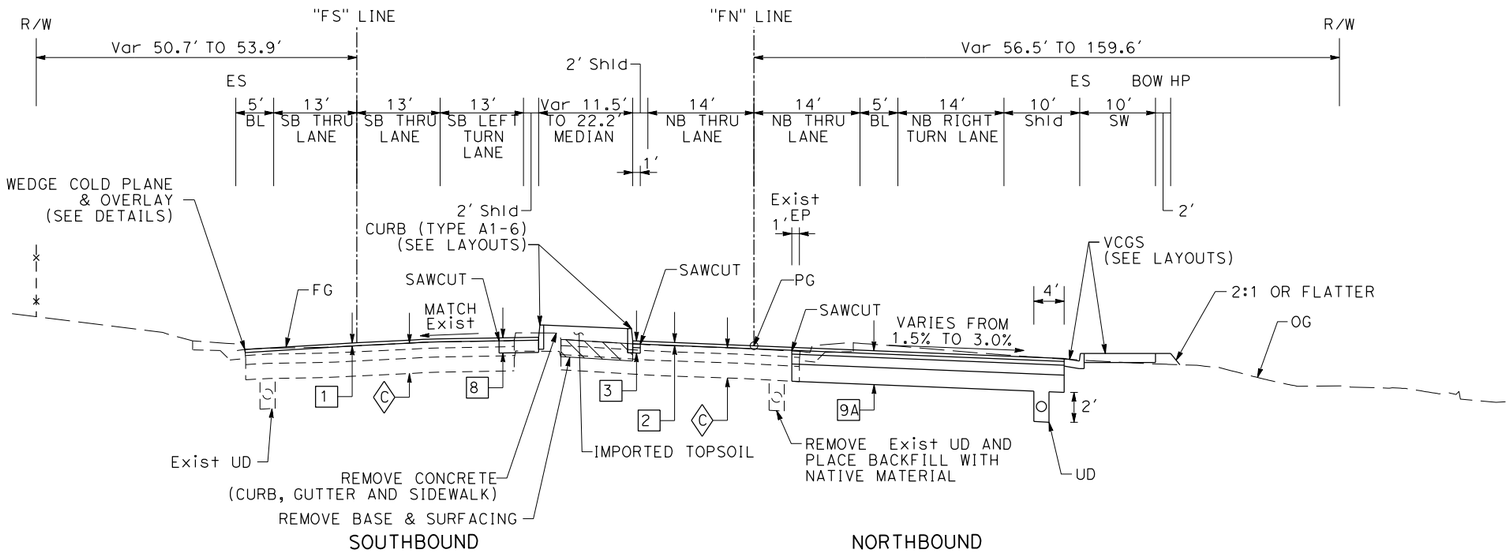

FAIRGROUNDS DRIVE

"FN" 60+00 TO 61+17.97
"FS" 75+00 TO 76+28.75

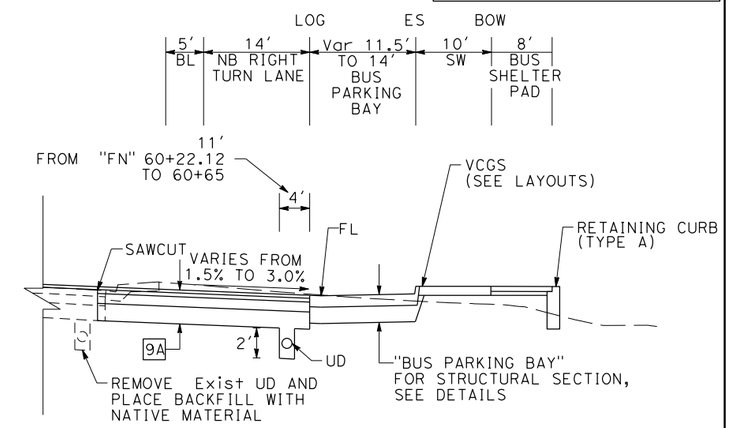

NORTHBOUND DETAIL

FAIRGROUNDS DRIVE

"F" 42+56.72 TO
"FN" 61+17.97

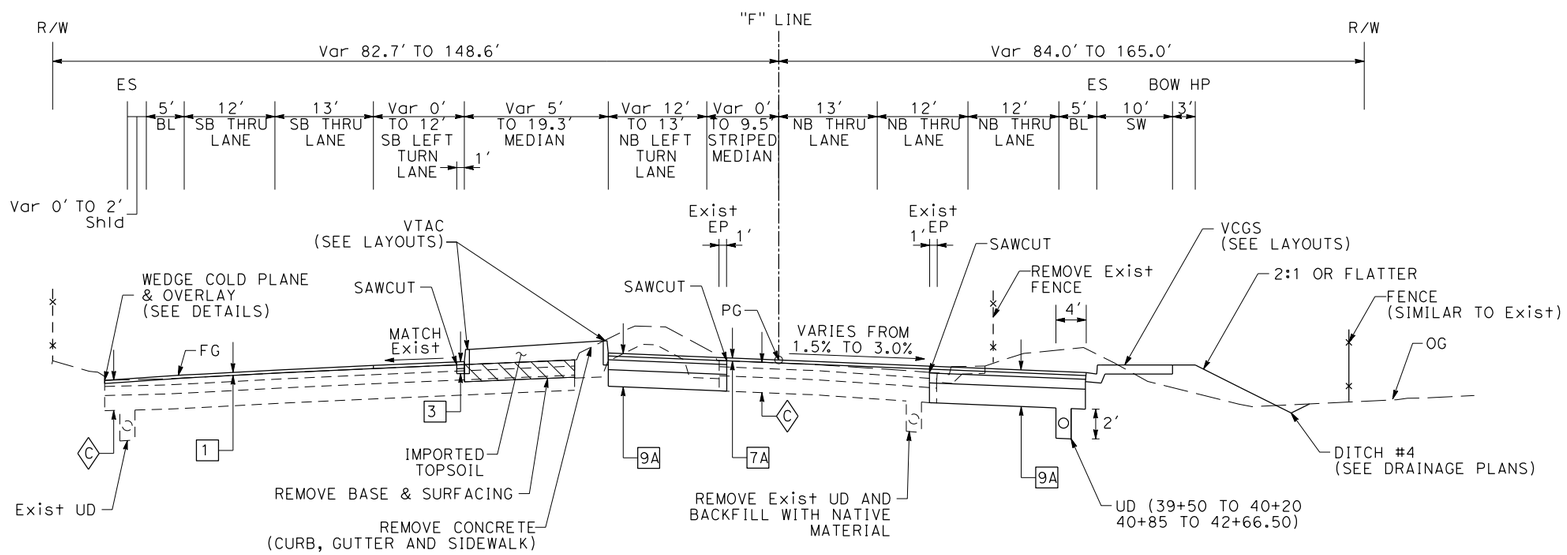

FAIRGROUNDS DRIVE

"F" 39+50 TO 42+66.50

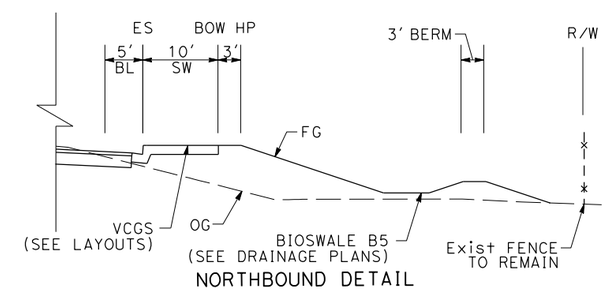

NORTHBOUND DETAIL

FAIRGROUNDS DRIVE

"F" 39+50 TO 41+00

FOR NOTES AND ABBREVIATIONS, SEE SHEET X-1

TYPICAL CROSS SECTIONS

NO SCALE

X-6

REVISED BY	DATE REVISED	J.V.	02/15/22
JAMEY VALDIVIA	CARL GIBSON III	CALCULATED-DESIGNED BY	CHECKED BY
CARL GIBSON III		CONSULTANT FUNCTIONAL SUPERVISOR	

STATE OF CALIFORNIA - DEPARTMENT OF TRANSPORTATION

X:\SR 37_FAIRGROUNDS DRIVE\000_CAD\Sheets\005-TypXSections\0418000069ca006.dgn

LAST REVISION 00-00-00 | DATE PLOTTED => 9/2/2022 | TIME PLOTTED => 9:54:04 AM

Dist	COUNTY	ROUTE	POST MILES TOTAL PROJECT	SHEET No.	TOTAL SHEETS
04	Sol	37	10.9		

REGISTERED CIVIL ENGINEER DATE

PLANS APPROVAL DATE

REGISTERED PROFESSIONAL ENGINEER No. Exp. CIVIL STATE OF CALIFORNIA

THE STATE OF CALIFORNIA OR ITS OFFICERS OR AGENTS SHALL NOT BE RESPONSIBLE FOR THE ACCURACY OR COMPLETENESS OF SCANNED COPIES OF THIS PLAN SHEET.

WMH CORPORATION
11070 WHITE ROCK RD
SUITE 140
RANCHO CORDOVA
CA 95670

SOLANO TRANSPORTATION AUTHORITY
1 HARBOR CENTER
SUITE 130
SUISUN CITY, CA 94585

PRELIMINARY PLANS SUBJECT TO REVISION

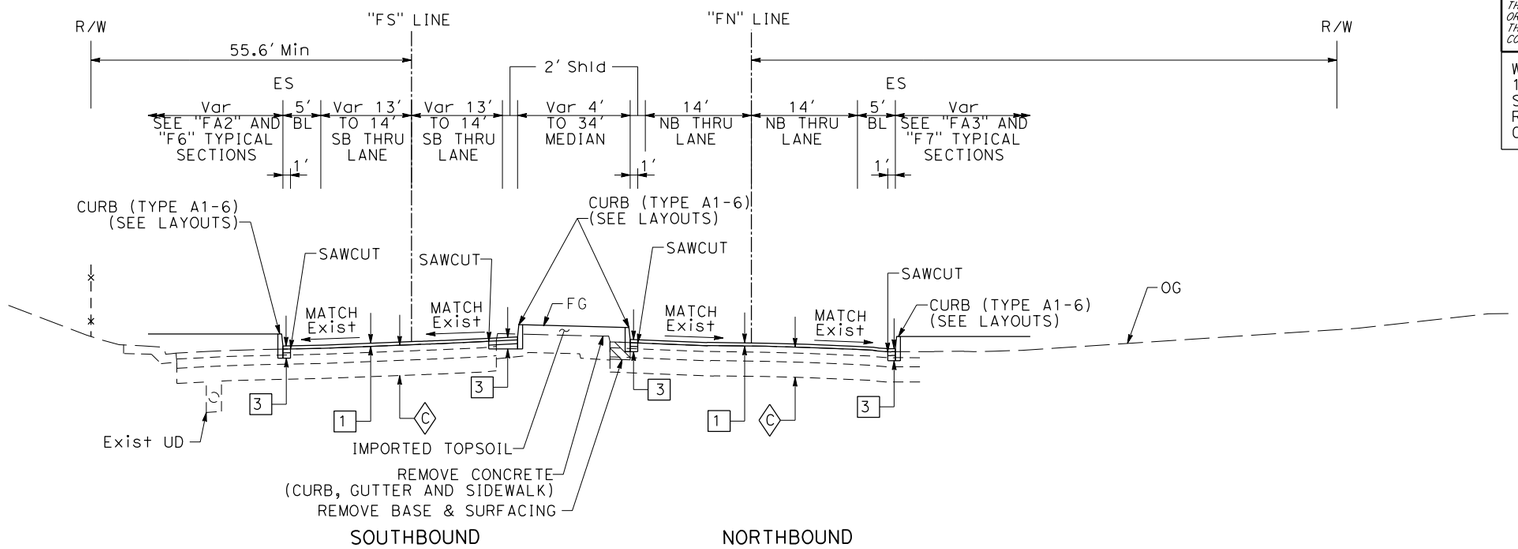

FAIRGROUNDS DRIVE

"FN" 62+04.66 TO 64+25.36
"FS" 76+92.39 TO 78+86.22

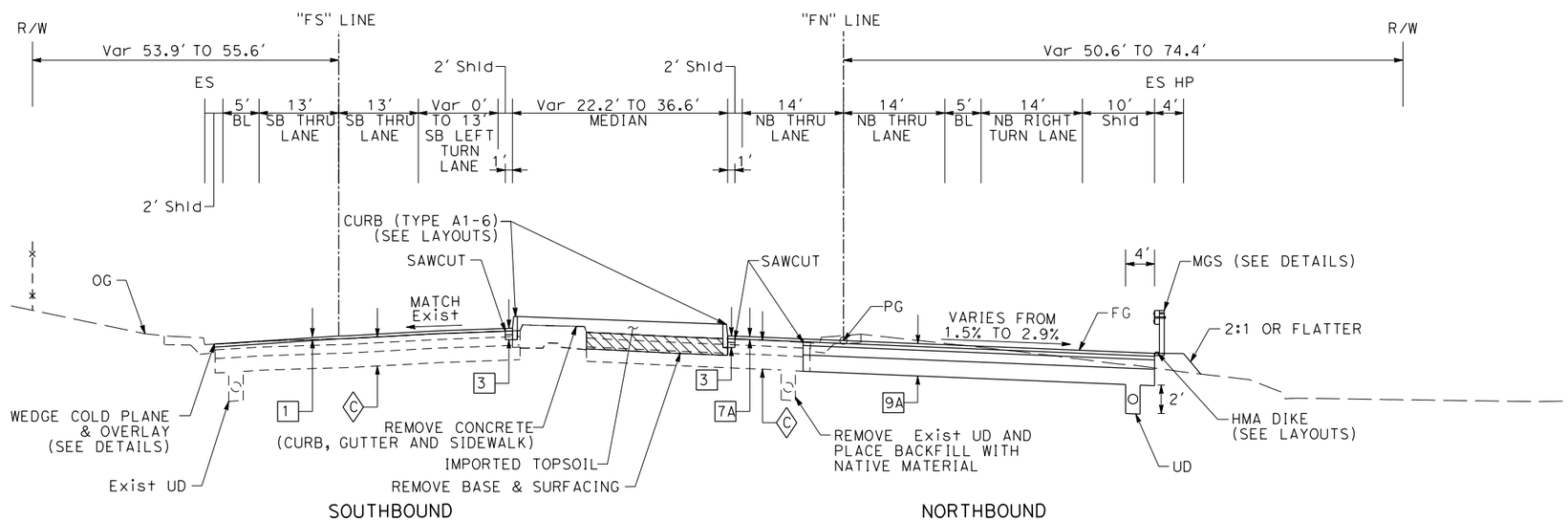

FAIRGROUNDS DRIVE

"FN" 61+17.97 TO 62+04.66
"FS" 76+28.75 TO 76+92.39

FOR NOTES AND ABBREVIATIONS, SEE SHEET X-1

TYPICAL CROSS SECTIONS

NO SCALE

X-7

JAMEY VALDIVIA	CARL GIBSON III	J.V.	02/15/22	
CALCULATED-DESIGNED BY	CHECKED BY	REVISED BY	DATE REVISED	

CONSULTANT FUNCTIONAL SUPERVISOR: CARL GIBSON III

STATE OF CALIFORNIA - DEPARTMENT OF TRANSPORTATION

Caltrans

X:\SR 37_FAIRGROUNDS DRIVE\000_CAD\Sheets\005-TypXSections\0418000069ca007.dgn

LAST REVISION 00-00-00 | DATE PLOTTED => 9/2/2022 | TIME PLOTTED => 9:54:08 AM

BORDER LAST REVISED 7/2/2010 | USERNAME => jvaldivia | DGN FILE => 0418000069ca007.dgn | RELATIVE BORDER SCALE IS IN INCHES 0 1 2 3 | UNIT 0738 | PROJECT NUMBER & PHASE 04000205841

Dist	COUNTY	ROUTE	POST MILES TOTAL PROJECT	SHEET No.	TOTAL SHEETS
04	Sol	37	10.9		

REGISTERED CIVIL ENGINEER DATE

PLANS APPROVAL DATE

REGISTERED PROFESSIONAL ENGINEER No. Exp. CIVIL STATE OF CALIFORNIA

THE STATE OF CALIFORNIA OR ITS OFFICERS OR AGENTS SHALL NOT BE RESPONSIBLE FOR THE ACCURACY OR COMPLETENESS OF SCANNED COPIES OF THIS PLAN SHEET.

WMH CORPORATION
11070 WHITE ROCK RD
SUITE 140
RANCHO CORDOVA
CA 95670

SOLANO TRANSPORTATION AUTHORITY
1 HARBOR CENTER
SUITE 130
SUISUN CITY, CA 94585

PRELIMINARY PLANS SUBJECT TO REVISION

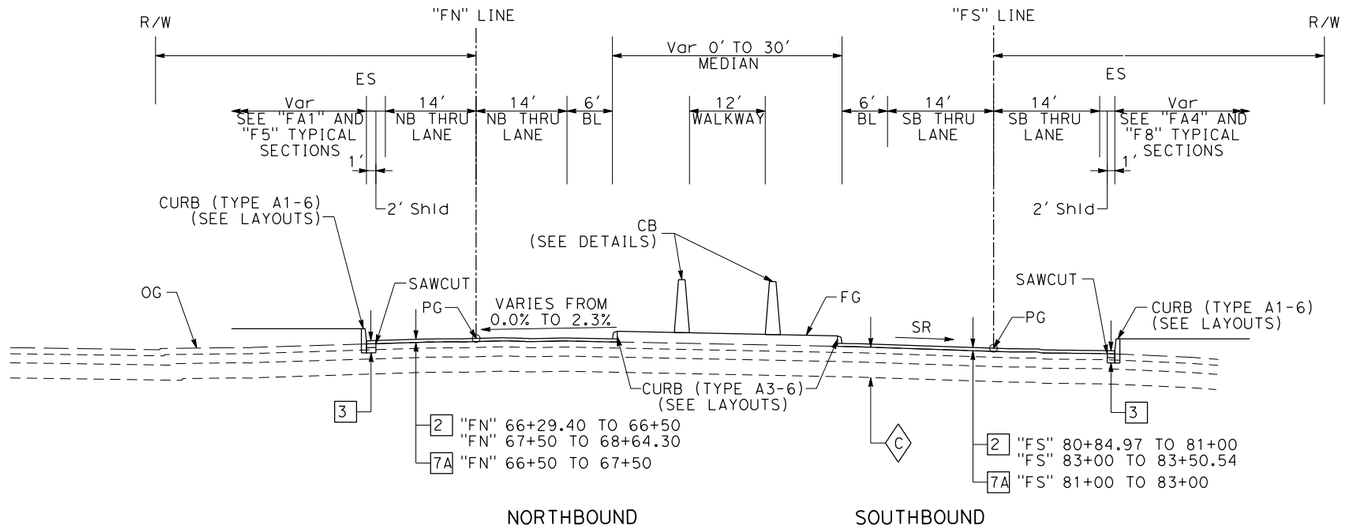

FAIRGROUNDS DRIVE

"FN" 66+29.40 TO 68+64.30
"FS" 80+84.97 TO 83+50.54

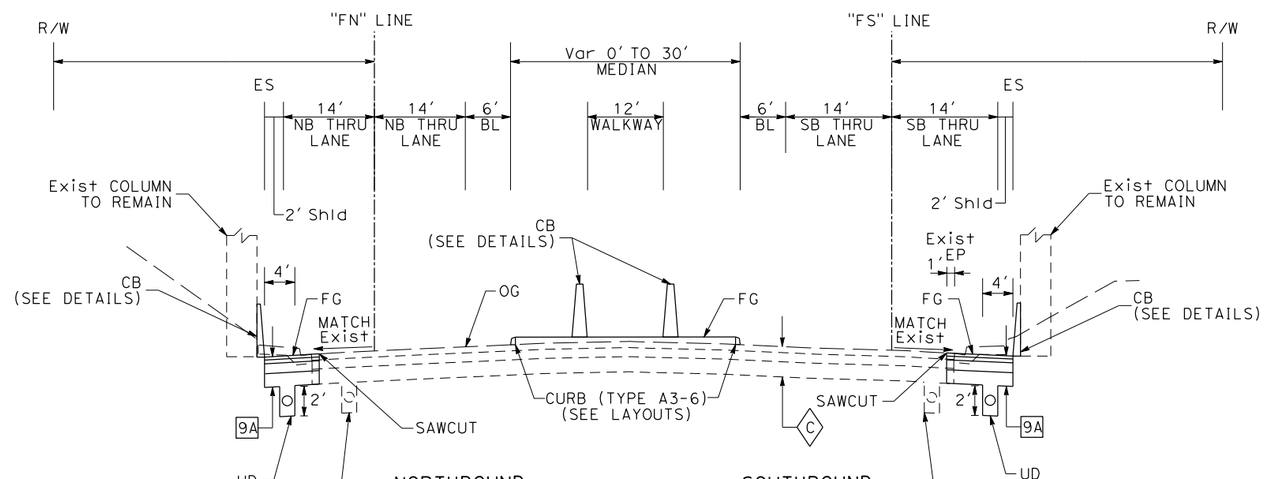

FAIRGROUNDS DRIVE

"FN" 64+25.36 TO 66+29.40
"FS" 78+86.22 TO 80+84.97

FOR NOTES AND ABBREVIATIONS, SEE SHEET X-1

TYPICAL CROSS SECTIONS

NO SCALE

X-8

REVISED BY	DATE REVISED
J.V.	02/15/22

JAMEY VALDIVIA	CARL GIBSON III	CARL GIBSON III
CALCULATED-DESIGNED BY	CHECKED BY	CONSULTANT FUNCTIONAL SUPERVISOR

STATE OF CALIFORNIA - DEPARTMENT OF TRANSPORTATION

Caltrans

X:\SR 37_FAIRGROUNDS DRIVE\000_CAD\Sheets\005-TypXSections\0418000069ca008.dgn

LAST REVISION 00-00-00 | DATE PLOTTED => 9/2/2022 TIME PLOTTED => 9:54:14 AM

BORDER LAST REVISED 7/2/2010 | USERNAME => jvaldivia DGN FILE => 0418000069ca008.dgn | RELATIVE BORDER SCALE IS IN INCHES 0 1 2 3 | UNIT 0738 | PROJECT NUMBER & PHASE 04000205841

Dist	COUNTY	ROUTE	POST MILES TOTAL PROJECT	SHEET No.	TOTAL SHEETS
04	Sol	37	10.9		

REGISTERED CIVIL ENGINEER DATE

PLANS APPROVAL DATE

REGISTERED PROFESSIONAL ENGINEER No. Exp. CIVIL STATE OF CALIFORNIA

THE STATE OF CALIFORNIA OR ITS OFFICERS OR AGENTS SHALL NOT BE RESPONSIBLE FOR THE ACCURACY OR COMPLETENESS OF SCANNED COPIES OF THIS PLAN SHEET.

WMH CORPORATION
11070 WHITE ROCK RD
SUITE 140
RANCHO CORDOVA
CA 95670

SOLANO TRANSPORTATION AUTHORITY
1 HARBOR CENTER
SUITE 130
SUISUN CITY, CA 94585

PRELIMINARY PLANS SUBJECT TO REVISION

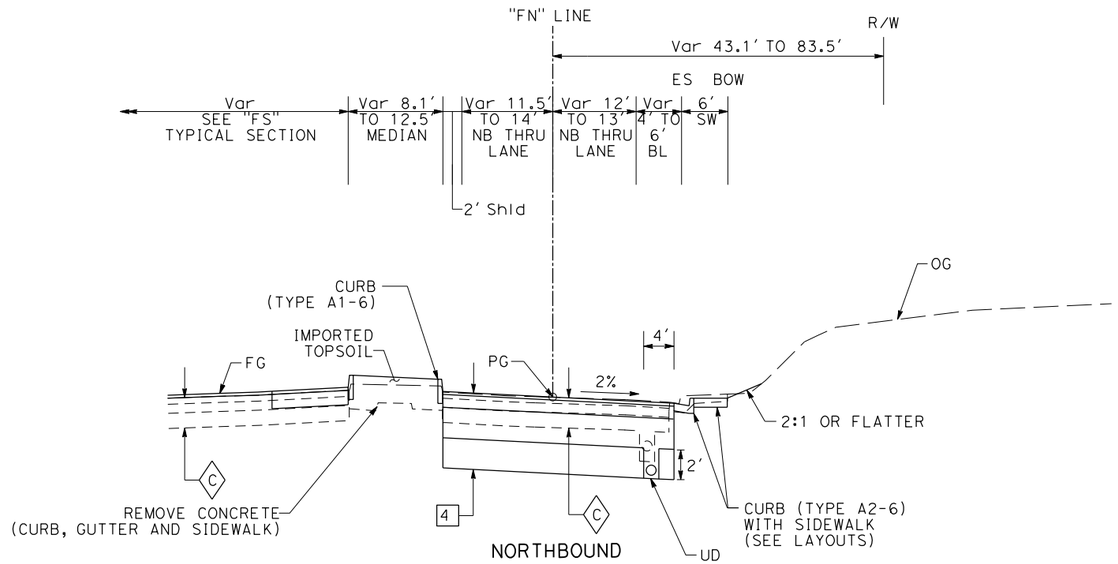

FAIRGROUNDS DRIVE

"FN" 72+00 TO 73+32

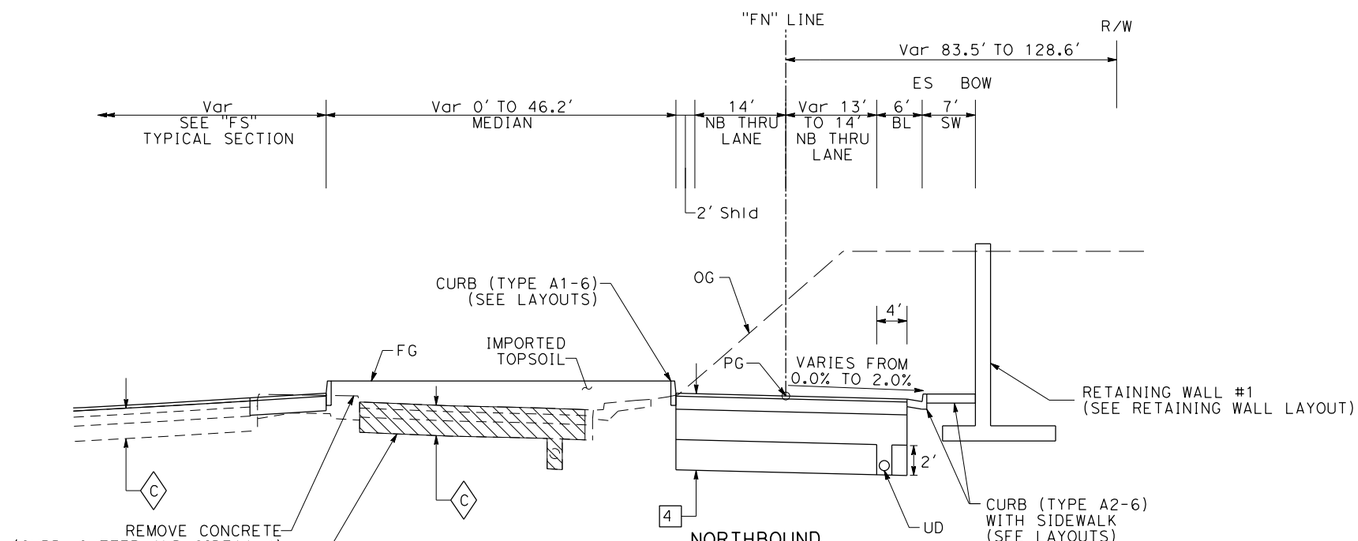

FOR NOTES AND ABBREVIATIONS, SEE SHEET X-1

FAIRGROUNDS DRIVE

"FN" 68+64.30 TO 72+00

TYPICAL CROSS SECTIONS

NO SCALE

X-9

REVISED BY	DATE REVISED
J.V.	02/15/22

JAMEY VALDIVIA — CARL GIBSON III

CALCULATED-DESIGNED BY — CHECKED BY

CONSULTANT FUNCTIONAL SUPERVISOR — CARL GIBSON III

STATE OF CALIFORNIA - DEPARTMENT OF TRANSPORTATION — Caltrans

X:\SR 37_FAIRGROUNDS DRIVE\000_CAD\Sheets\005-TypXSections\0418000069ca009.dgn

LAST REVISION 00-00-00 — DATE PLOTTED => 9/2/2022 TIME PLOTTED => 9:54:18 AM

Dist	COUNTY	ROUTE	POST MILES TOTAL PROJECT	SHEET No.	TOTAL SHEETS
04	Sol	37	10.9		

REGISTERED CIVIL ENGINEER DATE

PLANS APPROVAL DATE

REGISTERED PROFESSIONAL ENGINEER No. Exp. CIVIL STATE OF CALIFORNIA

THE STATE OF CALIFORNIA OR ITS OFFICERS OR AGENTS SHALL NOT BE RESPONSIBLE FOR THE ACCURACY OR COMPLETENESS OF SCANNED COPIES OF THIS PLAN SHEET.

WMH CORPORATION
11070 WHITE ROCK RD
SUITE 140
RANCHO CORDOVA
CA 95670

SOLANO TRANSPORTATION AUTHORITY
1 HARBOR CENTER
SUITE 130
SUISUN CITY, CA 94585

PRELIMINARY PLANS SUBJECT TO REVISION

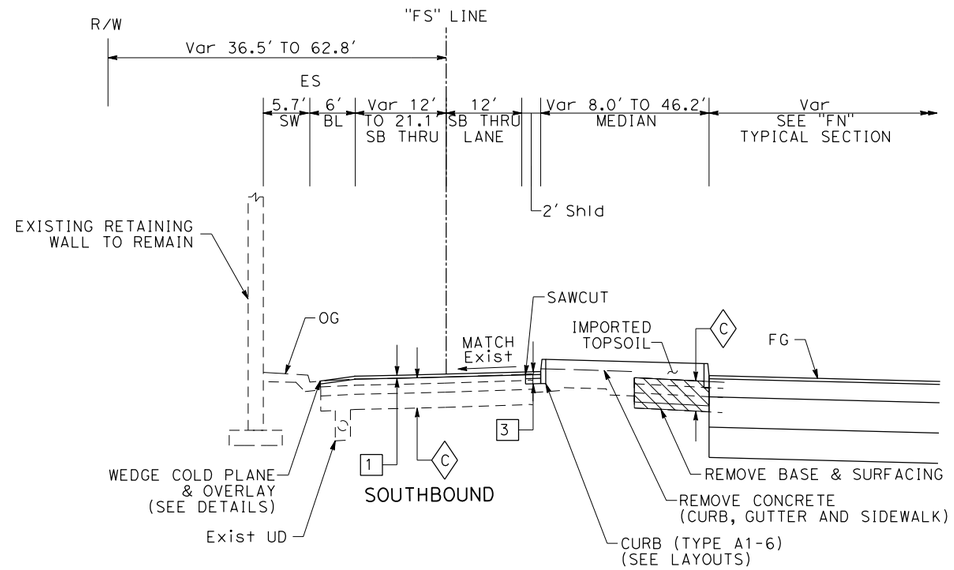

FAIRGROUNDS DRIVE

"FS" 84+50 TO 88+16.55

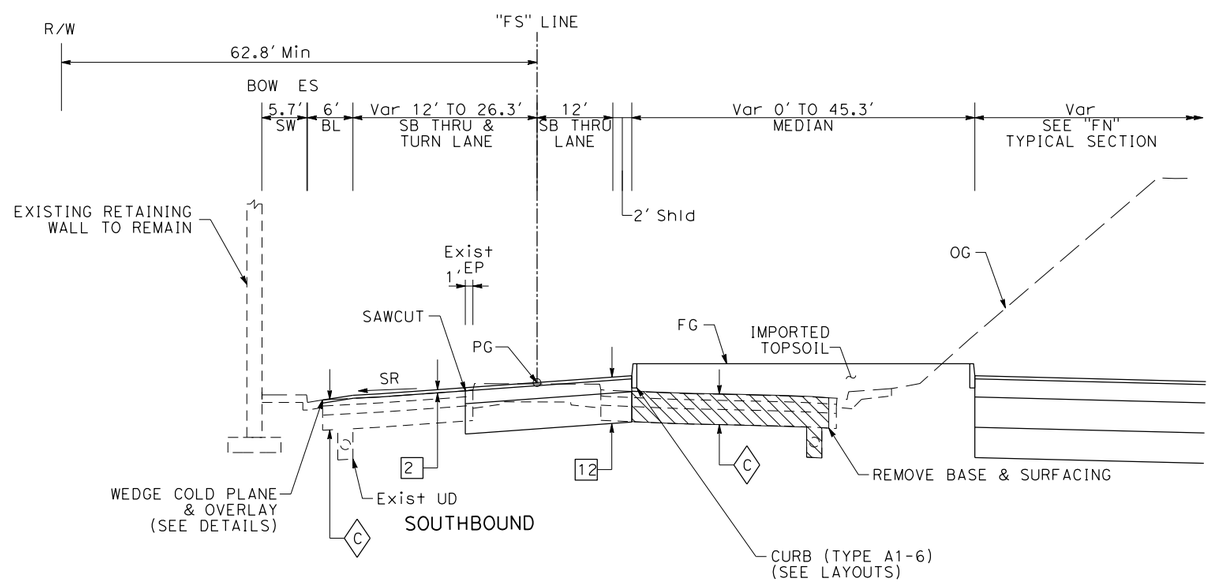

FAIRGROUNDS DRIVE

"FS" 83+50.54 TO 84+50

FOR NOTES AND ABBREVIATIONS, SEE SHEET X-1

TYPICAL CROSS SECTIONS

NO SCALE

X-10

REVISED BY	DATE REVISED
J.V.	02/15/22

JAMEY VALDIVIA	CARL GIBSON III
CALCULATED-DESIGNED BY	CHECKED BY

CARL GIBSON III — CONSULTANT FUNCTIONAL SUPERVISOR

STATE OF CALIFORNIA - DEPARTMENT OF TRANSPORTATION — Caltrans

X:\SR 37_FAIRGROUNDS DRIVE\000_CAD\Sheets\005-TypXSections\0418000069ca010.dgn

LAST REVISION 00-00-00 | DATE PLOTTED => 9/2/2022 TIME PLOTTED => 9:54:23 AM

Dist	COUNTY	ROUTE	POST MILES TOTAL PROJECT	SHEET No.	TOTAL SHEETS
04	Sol	37	10.9		

REGISTERED CIVIL ENGINEER DATE

PLANS APPROVAL DATE

REGISTERED PROFESSIONAL ENGINEER No. Exp. CIVIL STATE OF CALIFORNIA

THE STATE OF CALIFORNIA OR ITS OFFICERS OR AGENTS SHALL NOT BE RESPONSIBLE FOR THE ACCURACY OR COMPLETENESS OF SCANNED COPIES OF THIS PLAN SHEET.

WMH CORPORATION
11070 WHITE ROCK RD
SUITE 140
RANCHO CORDOVA
CA 95670

SOLANO TRANSPORTATION AUTHORITY
1 HARBOR CENTER
SUITE 130
SUISUN CITY, CA 94585

PRELIMINARY PLANS SUBJECT TO REVISION

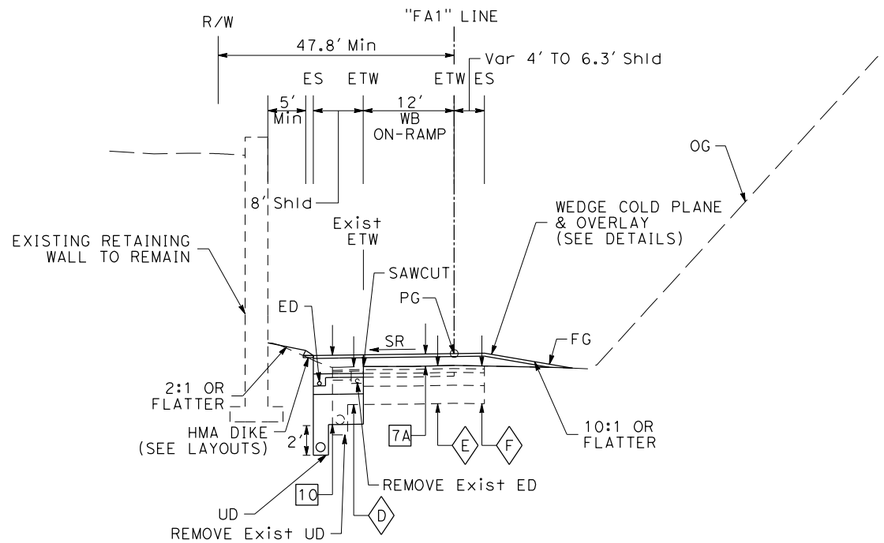

WB ROUTE 37 ON-RAMP

"FA1" 172+07.09 TO 172+72

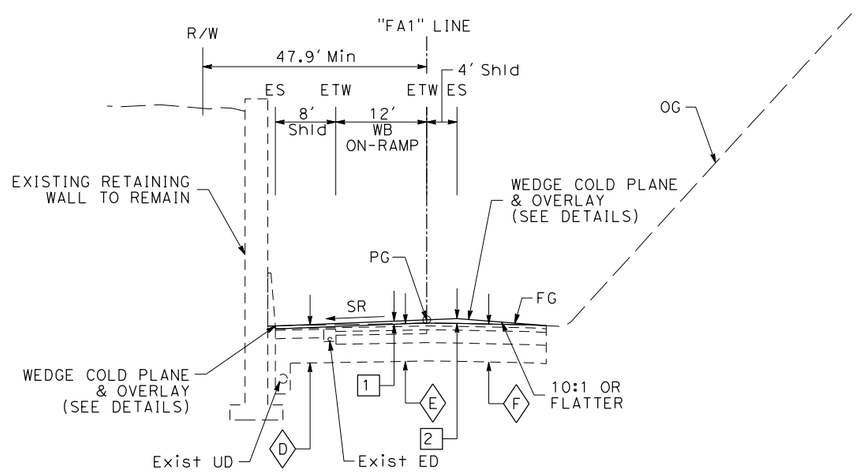

WB ROUTE 37 ON-RAMP

"FA1" 171+00 TO 172+07.09

FOR NOTES AND ABBREVIATIONS, SEE SHEET X-1

TYPICAL CROSS SECTIONS

NO SCALE

X-11

REVISED BY	DATE REVISED
J.V.	02/15/22

JAMEY VALDIVIA	CARL GIBSON III	CARL GIBSON III
CALCULATED-DESIGNED BY	CHECKED BY	CONSULTANT FUNCTIONAL SUPERVISOR

STATE OF CALIFORNIA - DEPARTMENT OF TRANSPORTATION

Caltrans

X:\SR 37_FAIRGROUNDS DRIVE\000_CAD\Sheets\005-TypXSections\0418000069ca011.dgn

LAST REVISION 00-00-00 | DATE PLOTTED => 9/2/2022 TIME PLOTTED => 9:54:27 AM

BORDER LAST REVISED 7/2/2010 | USERNAME => jvaldivia DGN FILE => 0418000069ca011.dgn | RELATIVE BORDER SCALE IS IN INCHES 0 1 2 3 | UNIT 0738 | PROJECT NUMBER & PHASE 04000205841

Dist	COUNTY	ROUTE	POST MILES TOTAL PROJECT	SHEET No.	TOTAL SHEETS
04	Sol	37	10.9		

REGISTERED CIVIL ENGINEER DATE

PLANS APPROVAL DATE

REGISTERED PROFESSIONAL ENGINEER No. Exp. CIVIL STATE OF CALIFORNIA

THE STATE OF CALIFORNIA OR ITS OFFICERS OR AGENTS SHALL NOT BE RESPONSIBLE FOR THE ACCURACY OR COMPLETENESS OF SCANNED COPIES OF THIS PLAN SHEET.

WMH CORPORATION
11070 WHITE ROCK RD
SUITE 140
RANCHO CORDOVA
CA 95670

SOLANO TRANSPORTATION AUTHORITY
1 HARBOR CENTER
SUITE 130
SUISUN CITY, CA 94585

PRELIMINARY PLANS SUBJECT TO REVISION

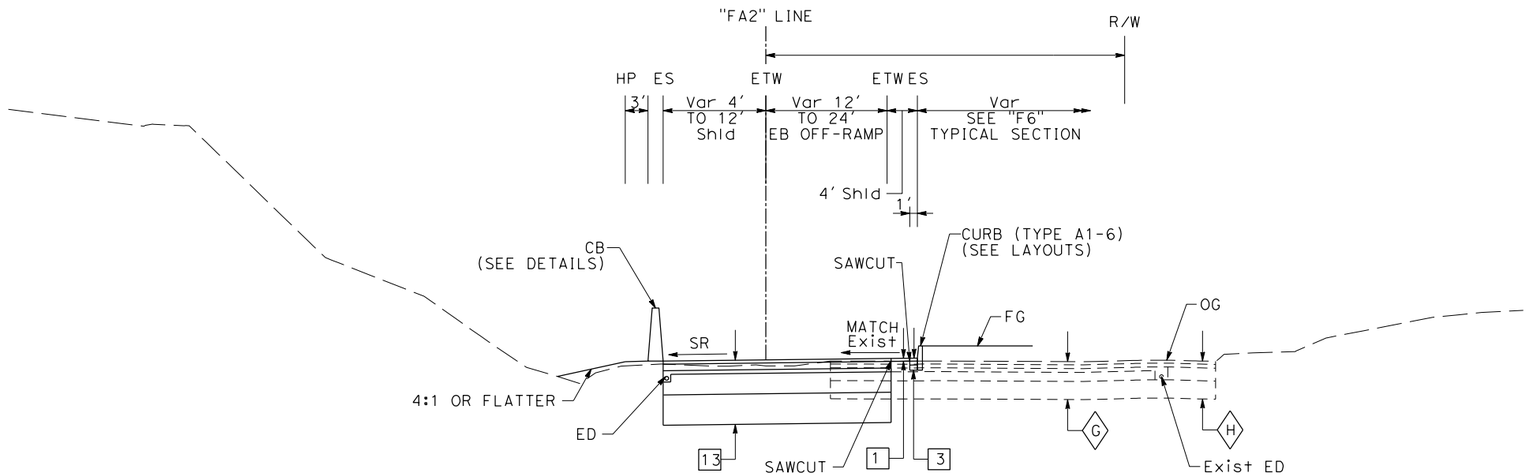

EB ROUTE 37 OFF-RAMP

"FA2" 275+62.98 TO 276+90.95

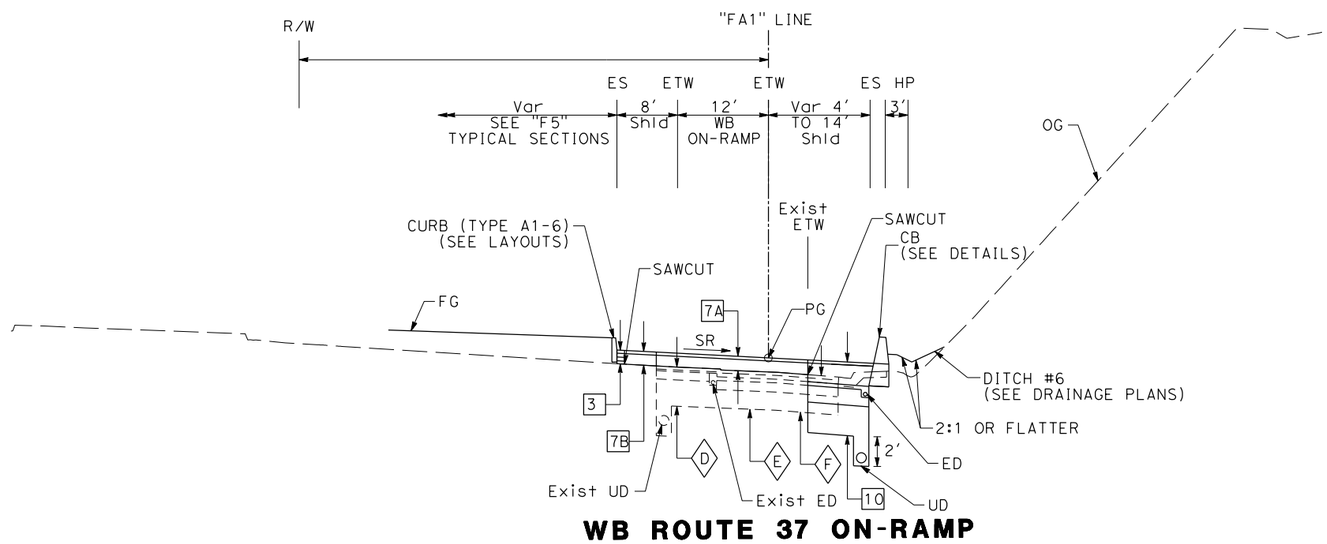

WB ROUTE 37 ON-RAMP

"FA1" 172+72 TO 173+88.82

FOR NOTES AND ABBREVIATIONS, SEE SHEET X-1

TYPICAL CROSS SECTIONS

NO SCALE

X-12

JAMEY VALDIVIA	CARL GIBSON III	REVISED BY	J.V.
CALCULATED-DESIGNED BY	CHECKED BY	DATE REVISED	02/15/22
CONSULTANT FUNCTIONAL SUPERVISOR	CARL GIBSON III		

STATE OF CALIFORNIA - DEPARTMENT OF TRANSPORTATION

Caltrans

X:\SR 37_FAIRGROUNDS DRIVE\000_CAD\Sheets\005-TypXSections\0418000069ca012.dgn

LAST REVISION 00-00-00 | DATE PLOTTED => 9/2/2022 | TIME PLOTTED => 9:54:31 AM

Dist	COUNTY	ROUTE	POST MILES TOTAL PROJECT	SHEET No.	TOTAL SHEETS
04	Sol	37	10.9		

REGISTERED CIVIL ENGINEER DATE

PLANS APPROVAL DATE

REGISTERED PROFESSIONAL ENGINEER No. Exp. CIVIL STATE OF CALIFORNIA

THE STATE OF CALIFORNIA OR ITS OFFICERS OR AGENTS SHALL NOT BE RESPONSIBLE FOR THE ACCURACY OR COMPLETENESS OF SCANNED COPIES OF THIS PLAN SHEET.

WMH CORPORATION
11070 WHITE ROCK RD
SUITE 140
RANCHO CORDOVA
CA 95670

SOLANO TRANSPORTATION AUTHORITY
1 HARBOR CENTER
SUITE 130
SUISUN CITY, CA 94585

PRELIMINARY PLANS SUBJECT TO REVISION

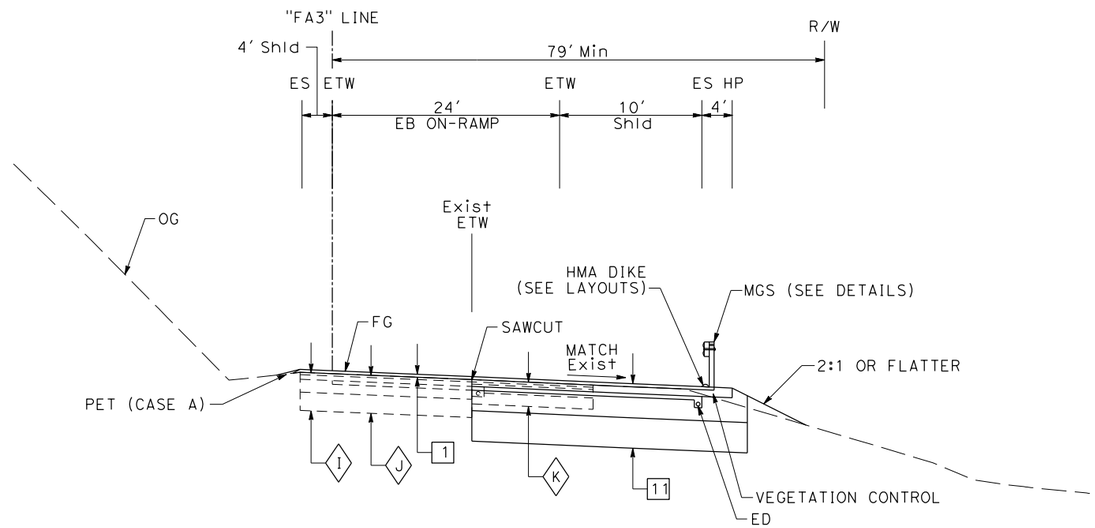

EB ROUTE 37 ON-RAMP

"FA3" 178+31.68 TO 180+10.23

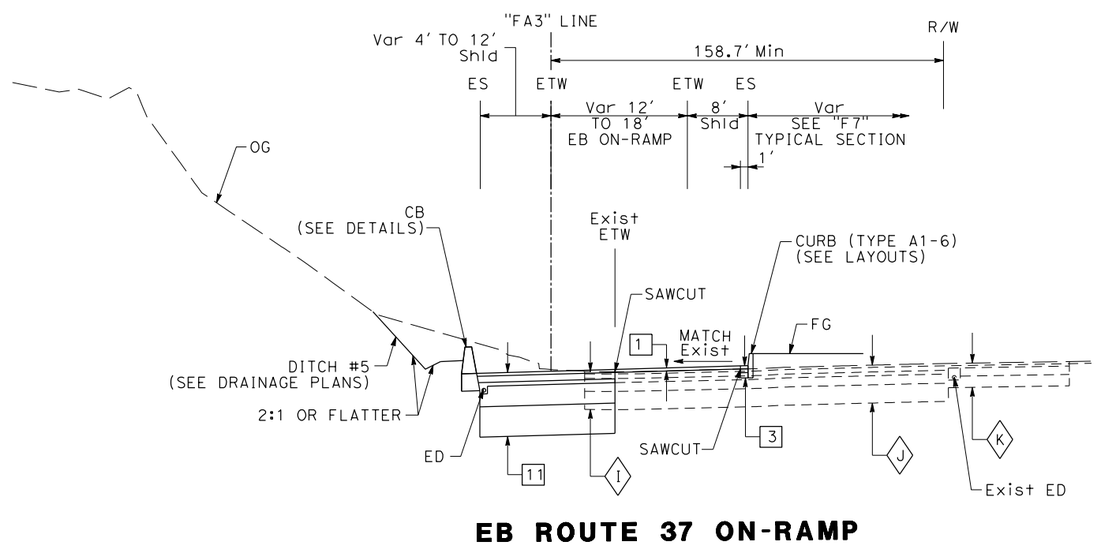

EB ROUTE 37 ON-RAMP

"FA3" 177+00 TO 178+31.68

FOR NOTES AND ABBREVIATIONS, SEE SHEET X-1

TYPICAL CROSS SECTIONS

NO SCALE

X-13

REVISED BY	DATE REVISED
J.V.	02/15/22

JAMEY VALDIVIA — CARL GIBSON III

CALCULATED-DESIGNED BY — CHECKED BY

CONSULTANT FUNCTIONAL SUPERVISOR — CARL GIBSON III

STATE OF CALIFORNIA - DEPARTMENT OF TRANSPORTATION — Caltrans

X:\SR 37_FAIRGROUNDS DRIVE\000_CAD\Sheets\005-TypXSections\0418000069ca013.dgn

LAST REVISION 00-00-00 — DATE PLOTTED => 9/2/2022 TIME PLOTTED => 9:54:34 AM

Dist	COUNTY	ROUTE	POST MILES TOTAL PROJECT	SHEET No.	TOTAL SHEETS
04	Sol	37	10.9		

REGISTERED CIVIL ENGINEER DATE

PLANS APPROVAL DATE

REGISTERED PROFESSIONAL ENGINEER No. Exp. CIVIL STATE OF CALIFORNIA

THE STATE OF CALIFORNIA OR ITS OFFICERS OR AGENTS SHALL NOT BE RESPONSIBLE FOR THE ACCURACY OR COMPLETENESS OF SCANNED COPIES OF THIS PLAN SHEET.

WMH CORPORATION
11070 WHITE ROCK RD
SUITE 140
RANCHO CORDOVA
CA 95670

SOLANO TRANSPORTATION AUTHORITY
1 HARBOR CENTER
SUITE 130
SUISUN CITY, CA 94585

PRELIMINARY PLANS SUBJECT TO REVISION

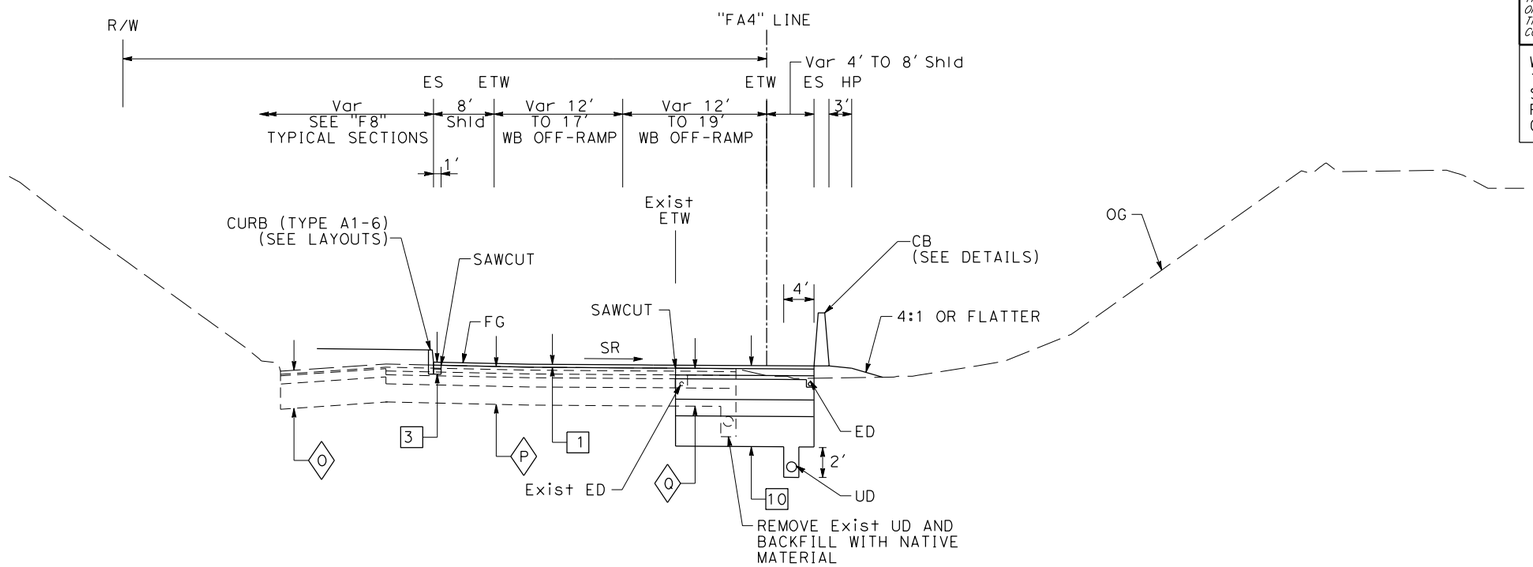

WB ROUTE 37 OFF-RAMP

"FA4" 275+00 TO 276+17.71

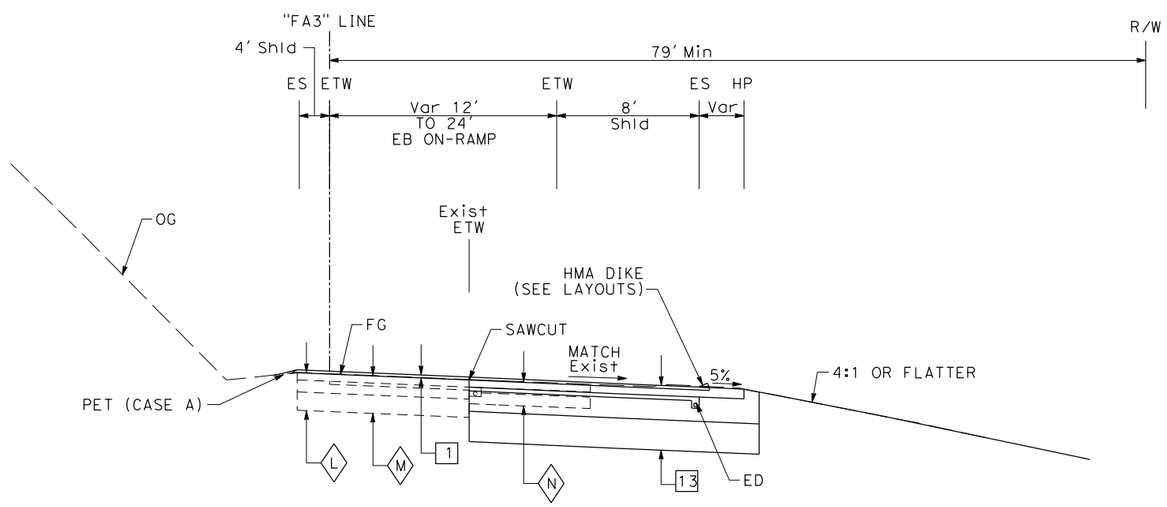

EB ROUTE 37 ON-RAMP

"FA3" 180+10.23 TO 183+70.23

FOR NOTES AND ABBREVIATIONS, SEE SHEET X-1

TYPICAL CROSS SECTIONS

NO SCALE

X-14

REVISED BY	DATE REVISED
J.V.	02/15/22

JAMEY VALDIVIA — CARL GIBSON III

CALCULATED-DESIGNED BY — CHECKED BY

CONSULTANT FUNCTIONAL SUPERVISOR — CARL GIBSON III

STATE OF CALIFORNIA - DEPARTMENT OF TRANSPORTATION

Caltrans

X:\SR 37_FAIRGROUNDS DRIVE\000_CAD\Sheets\005-TypXSections\0418000069ca014.dgn

LAST REVISION 00-00-00 | DATE PLOTTED => 9/2/2022 | TIME PLOTTED => 9:54:40 AM

BORDER LAST REVISED 7/2/2010 | USERNAME => jvaldivia | DGN FILE => 0418000069ca014.dgn | RELATIVE BORDER SCALE IS IN INCHES 0 1 2 3 | UNIT 0738 | PROJECT NUMBER & PHASE 04000205841

Dist	COUNTY	ROUTE	POST MILES TOTAL PROJECT	SHEET No.	TOTAL SHEETS
04	Sol	37	10.9		

REGISTERED CIVIL ENGINEER DATE

PLANS APPROVAL DATE

REGISTERED PROFESSIONAL ENGINEER No. Exp. CIVIL STATE OF CALIFORNIA

THE STATE OF CALIFORNIA OR ITS OFFICERS OR AGENTS SHALL NOT BE RESPONSIBLE FOR THE ACCURACY OR COMPLETENESS OF SCANNED COPIES OF THIS PLAN SHEET.

WMH CORPORATION
11070 WHITE ROCK RD
SUITE 140
RANCHO CORDOVA
CA 95670

SOLANO TRANSPORTATION AUTHORITY
1 HARBOR CENTER
SUITE 130
SUISUN CITY, CA 94585

PRELIMINARY PLANS SUBJECT TO REVISION

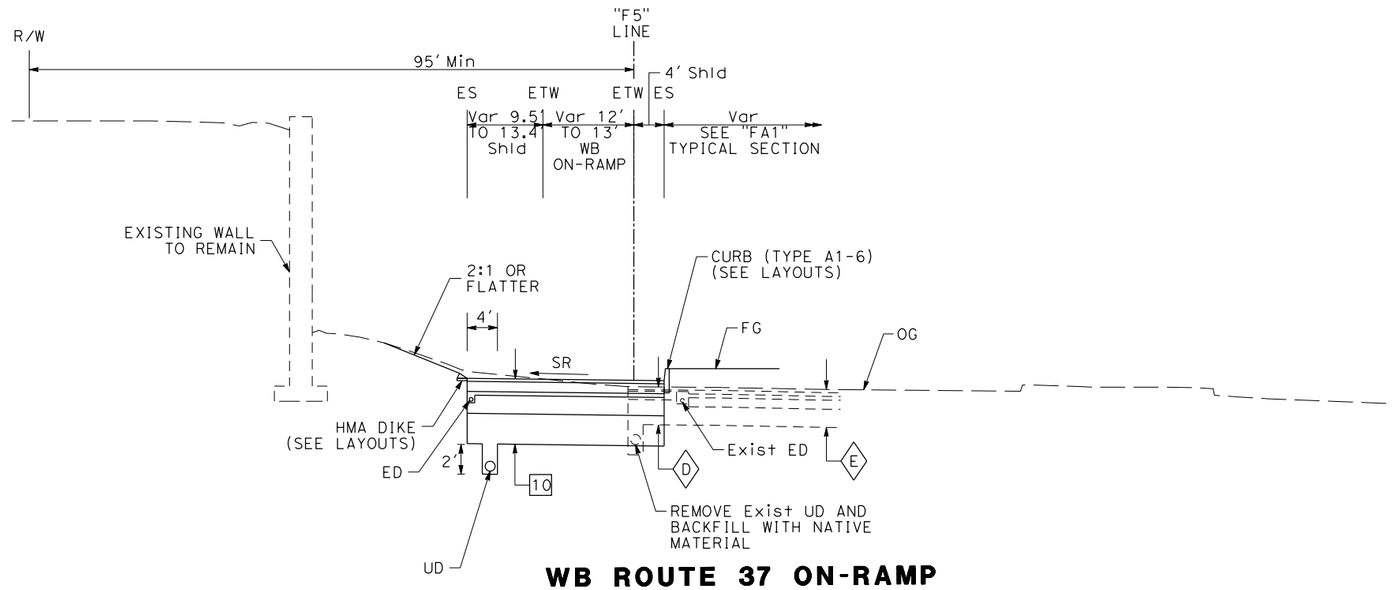

WB ROUTE 37 ON-RAMP

"F5" 372+66 TO 372+90.33

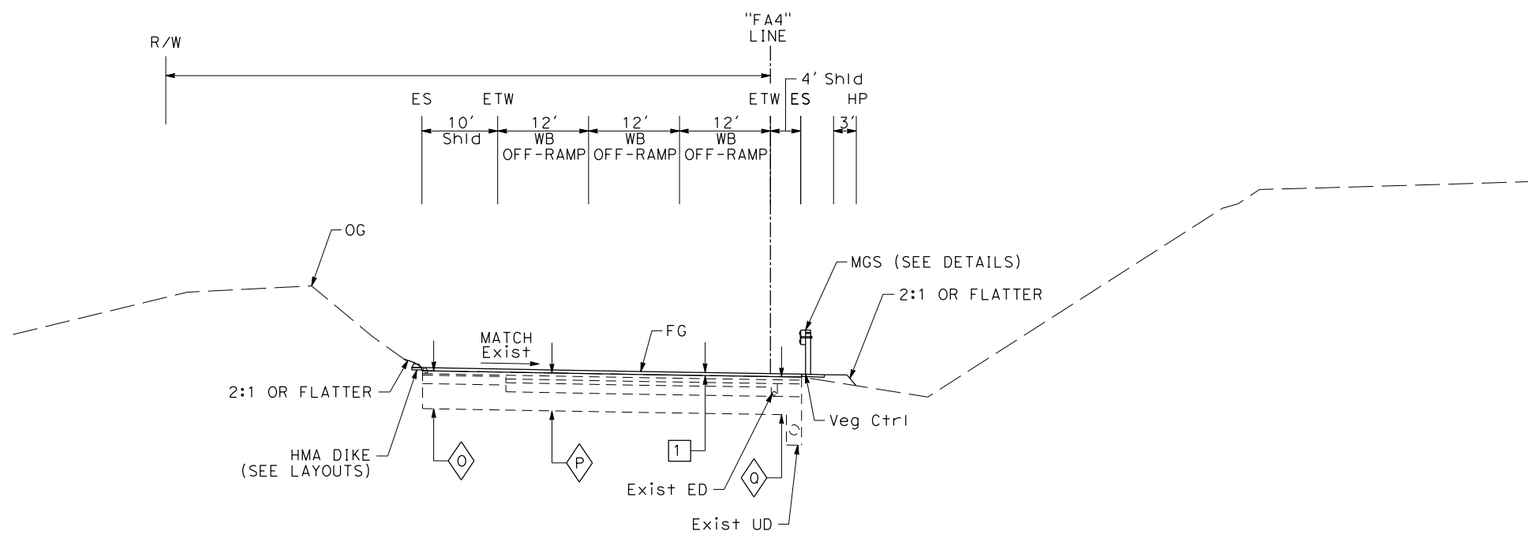

WB ROUTE 37 OFF-RAMP

"FA4" 276+17.71 TO 277+41.49

FOR NOTES AND ABBREVIATIONS, SEE SHEET X-1

TYPICAL CROSS SECTIONS

NO SCALE

X-15

REVISED BY	DATE REVISED	CALCULATED-DESIGNED BY	CHECKED BY	CONSULTANT FUNCTIONAL SUPERVISOR
J.V.	02/15/22	JAMEY VALDIVIA	CARL GIBSON III	CARL GIBSON III

STATE OF CALIFORNIA - DEPARTMENT OF TRANSPORTATION

X:\SR 37_FAIRGROUNDS DRIVE\000_CAD\Sheets\005-TypXSections\0418000069ca015.dgn

LAST REVISION 00-00-00 | DATE PLOTTED => 9/2/2022 TIME PLOTTED => 9:55:03 AM

Dist	COUNTY	ROUTE	POST MILES TOTAL PROJECT	SHEET No.	TOTAL SHEETS
04	Sol	37	10.9		

REGISTERED CIVIL ENGINEER DATE

PLANS APPROVAL DATE

REGISTERED PROFESSIONAL ENGINEER No. Exp. CIVIL STATE OF CALIFORNIA

THE STATE OF CALIFORNIA OR ITS OFFICERS OR AGENTS SHALL NOT BE RESPONSIBLE FOR THE ACCURACY OR COMPLETENESS OF SCANNED COPIES OF THIS PLAN SHEET.

WMH CORPORATION
11070 WHITE ROCK RD
SUITE 140
RANCHO CORDOVA
CA 95670

SOLANO TRANSPORTATION AUTHORITY
1 HARBOR CENTER
SUITE 130
SUISUN CITY, CA 94585

PRELIMINARY PLANS SUBJECT TO REVISION

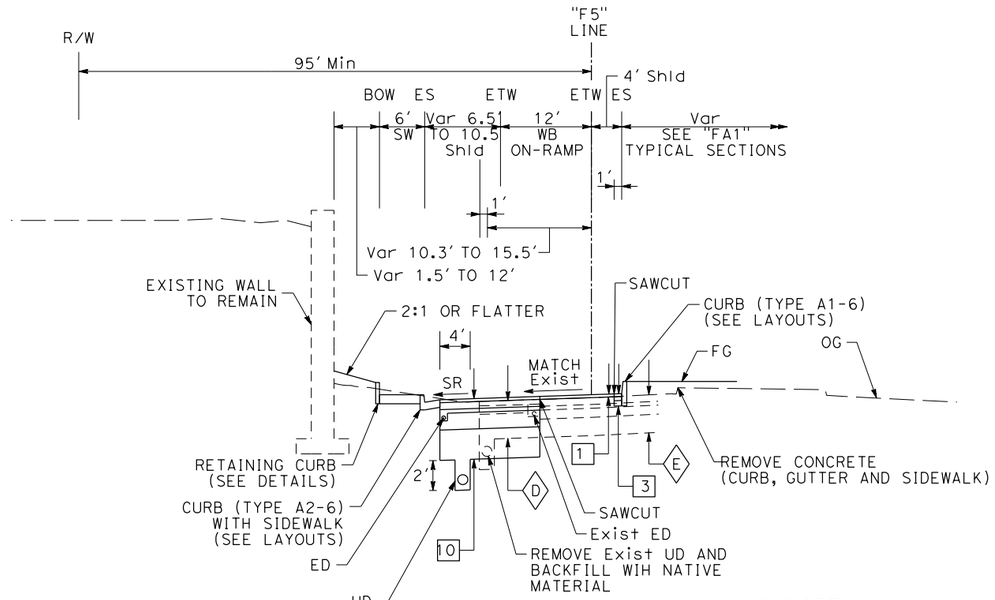

WB ROUTE 37 ON-RAMP

"F5" 373+13.05 TO 373+82.39

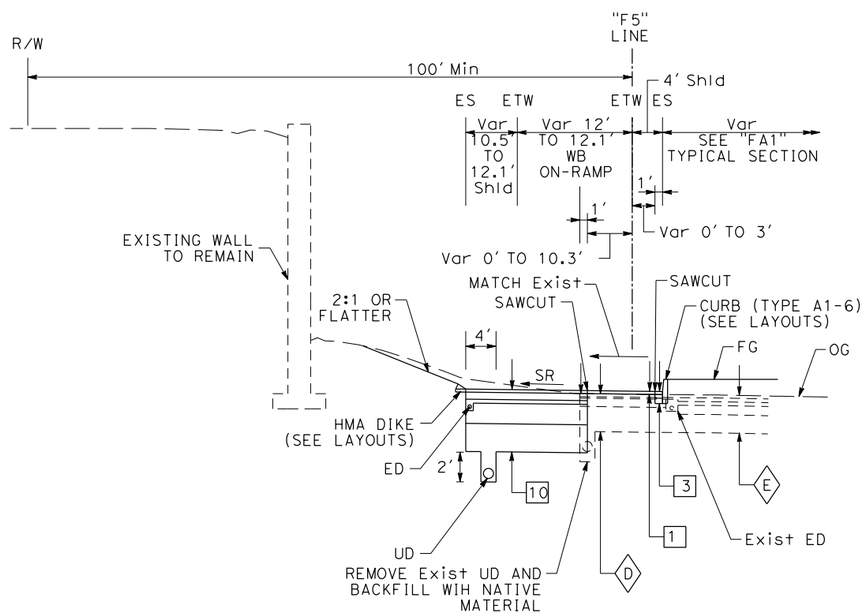

WB ROUTE 37 ON-RAMP

"F5" 372+90.33 TO 373+13.05

FOR NOTES AND ABBREVIATIONS, SEE SHEET X-1

TYPICAL CROSS SECTIONS

NO SCALE

X-16

REVISED BY	DATE REVISED	JAMEY VALDIVIA	CARL GIBSON III	CALCULATED-DESIGNED BY	CHECKED BY	CARL GIBSON III	CONSULTANT FUNCTIONAL SUPERVISOR
J.V.	02/15/22						

STATE OF CALIFORNIA - DEPARTMENT OF TRANSPORTATION

Caltrans

X:\SR 37_FAIRGROUNDS DRIVE\000_CAD\Sheets\005-TypXSections\0418000069ca016.dgn

LAST REVISION 00-00-00 | DATE PLOTTED => 9/2/2022 | TIME PLOTTED => 9:55:19 AM

BORDER LAST REVISED 7/2/2010 | USERNAME => jvaldivia | DGN FILE => 0418000069ca016.dgn | RELATIVE BORDER SCALE IS IN INCHES 0 1 2 3 | UNIT 0738 | PROJECT NUMBER & PHASE 04000205841

Dist	COUNTY	ROUTE	POST MILES TOTAL PROJECT	SHEET No.	TOTAL SHEETS
04	Sol	37	10.9		

REGISTERED CIVIL ENGINEER DATE

PLANS APPROVAL DATE

REGISTERED PROFESSIONAL ENGINEER No. Exp. CIVIL STATE OF CALIFORNIA

THE STATE OF CALIFORNIA OR ITS OFFICERS OR AGENTS SHALL NOT BE RESPONSIBLE FOR THE ACCURACY OR COMPLETENESS OF SCANNED COPIES OF THIS PLAN SHEET.

WMH CORPORATION
11070 WHITE ROCK RD
SUITE 140
RANCHO CORDOVA
CA 95670

SOLANO TRANSPORTATION AUTHORITY
1 HARBOR CENTER
SUITE 130
SUISUN CITY, CA 94585

PRELIMINARY PLANS SUBJECT TO REVISION

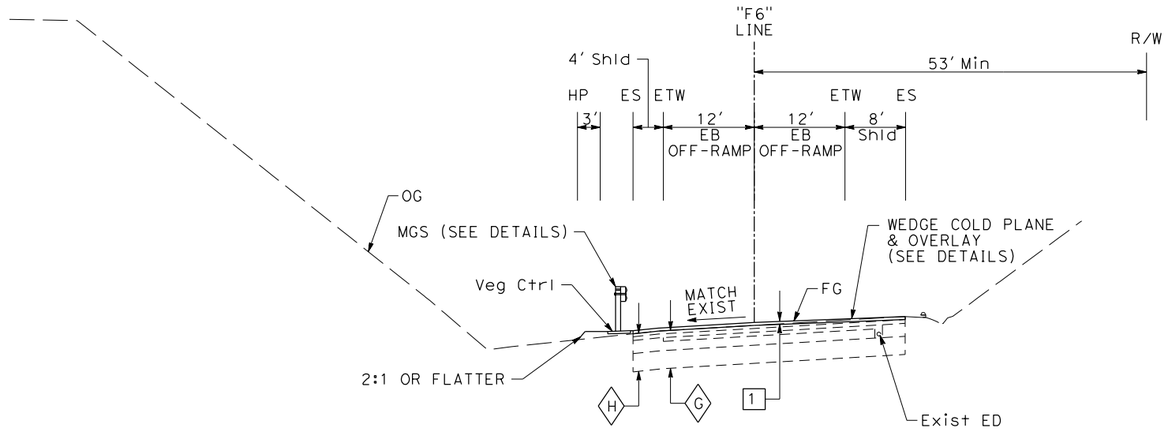

EB ROUTE 37 OFF-RAMP

"F6" 473+33.85 TO 474+94.86

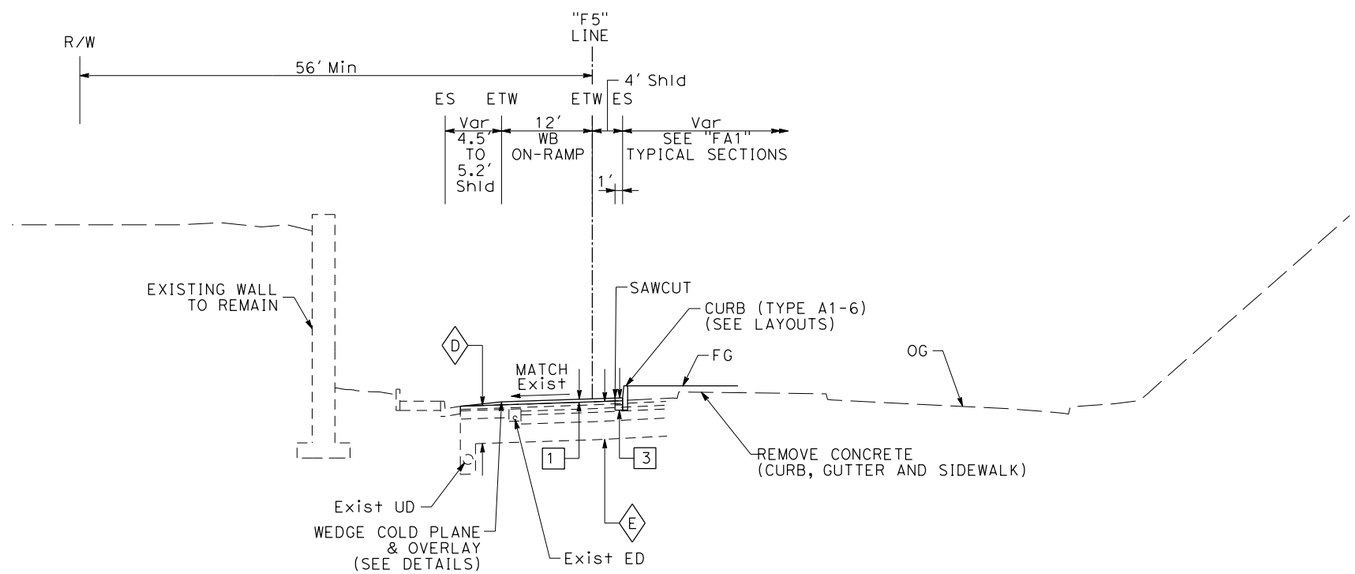

WB ROUTE 37 ON-RAMP

"F5" 373+82.39 TO 374+20.50

FOR NOTES AND ABBREVIATIONS, SEE SHEET X-1

TYPICAL CROSS SECTIONS

NO SCALE

X-17

JAMEY VALDIVIA	CARL GIBSON III	J.V.	02/15/22
CALCULATED-DESIGNED BY	CHECKED BY	REVISED BY	DATE REVISED
CARL GIBSON III			
CONSULTANT FUNCTIONAL SUPERVISOR			

STATE OF CALIFORNIA - DEPARTMENT OF TRANSPORTATION

Caltrans

X:\SR 37_FAIRGROUNDS DRIVE\000_CAD\Sheets\005-TypXSections\0418000069ca017.dgn

LAST REVISION 00-00-00 | DATE PLOTTED => 9/2/2022 TIME PLOTTED => 9:55:23 AM

BORDER LAST REVISED 7/2/2010 | USERNAME => jvaldivia DGN FILE => 0418000069ca017.dgn | RELATIVE BORDER SCALE IS IN INCHES 0 1 2 3 | UNIT 0738 | PROJECT NUMBER & PHASE 04000205841

Dist	COUNTY	ROUTE	POST MILES TOTAL PROJECT	SHEET No.	TOTAL SHEETS
04	Sol	37	10.9		

REGISTERED CIVIL ENGINEER DATE

PLANS APPROVAL DATE

REGISTERED PROFESSIONAL ENGINEER No. Exp. CIVIL STATE OF CALIFORNIA

THE STATE OF CALIFORNIA OR ITS OFFICERS OR AGENTS SHALL NOT BE RESPONSIBLE FOR THE ACCURACY OR COMPLETENESS OF SCANNED COPIES OF THIS PLAN SHEET.

WMH CORPORATION
11070 WHITE ROCK RD
SUITE 140
RANCHO CORDOVA
CA 95670

SOLANO TRANSPORTATION AUTHORITY
1 HARBOR CENTER
SUITE 130
SUISUN CITY, CA 94585

PRELIMINARY PLANS SUBJECT TO REVISION

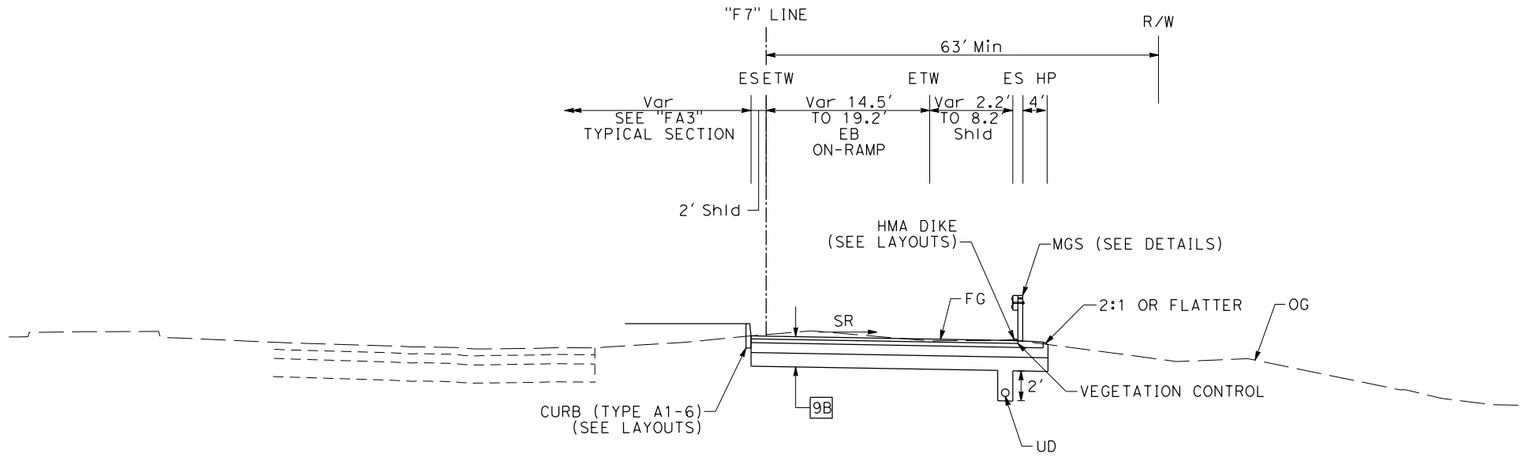

EB ROUTE 37 ON-RAMP

"F7" 370+23.21 TO 370+91.91

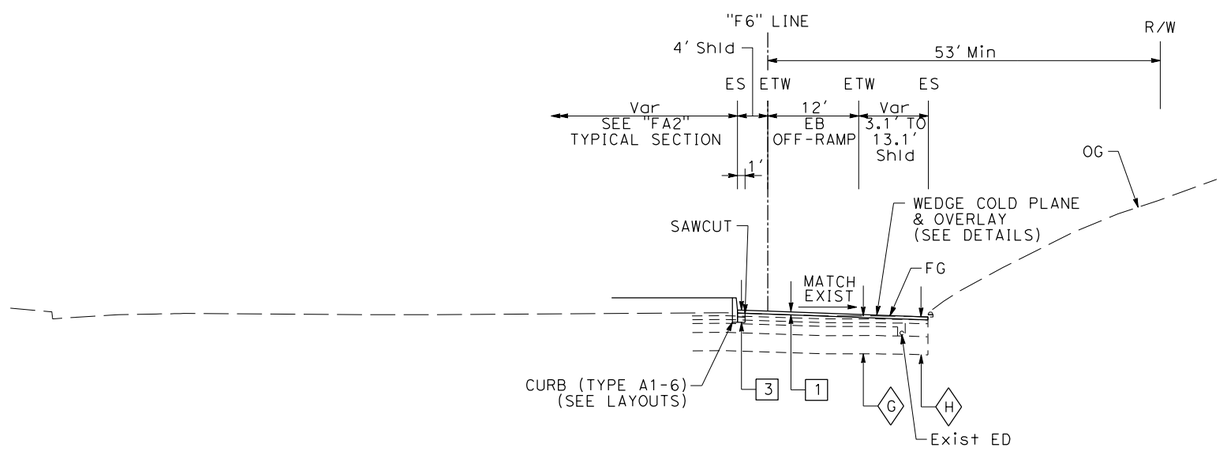

EB ROUTE 37 OFF-RAMP

"F6" 474+94.86 TO 476+12.16

FOR NOTES AND ABBREVIATIONS, SEE SHEET X-1

TYPICAL CROSS SECTIONS

NO SCALE

X-18

REVISED BY	DATE REVISED	CALCULATED-DESIGNED BY	CHECKED BY	CONSULTANT FUNCTIONAL SUPERVISOR
J.V.	02/15/22	JAMEY VALDIVIA	CARL GIBSON III	CARL GIBSON III

STATE OF CALIFORNIA - DEPARTMENT OF TRANSPORTATION

X:\SR 37_FAIRGROUNDS DRIVE\000_CAD\Sheets\005-TypXSections\0418000069ca018.dgn

LAST REVISION 00-00-00 | DATE PLOTTED => 9/2/2022 | TIME PLOTTED => 9:55:27 AM

Dist	COUNTY	ROUTE	POST MILES TOTAL PROJECT	SHEET No.	TOTAL SHEETS
04	Sol	37	10.9		

REGISTERED CIVIL ENGINEER DATE

PLANS APPROVAL DATE

REGISTERED PROFESSIONAL ENGINEER No. Exp. CIVIL STATE OF CALIFORNIA

THE STATE OF CALIFORNIA OR ITS OFFICERS OR AGENTS SHALL NOT BE RESPONSIBLE FOR THE ACCURACY OR COMPLETENESS OF SCANNED COPIES OF THIS PLAN SHEET.

WMH CORPORATION
11070 WHITE ROCK RD
SUITE 140
RANCHO CORDOVA
CA 95670

SOLANO TRANSPORTATION AUTHORITY
1 HARBOR CENTER
SUITE 130
SUISUN CITY, CA 94585

PRELIMINARY PLANS SUBJECT TO REVISION

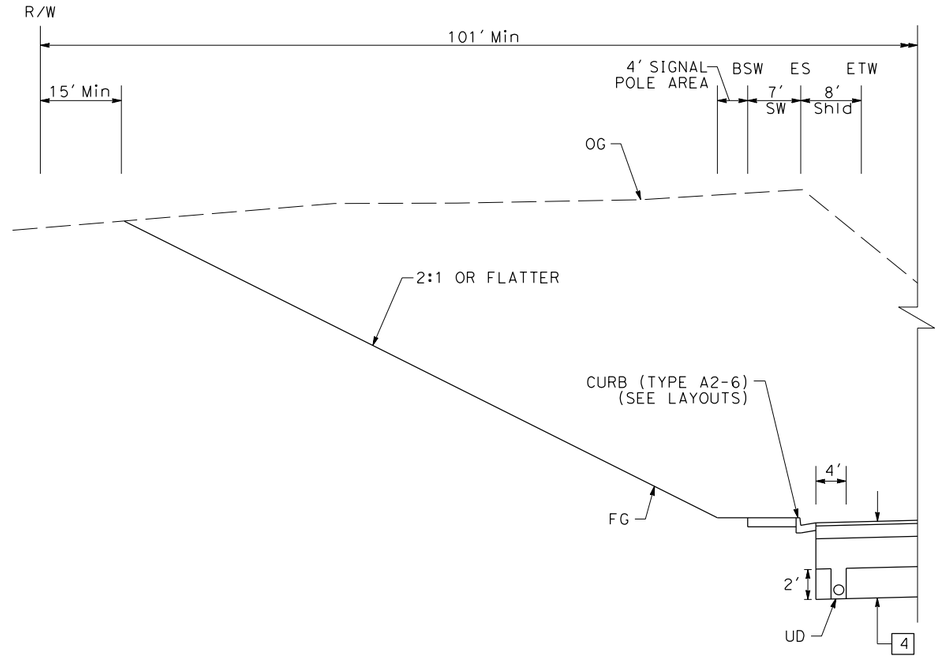

WB ROUTE 37 OFF-RAMP

"F8" 480+70.39 TO 480+77.08

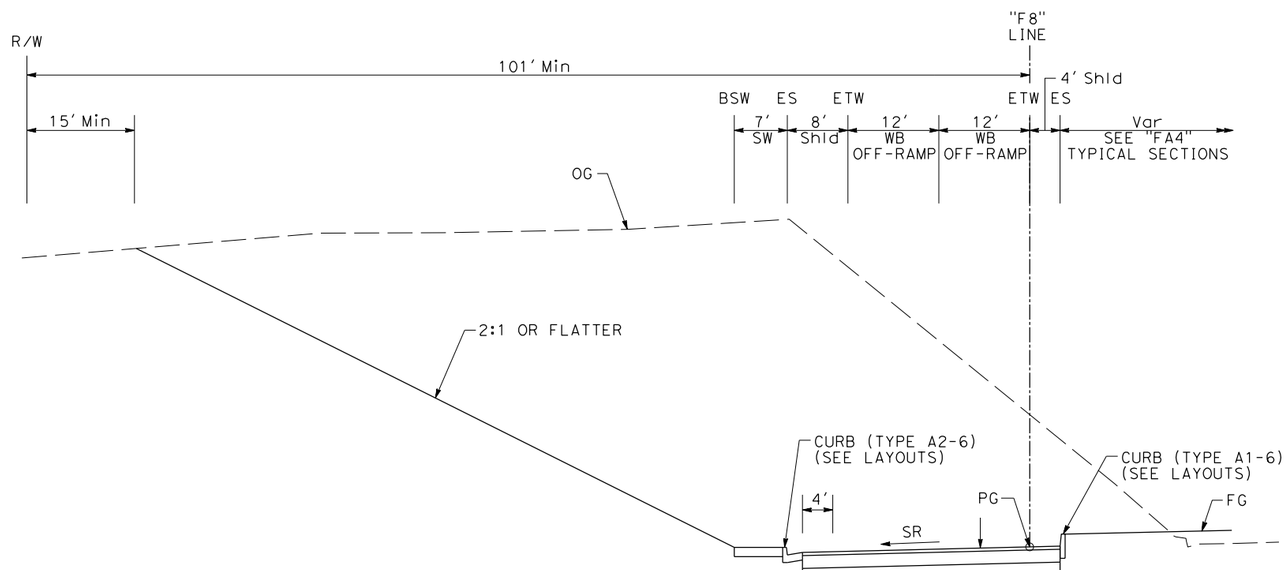

WB ROUTE 37 OFF-RAMP

"F8" 480+53.40 TO 480+77.08

FOR NOTES AND ABBREVIATIONS, SEE SHEET X-1

TYPICAL CROSS SECTIONS

NO SCALE

X-19

REVISED BY	DATE REVISED
J.V.	02/15/22

JAMEY VALDIVIA — CARL GIBSON III

CALCULATED-DESIGNED BY — CHECKED BY

CONSULTANT FUNCTIONAL SUPERVISOR — CARL GIBSON III

STATE OF CALIFORNIA - DEPARTMENT OF TRANSPORTATION

Caltrans

X:\SR 37_FAIRGROUNDS DRIVE\000_CAD\Sheets\005-TypXSections\0418000069ca019.dgn

LAST REVISION 00-00-00 | DATE PLOTTED => 9/2/2022 | TIME PLOTTED => 9:55:36 AM

BORDER LAST REVISED 7/2/2010 | USERNAME => jvaldivia | DGN FILE => 0418000069ca019.dgn | RELATIVE BORDER SCALE IS IN INCHES 0 1 2 3 | UNIT 0738 | PROJECT NUMBER & PHASE 04000205841

Dist	COUNTY	ROUTE	POST MILES TOTAL PROJECT	SHEET No.	TOTAL SHEETS
04	Sol	37	10.9		

REGISTERED CIVIL ENGINEER DATE

PLANS APPROVAL DATE

REGISTERED PROFESSIONAL ENGINEER No. Exp. CIVIL STATE OF CALIFORNIA

THE STATE OF CALIFORNIA OR ITS OFFICERS OR AGENTS SHALL NOT BE RESPONSIBLE FOR THE ACCURACY OR COMPLETENESS OF SCANNED COPIES OF THIS PLAN SHEET.

WMH CORPORATION
11070 WHITE ROCK RD
SUITE 140
RANCHO CORDOVA
CA 95670

SOLANO TRANSPORTATION AUTHORITY
1 HARBOR CENTER
SUITE 130
SUISUN CITY, CA 94585

PRELIMINARY PLANS SUBJECT TO REVISION

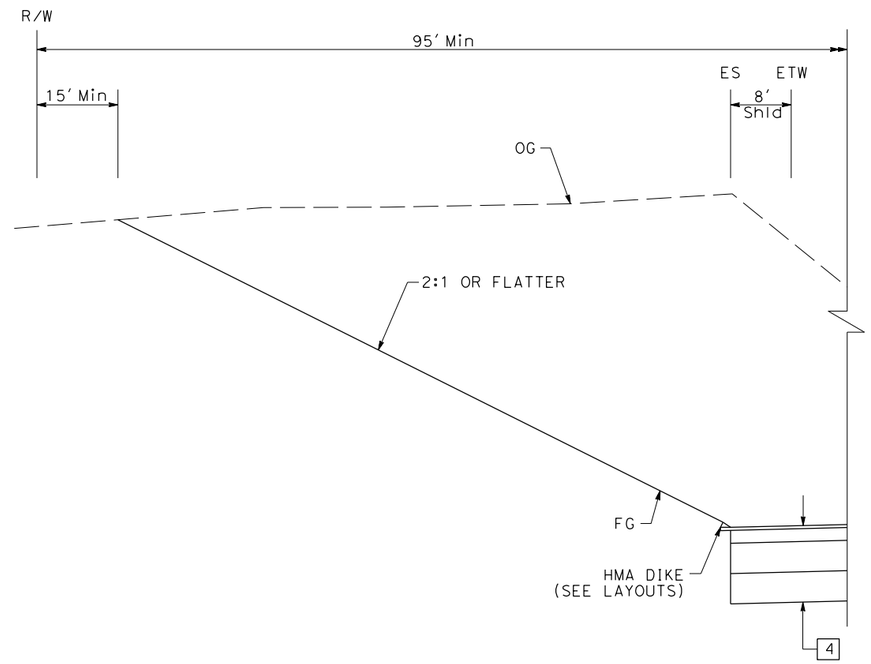

WB ROUTE 37 OFF-RAMP

"F8" 480+77.08 TO 481+20.19

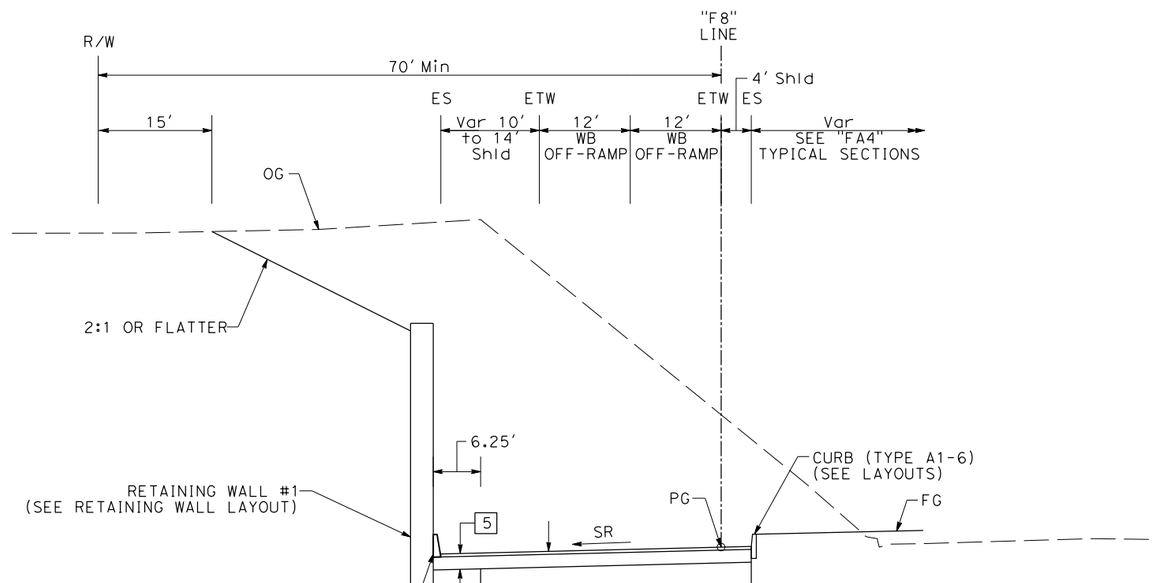

WB ROUTE 37 OFF-RAMP

"F8" 480+77.08 TO 482+76.48

FOR NOTES AND ABBREVIATIONS, SEE SHEET X-1

TYPICAL CROSS SECTIONS

NO SCALE

X-20

REVISED BY	DATE REVISED
J.V.	02/15/22

CALCULATED-DESIGNED BY	CHECKED BY
JAMEY VALDIVIA	CARL GIBSON III

CONSULTANT FUNCTIONAL SUPERVISOR
CARL GIBSON III

STATE OF CALIFORNIA - DEPARTMENT OF TRANSPORTATION

Caltrans

X:\SR 37_FAIRGROUNDS DRIVE\000_CAD\Sheets\005-TypXSections\0418000069ca020.dgn

LAST REVISION 00-00-00 | DATE PLOTTED => 9/2/2022 TIME PLOTTED => 9:55:40 AM

Dist	COUNTY	ROUTE	POST MILES TOTAL PROJECT	SHEET No.	TOTAL SHEETS
04	Sol	37	10.9		

REGISTERED CIVIL ENGINEER DATE

PLANS APPROVAL DATE

REGISTERED PROFESSIONAL ENGINEER No. Exp. CIVIL STATE OF CALIFORNIA

THE STATE OF CALIFORNIA OR ITS OFFICERS OR AGENTS SHALL NOT BE RESPONSIBLE FOR THE ACCURACY OR COMPLETENESS OF SCANNED COPIES OF THIS PLAN SHEET.

WMH CORPORATION
11070 WHITE ROCK RD
SUITE 140
RANCHO CORDOVA
CA 95670

SOLANO TRANSPORTATION AUTHORITY
1 HARBOR CENTER
SUITE 130
SUISUN CITY, CA 94585

PRELIMINARY PLANS SUBJECT TO REVISION

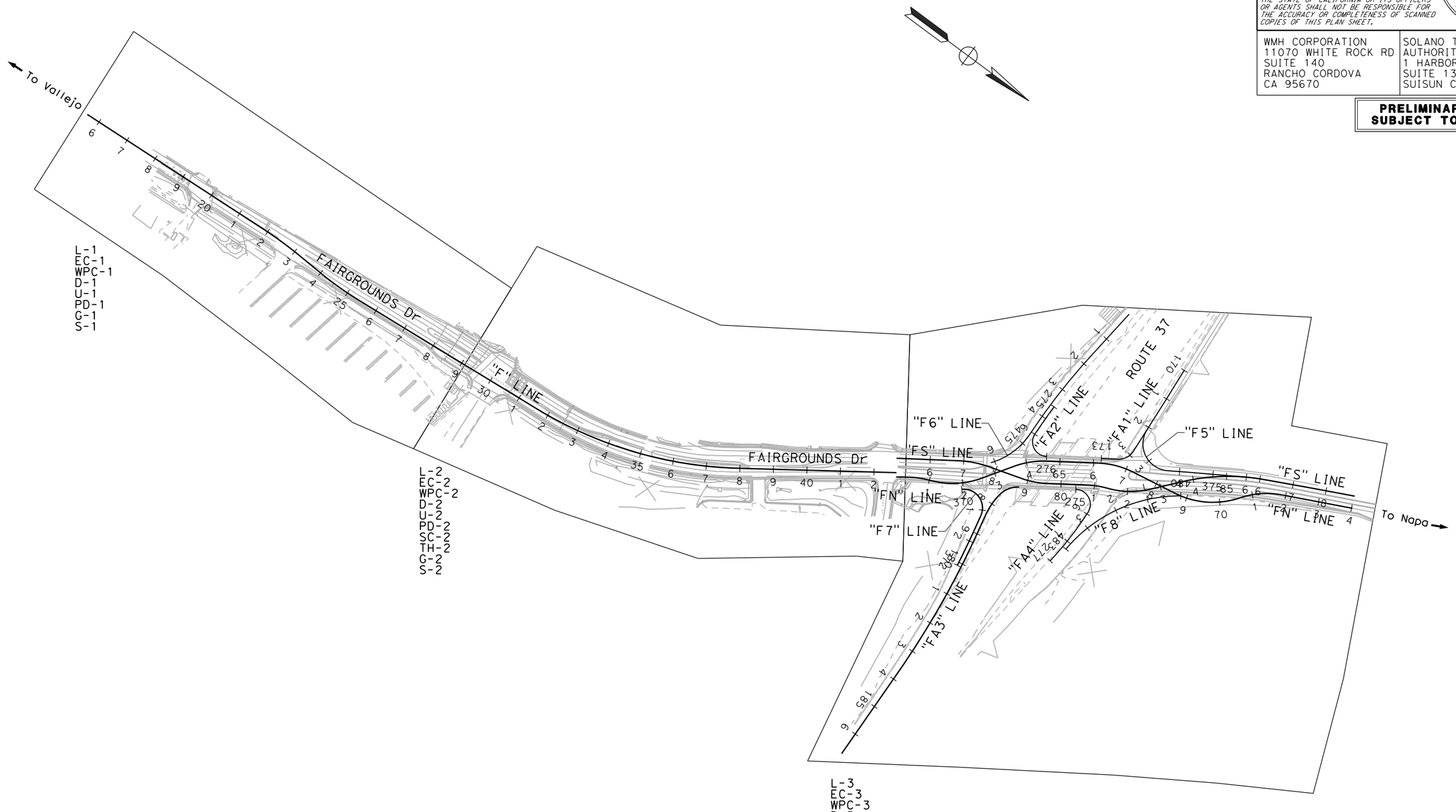

KEY MAP AND LINE INDEX

NO SCALE

K-1

REVISED BY	DATE REVISED
J.V.	02/15/22

JAMEY VALDIVIA	CARL GIBSON III	CALCULATED-DESIGNED BY	CHECKED BY	CONSULTANT FUNCTIONAL SUPERVISOR	CARL GIBSON III

STATE OF CALIFORNIA - DEPARTMENT OF TRANSPORTATION

Caltrans

X:\SR 37_FAIRGROUNDS DRIVE\000_CAD\Sheets\006-Keymap\044A4414da001.dgn

LAST REVISION 00-00-00 | DATE PLOTTED => 9/2/2022 | TIME PLOTTED => 9:57:51 AM

BORDER LAST REVISED 7/2/2010 | USERNAME => jvaldivia | DGN FILE => 044A4414da001.dgn | RELATIVE BORDER SCALE IS IN INCHES 0 1 2 3 | UNIT 0738 | PROJECT NUMBER & PHASE 04000205841

Dist	COUNTY	ROUTE	POST MILES TOTAL PROJECT	SHEET No.	TOTAL SHEETS
04	Sol	37	10.9		

PROFESSIONAL LAND SURVEYOR DATE

PLANS APPROVAL DATE

LICENSED LAND SURVEYOR SUDHIR K. CHAUDHARY LS 8993 STATE OF CALIFORNIA

THE STATE OF CALIFORNIA OR ITS OFFICERS OR AGENTS SHALL NOT BE RESPONSIBLE FOR THE ACCURACY OR COMPLETENESS OF SCANNED COPIES OF THIS PLAN SHEET.

WMH CORPORATION
11070 WHITE ROCK RD
SUITE 140
RANCHO CORDOVA
CA 95670

SOLANO TRANSPORATION AUTHORITY
1 HARBOR CENTER
SUITE 130
SUISUN CITY, CA 94585

NOTES:

1. FOR COMPLETE PROJECT CONTROL DATA, SEE THE SURVEY RECORDS ON FILE IN THE SURVEYS DEPARTMENT AT THE DISTRICT OFFICE.

2. BASIS OF BEARINGS AND COORDINATES:
   COORDINATES, BEARINGS AND DISTANCES SHOWN ARE BASED UPON THE CALIFORNIA COORDINATE SYSTEM OF 1983 (CCS 83), ZONE 2 EPOCH 1991.35. ALL DISTANCES ARE IN U.S. SURVEY FOOT. MULTIPLY DISTANCES SHOWN BY 0.999949 TO OBTAIN GROUND DISTANCES. THIS CONTROL NET WAS CONSTRAINED TO THE CITY OF VALLEJO GEODETIC CONTROL SURVEY FOR THE VSFCD, RECORD OF SURVEY, BOOK 22 OF SURVEYS AT PAGES 23-25, SOLANO COUNTY RECORDS. SPECIFICALLY POINTS 9625, 9629, 9645, AND 9646.

   CONTROL POINTS 100, 102, AND 105 WERE SET BY RTK SURVEY METHODS. 3rd ORDER.

   CONTROL POINTS 101, 103, 104, 200, 201, AND LS218 THROUGH 226 WERE SET BY CONVENTIONAL SURVEY. 3rd ORDER.

3. BASIS OF ELEVATIONS:
   HELD ELEVATION OF 99.92 AT CONTROL POINT 100. SAID ELEVATION DERIVED FROM THE AFOREMENTIONED SITE CALIBRATION FROM CONTROL POINT 100, DIGITAL LEVEL TECHNIQUES WERE EMPLOYED TO ESTABLISH THE ELEVATIONS AT CONTROL POINTS 101 THROUGH 105, 200, AND 201. FOR POINTS LS 218 THROUGH LS 226 THE EQUATIONS WERE ESTABLISHED USING TOTAL STATION TECHNIQUES.

LEGEND:

● FOUND MONUMENT

▲ SET TRAVERSE POINT

VSFCD VALLEJO SANITATION AND FLOOD CONTROL DISTRICT

CONTROL FOR DESIGN AND CONSTRUCTION

ID	MONUMENT NUMBER	NORTHING	EASTING	ELEVATION	DESCRIPTION
2	VSFCD-9625 *	1814105.531	6496426.636	116.75	WELLMON - NOT IN PROJECT LIMITS
3	VSFCD-9629 *	1811842.914	6491439.144	179.10	WELLMON - NOT IN PROJECT LIMITS
4	VSFCD-9645 *	1806018.068	6493022.918	126.53	2" BRASS CAP IN AC - NOT IN PROJECT LIMITS
5	VSFCD-9646 *	1806076.977	6499382.810	240.80	WELLMON - NOT IN PROJECT LIMITS
6	100 **	1813201.163	6494900.934	99.92	SET MAG NAIL+CA WASHER
7	101	1812831.178	6495191.830	95.25	SET MAG NAIL+CA WASHER
8	102 **	1812350.135	6495492.014	86.86	SET MAG NAIL+CA WASHER
9	103	1811906.279	6495573.054	87.23	SET MAG NAIL+CA WASHER
10	104	1811335.971	6495607.491	86.69	SET MAG NAIL+CA WASHER
11	105 **	1810785.127	6495641.609	86.98	SET MAG NAIL+CA WASHER
13	200	1813267.137	6494896.773	98.78	SET MAG NAIL+CA WASHER
14	201	1813380.723	6494816.396	99.21	SET MAG NAIL+CA WASHER
15	LS218	1813257.877	6495074.261	105.41	SET MAG NAIL
16	LS219	1813296.190	6495063.530	105.89	SET 60D SPIKE
17	LS220	1813211.027	6494665.478	102.73	SET MAG NAIL
18	LS221	1813252.496	6494657.153	102.09	SET 60D SPK
19	LS222	1813506.210	6494907.636	101.98	SET 60D SPK
20	LS223	1813556.735	6494906.188	103.14	SET MAG NAIL
21	LS224	1813540.433	6494524.658	106.17	SET 60D SPK
22	LS225	1813486.278	6494461.951	108.47	SET 60D SPK
23	LS226	1813545.811	6494647.236	102.99	SET CUT-X

* SURVEY CONTROL CLARIFICATIONS. REF. TO 22 RS 23-25 - SOLANO COUNTY

** CONTROL TIED USING RTK SURVEYS USING AN APPLIED SITE CALIBRATION

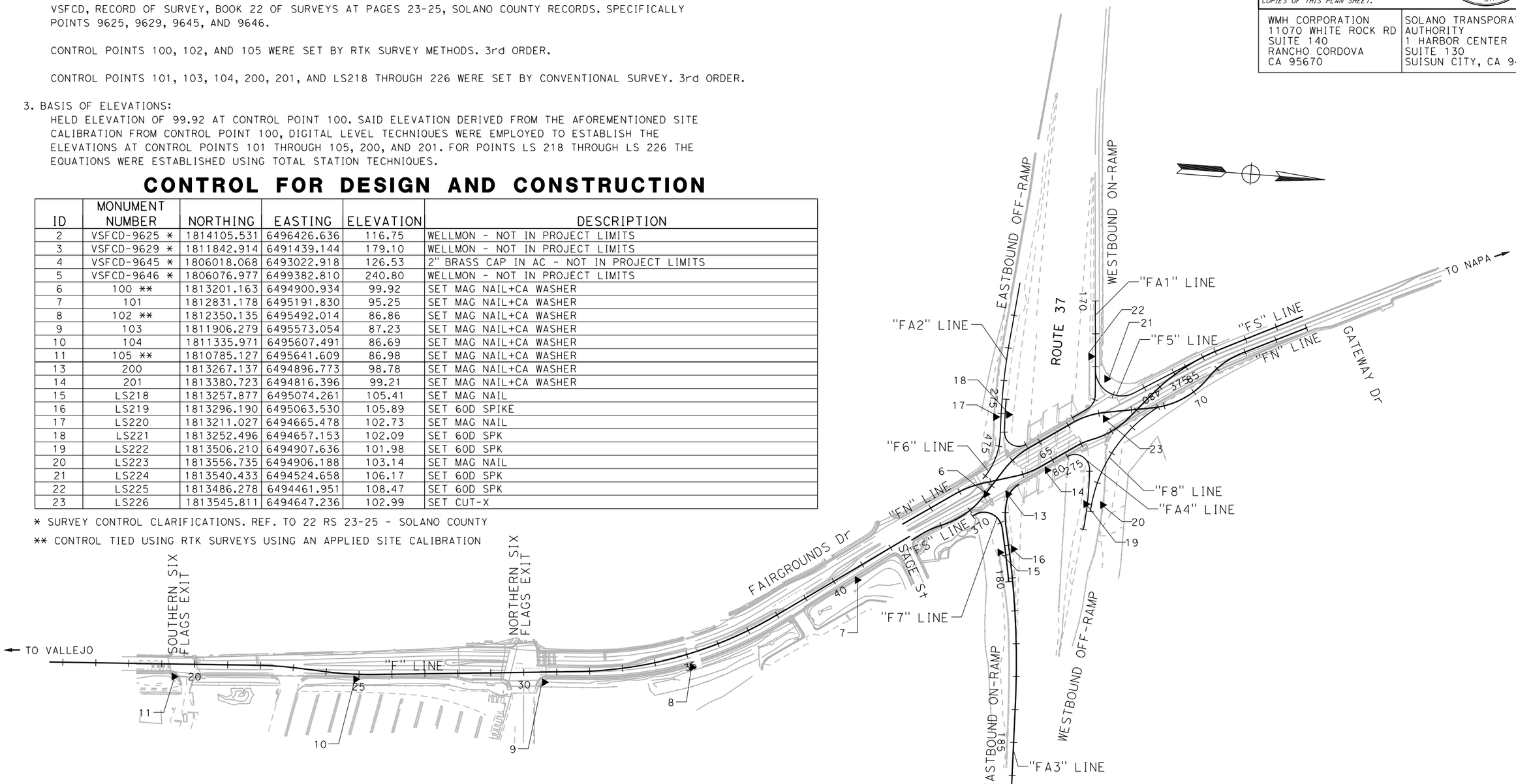

PROJECT CONTROL

NO SCALE

PC-1

APPROVED FOR PROJECT CONTROL INFORMATION ONLY

STATE OF CALIFORNIA - DEPARTMENT OF TRANSPORTATION

Caltrans

CONSULTANT FUNCTIONAL SUPERVISOR: CARL GIBSON III

CALCULATED-DESIGNED BY: SUDHIR CHAUDHARY — CHECKED BY: CARL GIBSON III

REVISED BY: SC — DATE REVISED: 02/15/22

X:\SR 37_FAIRGROUNDS DRIVE\000_CAD\Sheets\008-Proj_Ctrl\04000205841dc001.dgn

LAST REVISION 00-00-00 — DATE PLOTTED => 9/2/2022 — TIME PLOTTED => 9:58:58 AM

Dist	COUNTY	ROUTE	POST MILES TOTAL PROJECT	SHEET No.	TOTAL SHEETS
04	Sol	37	10.9		

REGISTERED CIVIL ENGINEER DATE

PLANS APPROVAL DATE

REGISTERED PROFESSIONAL ENGINEER No. Exp. CIVIL STATE OF CALIFORNIA

THE STATE OF CALIFORNIA OR ITS OFFICERS OR AGENTS SHALL NOT BE RESPONSIBLE FOR THE ACCURACY OR COMPLETENESS OF SCANNED COPIES OF THIS PLAN SHEET.

WMH CORPORATION
11070 WHITE ROCK RD
SUITE 140
RANCHO CORDOVA
CA 95670

SOLANO TRANSPORTATION AUTHORITY
1 HARBOR CENTER
SUITE 130
SUISUN CITY, CA 94585

PRELIMINARY PLANS SUBJECT TO REVISION

NOTES:

1. FOR ACCURATE RIGHT OF WAY DATA, CONTACT RIGHT OF WAY ENGINEERING AT THE DISTRICT OFFICE.
2. FOR STRUCTURAL SECTIONS, SEE TYPICAL SECTIONS.
3. FOR LOCATIONS, LIMITS, AND TYPES OF MGS AND CONCRETE BARRIER, SEE CONSTRUCTION DETAILS.
4. FOR LOCATIONS, LIMITS, AND DETAILS OF DITCHES AND BIOFILTRATION SWALES, SEE DRAINAGE PLANS.
5. FOR MEDIAN CURB MODIFICATIONS IN PARKING LOT, SEE DETAILS.
6. FOR ARCHAEOLOGICAL MONITORING AREA, SEE EROSION CONTROL PLANS.

LEGEND:

(No.)	CURVE DATA NUMBER
—x———x—	FENCE
	REMOVE TREE
—x x—TCE—x x—	TEMPORARY CONSTRUCTION EASEMENT

ABBREVIATIONS:

BOC	BACK OF CURB
BOW	BACK OF WALK
CB (TYPE)	CONCRETE BARRIER (TYPE)
CFL	CURB & GUTTER FLOWLINE
DFL	DIKE FLOWLINE
HDAS	HMA DIKE (TYPE A) & SIDEWALK
LOG	LIP OF GUTTER
MFL	MEDIAN CURB FLOWLINE
VCGS	CITY OF VALLEJO STANDARD VERTICAL CURB, GUTTER, & SIDEWALK
VTAC	CITY OF VALLEJO TYPE A CURB

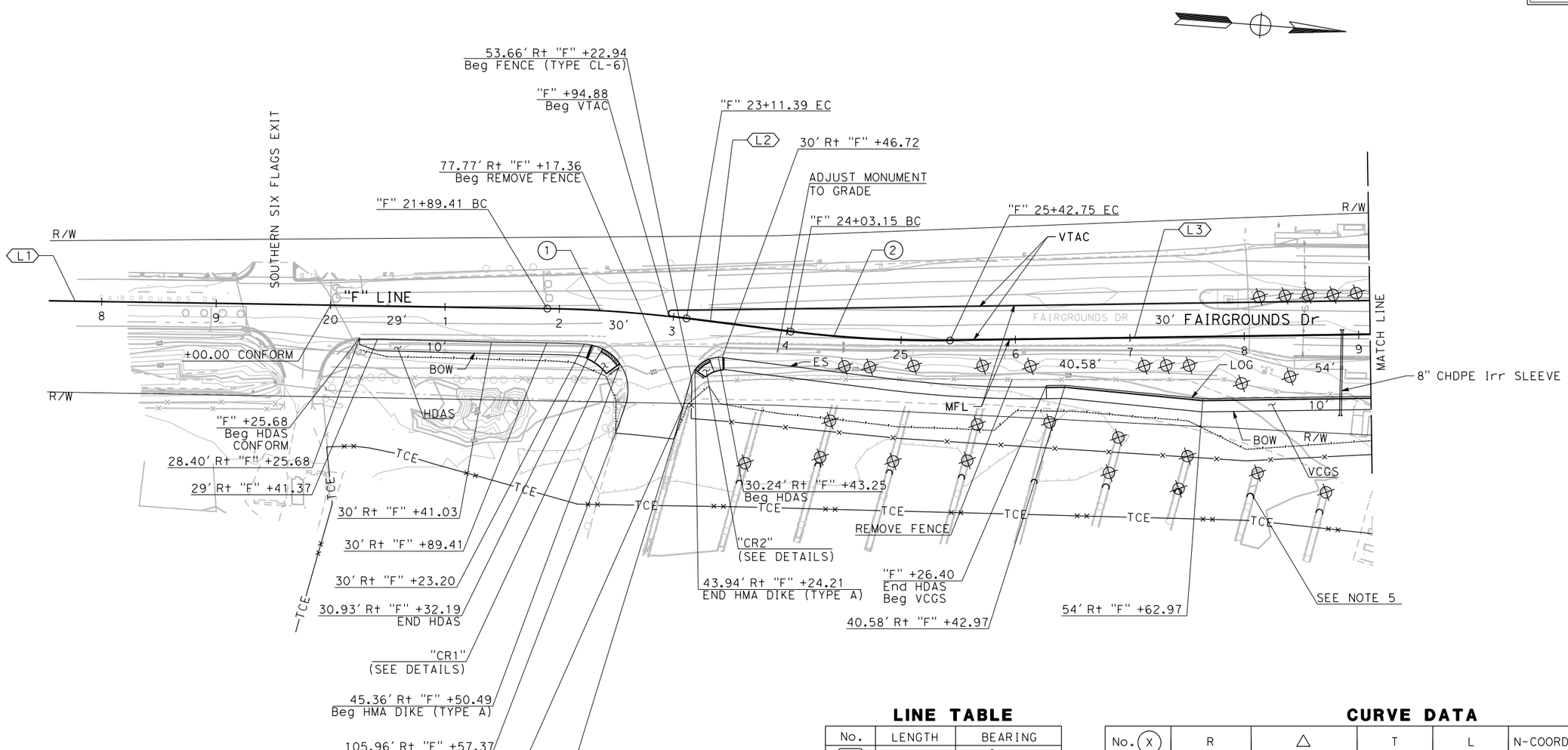

LINE TABLE

No.	LENGTH	BEARING
L1	630.55'	N 3°26'22" W
L2	91.75'	N 2°50'25" E
L3	617.47'	N 5°09'29" W

CURVE DATA

No. (X)	R	△	T	L	N-COORDINATE	E-COORDINATE
1	1113.00'	6°16'47"	61.05'	121.99'	1811101.70	6496698.67
2	1000.00'	7°59'54"	69.91'	139.60'	1811298.04	6494592.82

LAYOUT

SCALE: 1" = 50'

L-1

REVISED BY	DATE REVISED
J.R.	02/15/22

ARIANA CASTILLO — CALCULATED-DESIGNED BY
CARL GIBSON III — CHECKED BY
CARL GIBSON III — CONSULTANT FUNCTIONAL SUPERVISOR

STATE OF CALIFORNIA - DEPARTMENT OF TRANSPORTATION
Caltrans

X:\SR 37_FAIRGROUNDS DRIVE\000_CAD\Sheets\009-Layouts\044A4414ea001.dgn

LAST REVISION 00-00-00 | DATE PLOTTED => 3/30/2023 | TIME PLOTTED => 9:12:05 AM

Dist	COUNTY	ROUTE	POST MILES TOTAL PROJECT	SHEET No.	TOTAL SHEETS
04	Sol	37	10.9		

REGISTERED CIVIL ENGINEER DATE

PLANS APPROVAL DATE

REGISTERED PROFESSIONAL ENGINEER No. Exp. CIVIL STATE OF CALIFORNIA

THE STATE OF CALIFORNIA OR ITS OFFICERS OR AGENTS SHALL NOT BE RESPONSIBLE FOR THE ACCURACY OR COMPLETENESS OF SCANNED COPIES OF THIS PLAN SHEET.

WMH CORPORATION
11070 WHITE ROCK RD
SUITE 140
RANCHO CORDOVA
CA 95670

SOLANO TRANSPORTATION AUTHORITY
1 HARBOR CENTER
SUITE 130
SUISUN CITY, CA 94585

PRELIMINARY PLANS SUBJECT TO REVISION

NOTE:

FOR ACCURATE RIGHT OF WAY DATA, CONTACT RIGHT OF WAY ENGINEERING AT THE DISTRICT OFFICE.

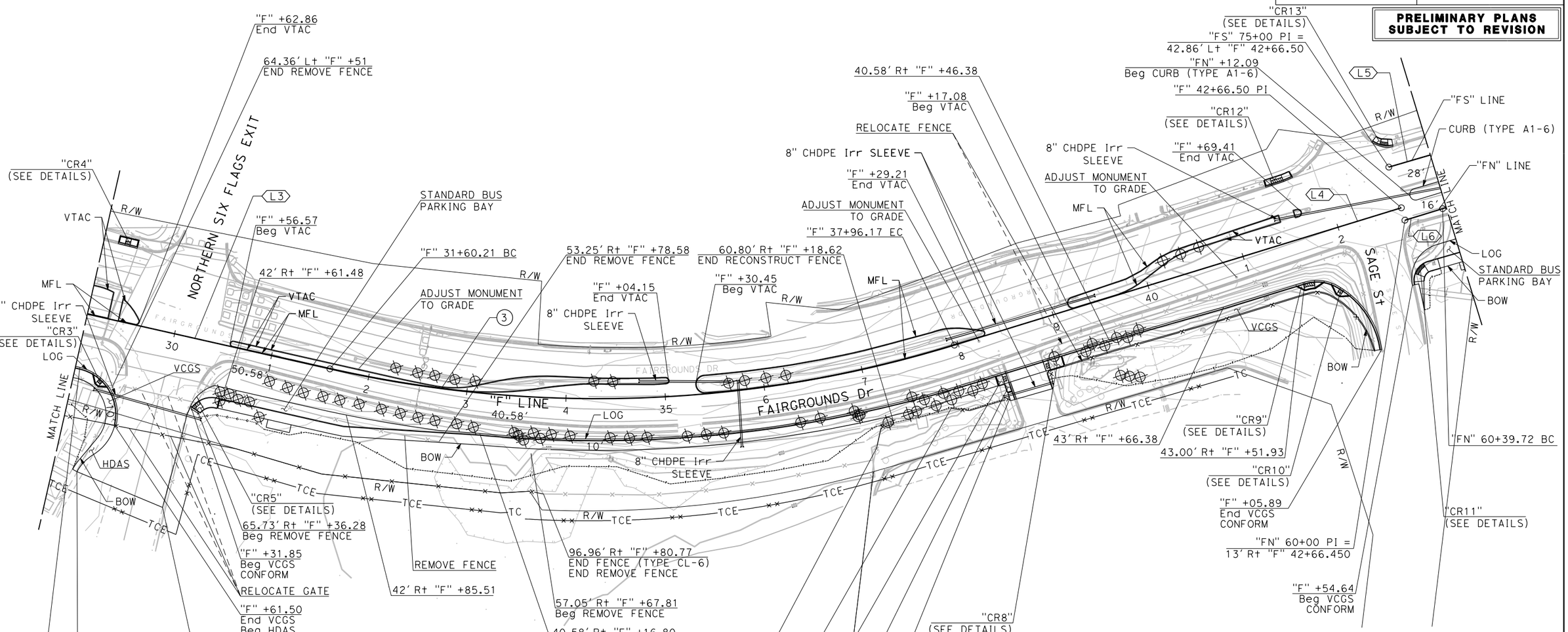

LINE TABLE

No.	LENGTH	BEARING
L3	617.47'	N 5°09'29" W
L4	470.33'	N 34°58'33" W
L5	184.94'	N 34°12'05" W
L6	39.72'	N 34°58'33" W

CURVE DATA

No. (X)	R	△	T	L	N-COORDINATE	E-COORDINATE
3	1222.00'	29°49'04"	325.35'	635.95'	1811893.05	6494316.20

FOR NOTES, ABBREVIATIONS AND LEGEND, SEE SHEET L-1

LAYOUT

SCALE: 1" = 50'

L-2

REVISED BY	DATE REVISED
J.R.	02/15/22

CALCULATED- ARIANA CASTILLO
DESIGNED BY CARL GIBSON III
CHECKED BY
CONSULTANT FUNCTIONAL SUPERVISOR CARL GIBSON III

STATE OF CALIFORNIA - DEPARTMENT OF TRANSPORTATION

Caltrans

X:\SR 37_FAIRGROUNDS DRIVE\000_CAD\Sheets\009-Layouts\044A4414ea002.dgn

LAST REVISION 00-00-00 | DATE PLOTTED => 3/30/2023 | TIME PLOTTED => 9:16:19 AM

BORDER LAST REVISED 7/2/2010 | USERNAME => acastillo | DGN FILE => 044A4414ea002.dgn | RELATIVE BORDER SCALE IS IN INCHES 0 1 2 3 | UNIT 0738 | PROJECT NUMBER & PHASE 04000205841

Dist	COUNTY	ROUTE	POST MILES TOTAL PROJECT	SHEET No.	TOTAL SHEETS
04	Sol	37	10.9		

REGISTERED CIVIL ENGINEER DATE

PLANS APPROVAL DATE

REGISTERED PROFESSIONAL ENGINEER No. Exp. CIVIL STATE OF CALIFORNIA

THE STATE OF CALIFORNIA OR ITS OFFICERS OR AGENTS SHALL NOT BE RESPONSIBLE FOR THE ACCURACY OR COMPLETENESS OF SCANNED COPIES OF THIS PLAN SHEET.

WMH CORPORATION
11070 WHITE ROCK RD
SUITE 140
RANCHO CORDOVA
CA 95670

SOLANO TRANSPORTATION AUTHORITY
1 HARBOR CENTER
SUITE 130
SUISUN CITY, CA 94585

PRELIMINARY PLANS SUBJECT TO REVISION

NOTE:

FOR ACCURATE RIGHT OF WAY DATA, CONTACT RIGHT OF WAY ENGINEERING AT THE DISTRICT OFFICE.

LINE TABLE

No.	LENGTH	BEARING
L5	184.94′	N 34°12′05" W
L7	104.83′	N 16°44′13" W
L8	103.53′	N 56°44′13" W
L9	58.09′	N 77°54′25" E
L10	35.19′	N 88°06′04" E
L11	155.26′	N 34°19′00" W
L12	120.00′	N 34°19′00" W
L13	177.73′	N 85°48′36" E
L14	140.87′	N 9°46′51" W
L15	100.77′	N 49°46′50" W
L16	139.51′	N 26°24′53" W

LINE TABLE

No.	LENGTH	BEARING
L17	212.37′	N 25°42′40" W
L18	138.87′	N 25°55′00" W
L19	173.60′	N 31°45′20" W
L20	50.00′	S 34°19′00" E
L21	53.17′	N 84°56′26" E
L22	53.58′	N 85°42′16" E
L23	55.59′	N 32°18′02" W
L24	1.83′	N 26°24′53" W
L25	49.45′	N 88°06′04" E
L26	52.37′	N 77°54′25" E
L27	176.14′	S 84°09′40" E
L28	300.45′	N 88°12′02" E

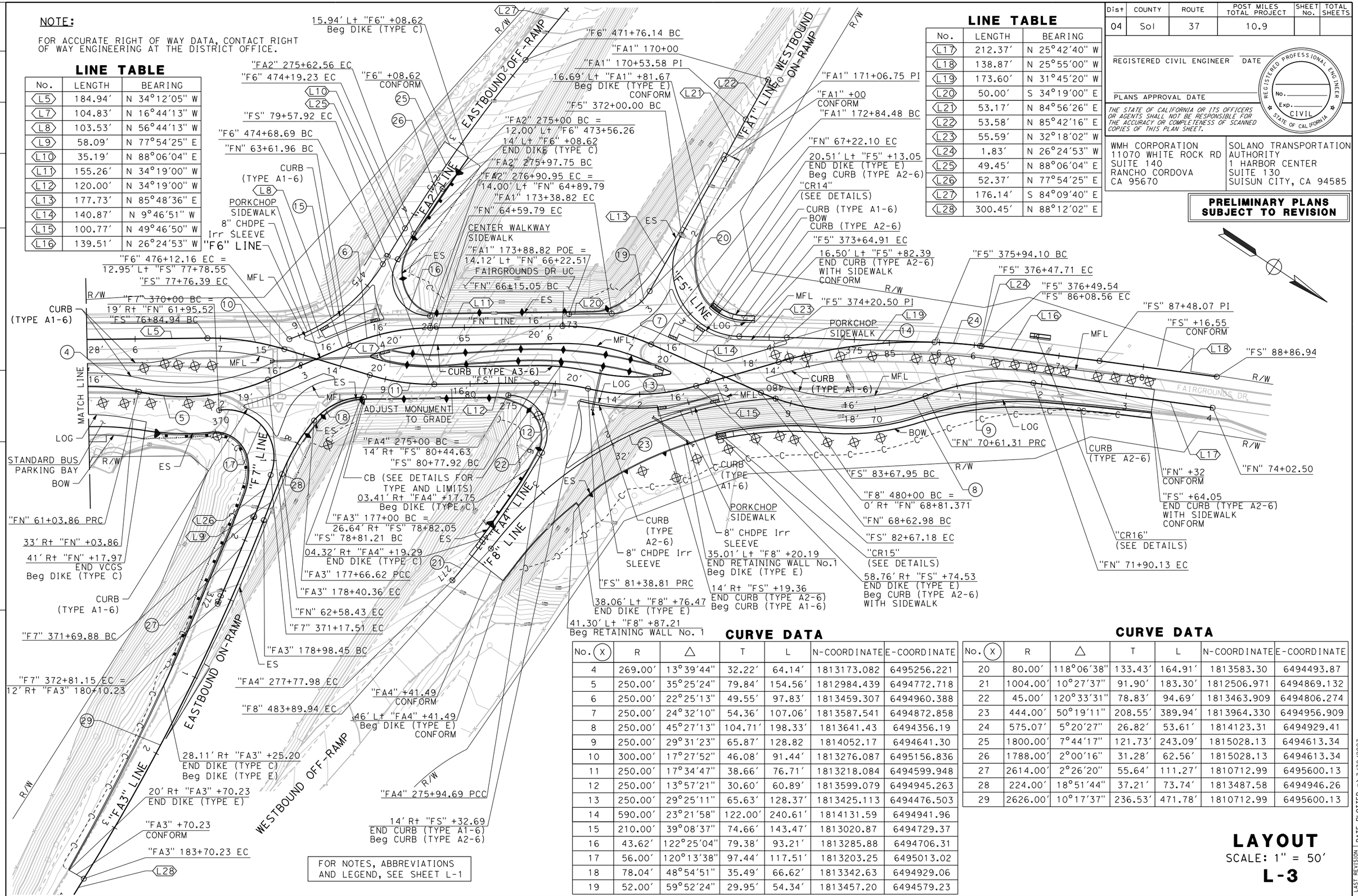

CURVE DATA

No. (X)	R	△	T	L	N-COORDINATE	E-COORDINATE
4	269.00′	13°39′44"	32.22′	64.14′	1813173.082	6495256.221
5	250.00′	35°25′24"	79.84′	154.56′	1812984.439	6494772.718
6	250.00′	22°25′13"	49.55′	97.83′	1813459.307	6494960.388
7	250.00′	24°32′10"	54.36′	107.06′	1813587.541	6494872.858
8	250.00′	45°27′13"	104.71′	198.33′	1813641.43	6494356.19
9	250.00′	29°31′23"	65.87′	128.82	1814052.17	6494641.30
10	300.00′	17°27′52"	46.08′	91.44′	1813276.087	6495156.836
11	250.00′	17°34′47"	38.66′	76.71′	1813218.084	6494599.948
12	250.00′	13°57′21"	30.60′	60.89′	1813599.079	6494945.263
13	250.00′	29°25′11"	65.63′	128.37′	1813425.113	6494476.503
14	590.00′	23°21′58"	122.00′	240.61′	1814131.59	6494941.96
15	210.00′	39°08′37"	74.66′	143.47′	1813020.87	6494729.37
16	43.62′	122°25′04"	79.38′	93.21′	1813285.88	6494706.31
17	56.00′	120°13′38"	97.44′	117.51′	1813203.25	6495013.02
18	78.04′	48°54′51"	35.49′	66.62′	1813342.63	6494929.06
19	52.00′	59°52′24"	29.95′	54.34′	1813457.20	6494579.23

CURVE DATA

No. (X)	R	△	T	L	N-COORDINATE	E-COORDINATE
20	80.00′	118°06′38"	133.43′	164.91′	1813583.30	6494493.87
21	1004.00′	10°27′37"	91.90′	183.30′	1812506.971	6494869.132
22	45.00′	120°33′31"	78.83′	94.69′	1813463.909	6494806.274
23	444.00′	50°19′11"	208.55′	389.94′	1813964.330	6494956.909
24	575.07′	5°20′27"	26.82′	53.61′	1814123.31	6494929.41
25	1800.00′	7°44′17"	121.73′	243.09′	1815028.13	6494613.34
26	1788.00′	2°00′16"	31.28′	62.56′	1815028.13	6494613.34
27	2614.00′	2°26′20"	55.64′	111.27′	1810712.99	6495600.13
28	224.00′	18°51′44"	37.21′	73.74′	1813487.58	6494946.26
29	2626.00′	10°17′37"	236.53′	471.78′	1810712.99	6495600.13

FOR NOTES, ABBREVIATIONS AND LEGEND, SEE SHEET L-1

LAYOUT

SCALE: 1" = 50′

L-3

	J.R.	02/15/22
REVISED BY		DATE REVISED
ARIANA CASTILLO	CARL GIBSON III	
CALCULATED-DESIGNED BY		CHECKED BY
SUPERVISOR	CARL GIBSON III	CONSULTANT FUNCTIONAL SUPERVISOR

STATE OF CALIFORNIA - DEPARTMENT OF TRANSPORTATION

Caltrans

X:\SR 37_FAIRGROUNDS DRIVE\000_CAD\Sheets\009-Layouts\044A4414ea003.dgn

LAST REVISION 00-00-00 | DATE PLOTTED => 3/30/2023 | TIME PLOTTED => 10:37:47 AM

BORDER LAST REVISED 7/2/2010 | USERNAME => acastillo | DGN FILE => 044A4414ea003.dgn | RELATIVE BORDER SCALE IS IN INCHES 0 1 2 3 | UNIT 0738 | PROJECT NUMBER & PHASE 04000205841

Dist	COUNTY	ROUTE	POST MILES TOTAL PROJECT	SHEET No.	TOTAL SHEETS
04	Sol	37	10.9		

REGISTERED CIVIL ENGINEER DATE

PLANS APPROVAL DATE

REGISTERED PROFESSIONAL ENGINEER No. Exp. CIVIL STATE OF CALIFORNIA

THE STATE OF CALIFORNIA OR ITS OFFICERS OR AGENTS SHALL NOT BE RESPONSIBLE FOR THE ACCURACY OR COMPLETENESS OF SCANNED COPIES OF THIS PLAN SHEET.

WMH CORPORATION
11070 WHITE ROCK RD
SUITE 140
RANCHO CORDOVA
CA 95670

SOLANO TRANSPORTATION AUTHORITY
1 HARBOR CENTER
SUITE 130
SUISUN CITY, CA 94585

PRELIMINARY PLANS SUBJECT TO REVISION

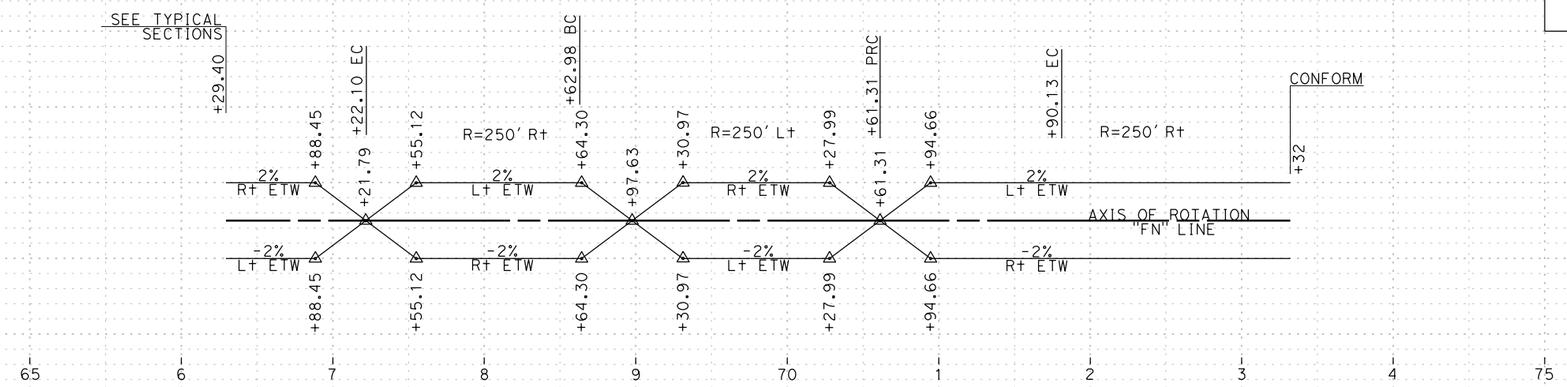

SUPERELEVATION DIAGRAM

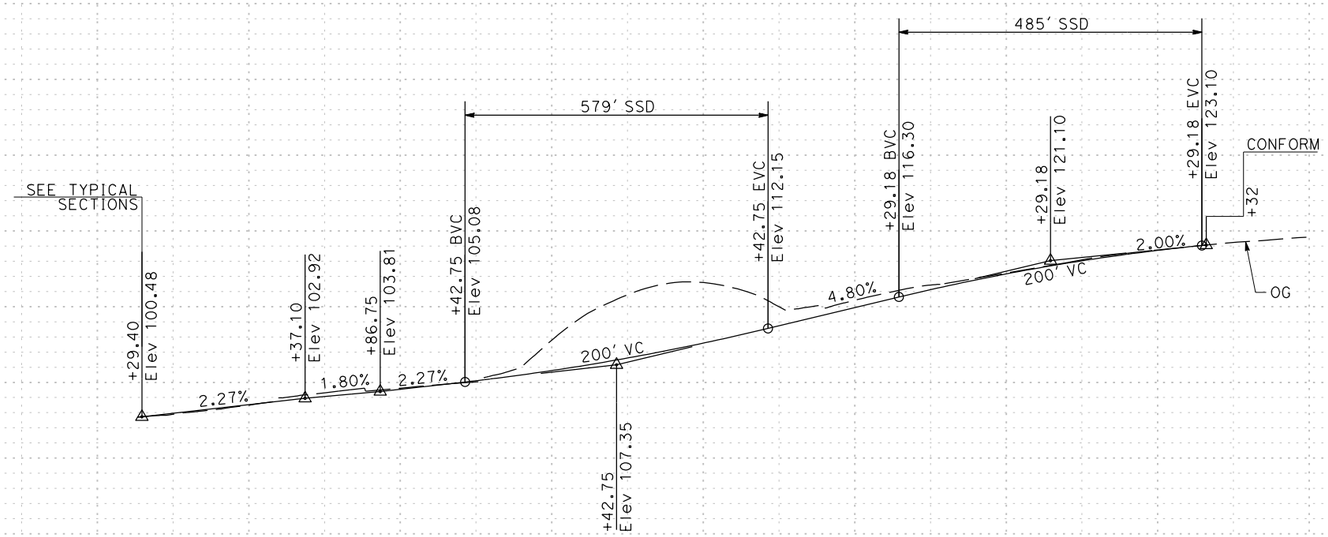

PROFILE "FN" LINE

PROFILE AND SUPERELEVATION DIAGRAM

SCALE: Horiz 1" = 50'
Vert 1" = 10'

PS-1

STATION	65	6	7	8	9	70	1	2	3	4	75	TOTAL
CY Exc												
CY Emb												

A.C.	02/15/22	4%	0%
REVISED BY	DATE REVISED		-4%
ARIANA CASTILLO	CARL GIBSON III		
CALCULATED-DESIGNED BY	CHECKED BY		
CONSULTANT FUNCTIONAL SUPERVISOR	CARL GIBSON III		

STATE OF CALIFORNIA - DEPARTMENT OF TRANSPORTATION

Caltrans

X:\SR 37_FAIRGROUNDS DRIVE\000_CAD\Sheets\011-Profile_Super\044A4414fb001.dgn

LAST REVISION 00-00-00 | DATE PLOTTED => 9/2/2022 | TIME PLOTTED => 1:00:42 PM

Dist	COUNTY	ROUTE	POST MILES TOTAL PROJECT	SHEET No.	TOTAL SHEETS
04	Sol	37	10.9		

REGISTERED CIVIL ENGINEER DATE

PLANS APPROVAL DATE

REGISTERED PROFESSIONAL ENGINEER No. Exp. CIVIL STATE OF CALIFORNIA

THE STATE OF CALIFORNIA OR ITS OFFICERS OR AGENTS SHALL NOT BE RESPONSIBLE FOR THE ACCURACY OR COMPLETENESS OF SCANNED COPIES OF THIS PLAN SHEET.

WMH CORPORATION
11070 WHITE ROCK RD
SUITE 140
RANCHO CORDOVA
CA 95670

SOLANO TRANSPORTATION AUTHORITY
1 HARBOR CENTER
SUITE 130
SUISUN CITY, CA 94585

PRELIMINARY PLANS SUBJECT TO REVISION

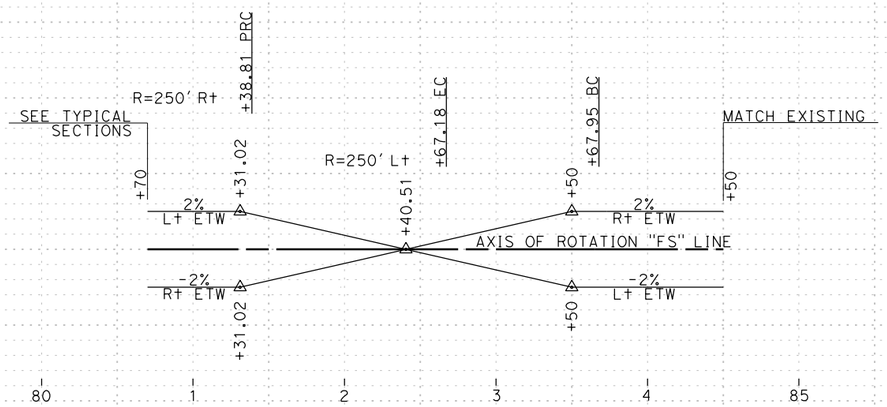

SUPERELEVATION DIAGRAM

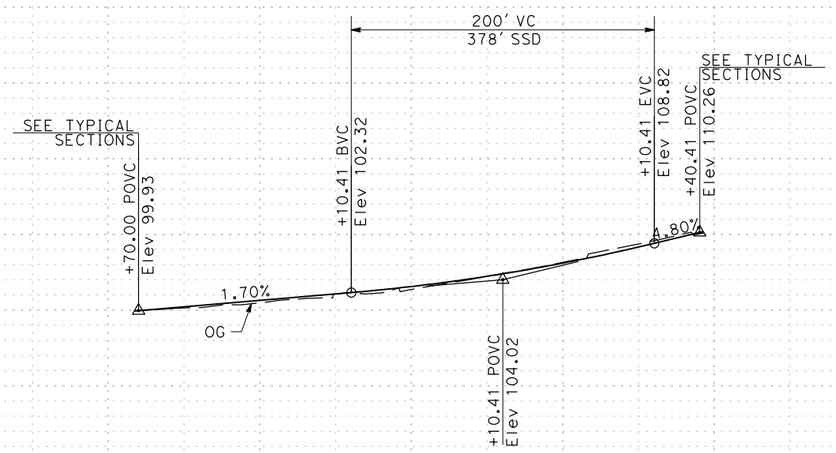

PROFILE "FS" LINE

PROFILE AND SUPERELEVATION DIAGRAM

SCALE: Horiz 1" = 50'
Vert 1" = 10'

PS-2

STATION 80 1 2 3 4 85 TOTAL

CY Exc
Emb

REVISED BY: ARIANA CASTILLO — DATE REVISED: 02/15/22 (A.C.)

CALCULATED-DESIGNED BY: CARL GIBSON III — CHECKED BY: CARL GIBSON III

CONSULTANT FUNCTIONAL SUPERVISOR

STATE OF CALIFORNIA - DEPARTMENT OF TRANSPORTATION

Caltrans

X:\SR 37_FAIRGROUNDS DRIVE\000_CAD\Sheets\011-Profile_Super\044A4414fb002.dgn

LAST REVISION 00-00-00 DATE PLOTTED => 9/2/2022 TIME PLOTTED => 1:00:49 PM

BORDER LAST REVISED 7/2/2010 | USERNAME => jvaldivia DGN FILE => 044A4414fb002.dgn | RELATIVE BORDER SCALE IS IN INCHES 0 1 2 3 | UNIT 0738 | PROJECT NUMBER & PHASE 04000205841

Dist	COUNTY	ROUTE	POST MILES TOTAL PROJECT	SHEET No.	TOTAL SHEETS
04	Sol	37	10.9		

REGISTERED CIVIL ENGINEER DATE

PLANS APPROVAL DATE

REGISTERED PROFESSIONAL ENGINEER No. Exp. CIVIL STATE OF CALIFORNIA

THE STATE OF CALIFORNIA OR ITS OFFICERS OR AGENTS SHALL NOT BE RESPONSIBLE FOR THE ACCURACY OR COMPLETENESS OF SCANNED COPIES OF THIS PLAN SHEET.

WMH CORPORATION
11070 WHITE ROCK RD
SUITE 140
RANCHO CORDOVA
CA 95670

SOLANO TRANSPORTATION AUTHORITY
1 HARBOR CENTER
SUITE 130
SUISUN CITY, CA 94585

PRELIMINARY PLANS SUBJECT TO REVISION

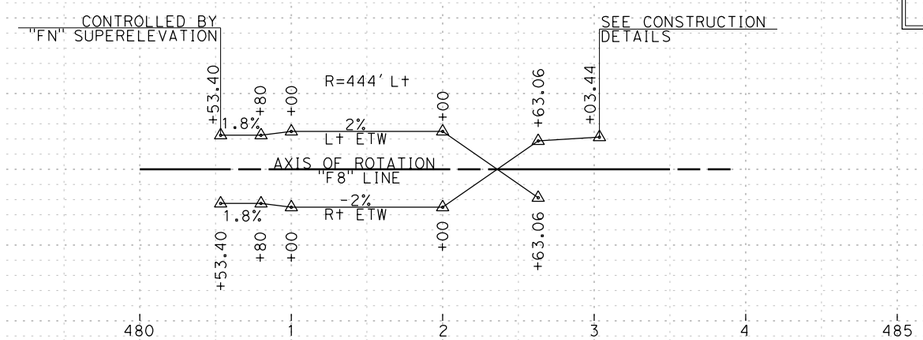

SUPERELEVATION DIAGRAM

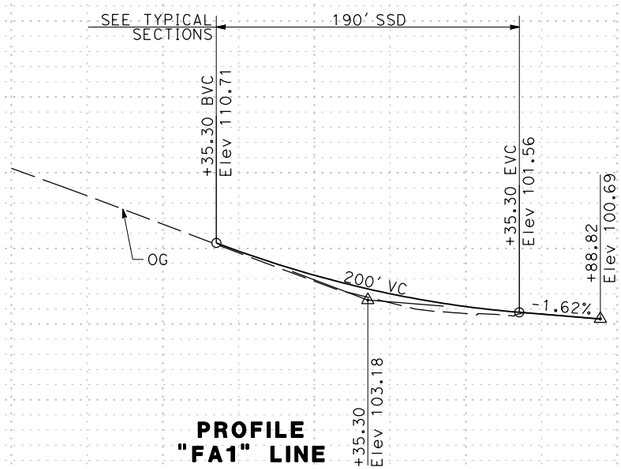

PROFILE "FA1" LINE

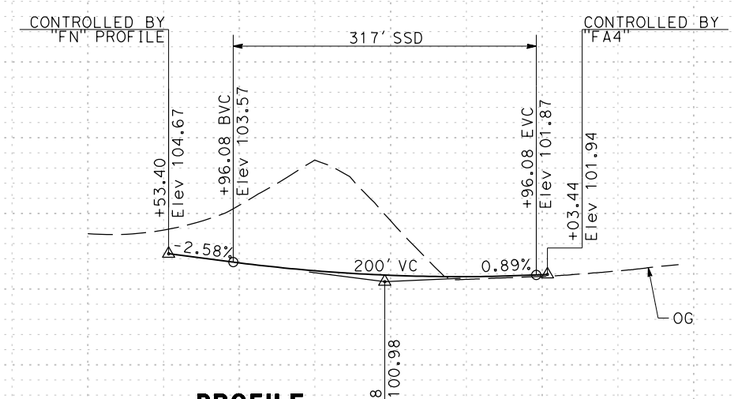

PROFILE "F8" LINE

PROFILE AND SUPERELEVATION DIAGRAM

SCALE: Horiz 1" = 50'
Vert 1" = 10'

PS-3

STATION	170	1	2	3	4	175	480	1	2	3	4	485	TOTAL
CY Exc													
CY Emb													

REVISED BY	DATE REVISED	CALCULATED-DESIGNED BY	CHECKED BY	CONSULTANT FUNCTIONAL SUPERVISOR
A.C.	02/15/22	ARIANA CASTILLO	CARL GIBSON III	CARL GIBSON III

STATE OF CALIFORNIA - DEPARTMENT OF TRANSPORTATION

Caltrans

X:\SR 37_FAIRGROUNDS DRIVE\000_CAD\Sheets\011-Profile_Super\044A4414fb003.dgn

LAST REVISION 00-00-00 | DATE PLOTTED => 9/2/2022 TIME PLOTTED => 1:00:52 PM

Dist	COUNTY	ROUTE	POST MILES TOTAL PROJECT	SHEET No.	TOTAL SHEETS
04	Sol	37	10.9		

REGISTERED CIVIL ENGINEER DATE

PLANS APPROVAL DATE

REGISTERED PROFESSIONAL ENGINEER No. Exp. CIVIL STATE OF CALIFORNIA

THE STATE OF CALIFORNIA OR ITS OFFICERS OR AGENTS SHALL NOT BE RESPONSIBLE FOR THE ACCURACY OR COMPLETENESS OF SCANNED COPIES OF THIS PLAN SHEET.

WMH CORPORATION
11070 WHITE ROCK RD
SUITE 140
RANCHO CORDOVA
CA 95670

SOLANO TRANSPORTATION AUTHORITY
1 HARBOR CENTER
SUITE 130
SUISUN CITY, CA 94585

PRELIMINARY PLANS SUBJECT TO REVISION

NOTE:

FOR ACCURATE RIGHT OF WAY DATA, CONTACT RIGHT OF WAY ENGINEERING AT THE DISTRICT OFFICE.

LEGEND:

- STAMPED CONCRETE & CONCRETE SURFACE TEXTURE (TYPE A)
- STAMPED CONCRETE & CONCRETE SURFACE TEXTURE (TYPE B)
- RHMA-G OVERLAY
- REMOVE BASE AND SURFACING
- COLD PLANE (0.15') & HMA OVERLAY (VARIABLE DEPTH)
- OBLITERATE SURFACING
- STANDARD BUS PARKING BAY
- FENCE

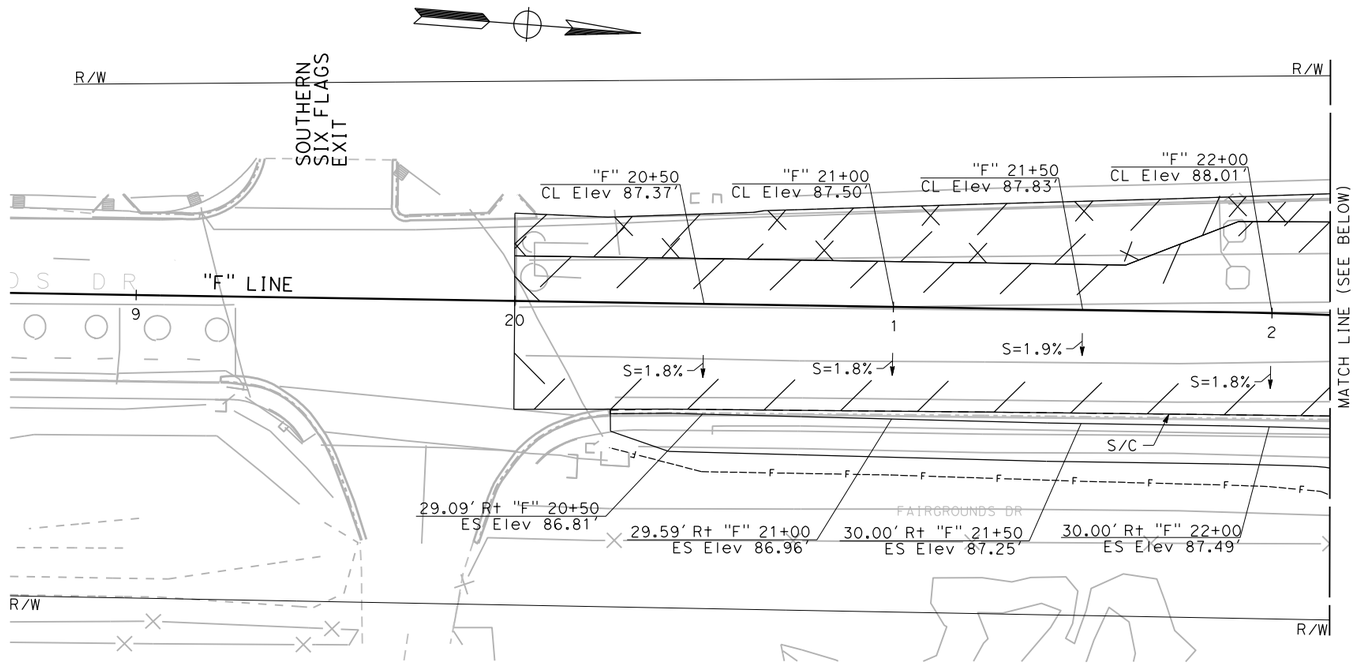

ABBREVIATIONS:

CL - CENTER LINE
LOG - LIP OF GUTTER
MFL - MEDIAN CURB FLOWLINE

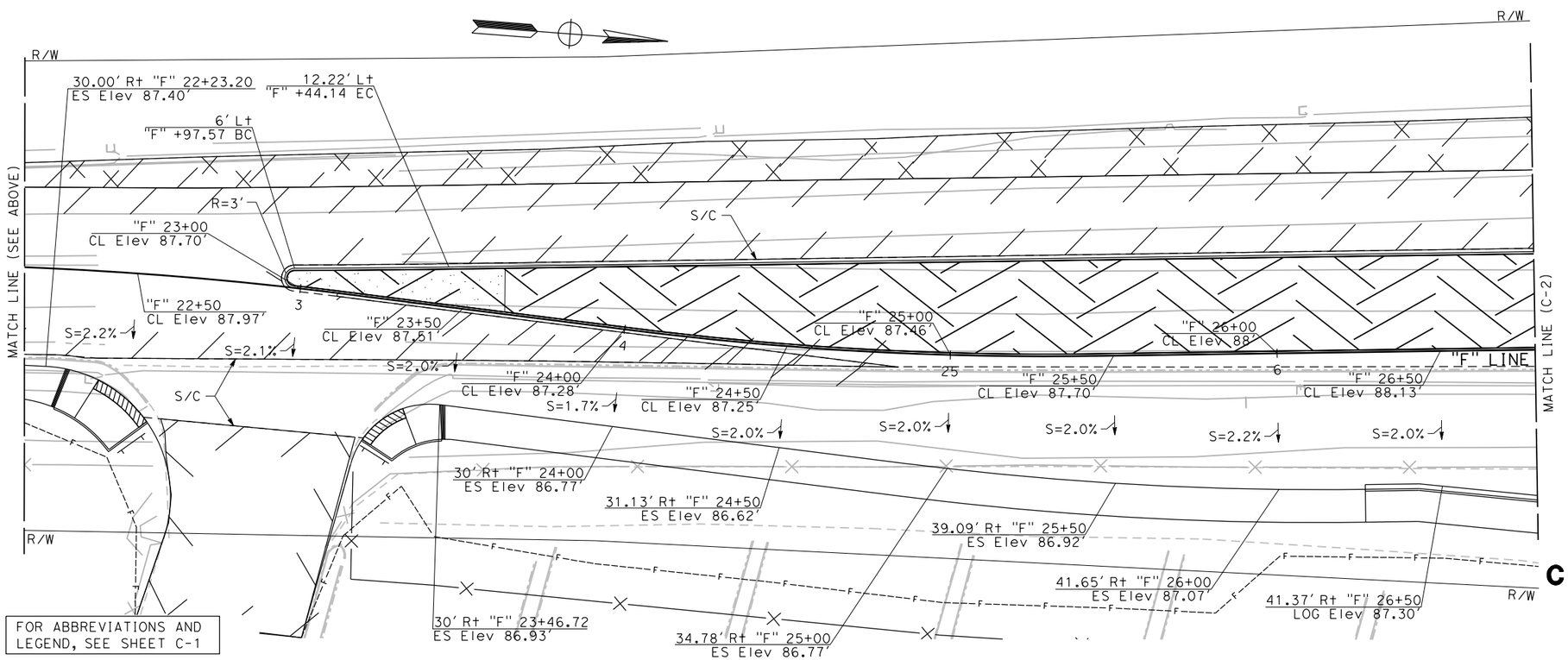

FOR ABBREVIATIONS AND LEGEND, SEE SHEET C-1

CONSTRUCTION DETAILS

PAVING DETAILS

SCALE: 1" = 20'

C-1

REVISED BY	DATE REVISED
J.V.	02/15/22

JAMEY VALDIVIA — CARL GIBSON III

CALCULATED-DESIGNED BY — CHECKED BY

CONSULTANT FUNCTIONAL SUPERVISOR — CARL GIBSON III

STATE OF CALIFORNIA - DEPARTMENT OF TRANSPORTATION

Caltrans

X:\SR 37_FAIRGROUNDS DRIVE\000_CAD\Sheets\013-Const_Details\044A4414ga001.dgn

LAST REVISION 00-00-00 — DATE PLOTTED => 9/2/2022 — TIME PLOTTED => 3:36:52 PM

Dist	COUNTY	ROUTE	POST MILES TOTAL PROJECT	SHEET No.	TOTAL SHEETS
04	Sol	37	10.9		

REGISTERED CIVIL ENGINEER DATE

PLANS APPROVAL DATE

REGISTERED PROFESSIONAL ENGINEER No. Exp. CIVIL STATE OF CALIFORNIA

THE STATE OF CALIFORNIA OR ITS OFFICERS OR AGENTS SHALL NOT BE RESPONSIBLE FOR THE ACCURACY OR COMPLETENESS OF SCANNED COPIES OF THIS PLAN SHEET.

WMH CORPORATION
11070 WHITE ROCK RD
SUITE 140
RANCHO CORDOVA
CA 95670

SOLANO TRANSPORTATION AUTHORITY
1 HARBOR CENTER
SUITE 130
SUISUN CITY, CA 94585

PRELIMINARY PLANS SUBJECT TO REVISION

NOTE:

FOR ACCURATE RIGHT OF WAY DATA, CONTACT RIGHT OF WAY ENGINEERING AT THE DISTRICT OFFICE.

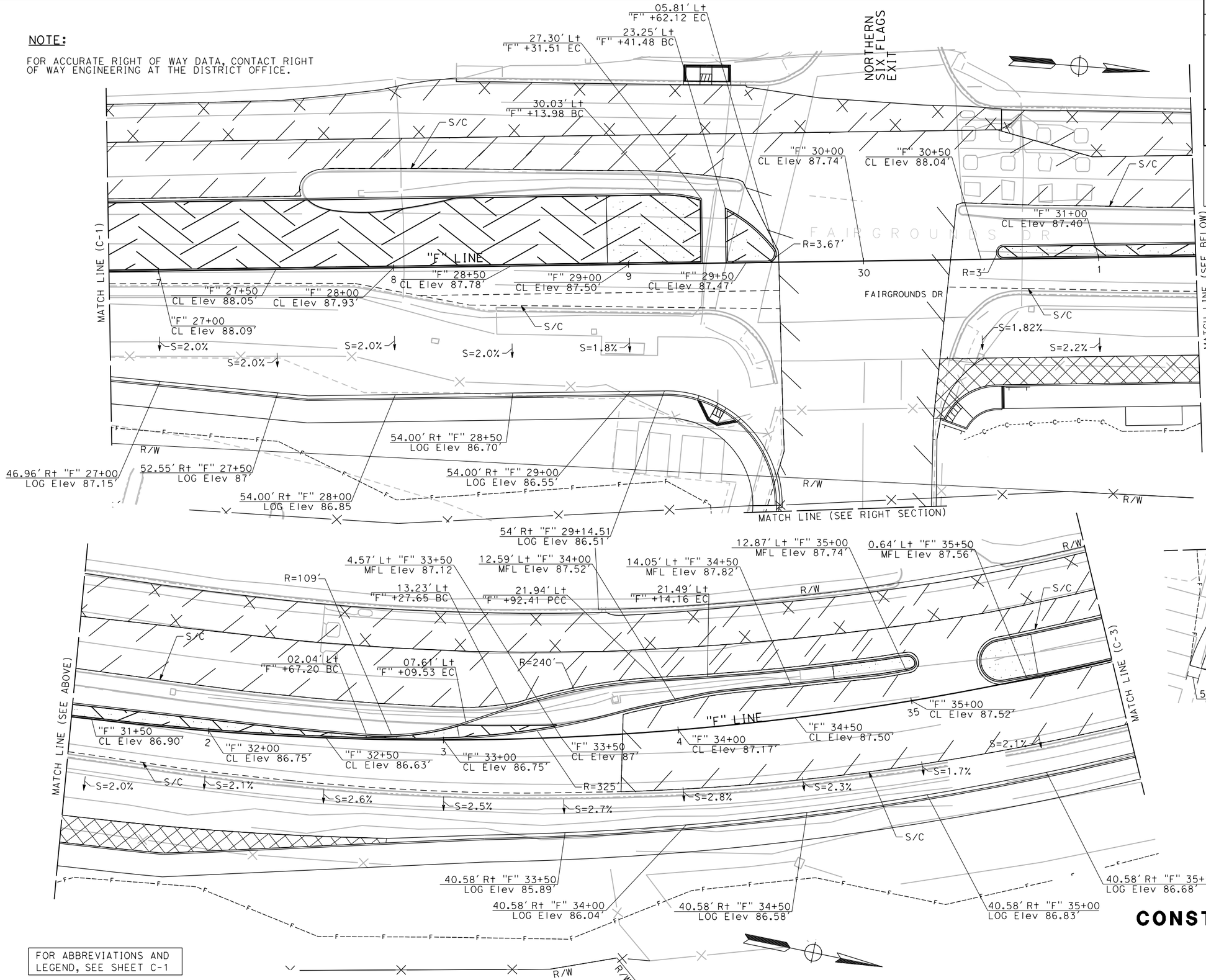

FOR ABBREVIATIONS AND LEGEND, SEE SHEET C-1

CONSTRUCTION DETAILS

PAVING DETAILS

SCALE: 1" = 20'

C-2

REVISED BY	DATE REVISED	CALCULATED-DESIGNED BY	CHECKED BY	SUPERVISOR	CONSULTANT FUNCTIONAL SUPERVISOR
J.V.	02/15/22	JAMEY VALDIVIA	CARL GIBSON III	CARL GIBSON III	CARL GIBSON III

STATE OF CALIFORNIA - DEPARTMENT OF TRANSPORTATION

Caltrans

X:\SR 37_FAIRGROUNDS DRIVE\000_CAD\Sheets\013-Const_Details\044A4414ga002.dgn

LAST REVISION 00-00-00 | DATE PLOTTED => 9/2/2022 | TIME PLOTTED => 3:37:00 PM

Dist	COUNTY	ROUTE	POST MILES TOTAL PROJECT	SHEET No.	TOTAL SHEETS
04	Sol	37	10.9		

REGISTERED CIVIL ENGINEER DATE

PLANS APPROVAL DATE

REGISTERED PROFESSIONAL ENGINEER No. Exp. CIVIL STATE OF CALIFORNIA

THE STATE OF CALIFORNIA OR ITS OFFICERS OR AGENTS SHALL NOT BE RESPONSIBLE FOR THE ACCURACY OR COMPLETENESS OF SCANNED COPIES OF THIS PLAN SHEET.

WMH CORPORATION
11070 WHITE ROCK RD
SUITE 140
RANCHO CORDOVA
CA 95670

SOLANO TRANSPORTATION AUTHORITY
1 HARBOR CENTER
SUITE 130
SUISUN CITY, CA 94585

PRELIMINARY PLANS SUBJECT TO REVISION

NOTE:

FOR ACCURATE RIGHT OF WAY DATA, CONTACT RIGHT OF WAY ENGINEERING AT THE DISTRICT OFFICE.

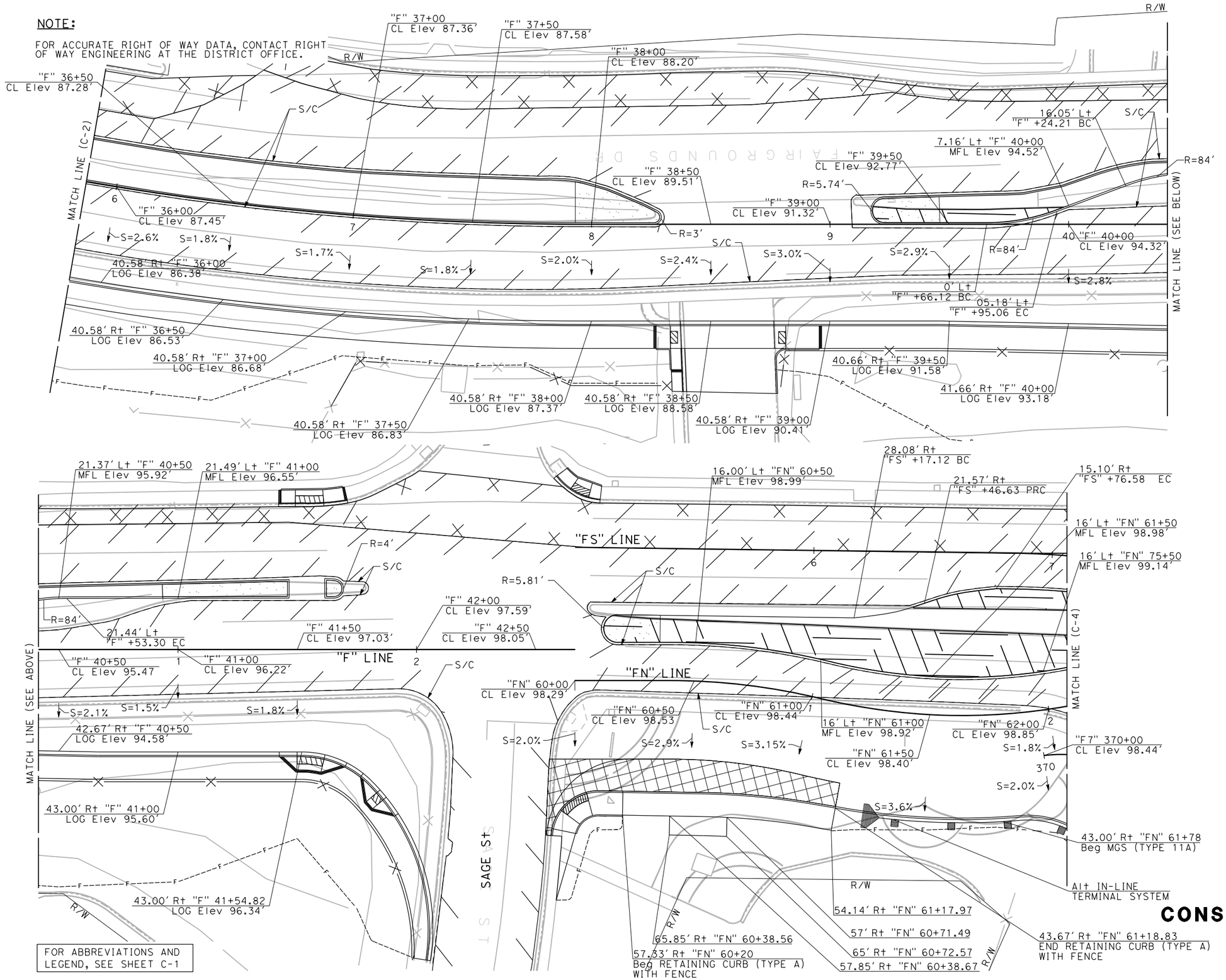

FOR ABBREVIATIONS AND LEGEND, SEE SHEET C-1

CONSTRUCTION DETAILS

PAVING DETAILS

SCALE: 1" = 20'

C-3

		J.V.	02/15/22
		REVISED BY	DATE REVISED
		JAMEY VALDIVIA	CARL GIBSON III
		CALCULATED-DESIGNED BY	CHECKED BY
		CONSULTANT FUNCTIONAL SUPERVISOR	CARL GIBSON III

STATE OF CALIFORNIA - DEPARTMENT OF TRANSPORTATION

Caltrans

X:\SR 37_FAIRGROUNDS DRIVE\000_CAD\Sheets\013-Const_Details\044A4414ga003.dgn

LAST REVISION 00-00-00 | DATE PLOTTED => 9/2/2022 | TIME PLOTTED => 3:37:03 PM

BORDER LAST REVISED 7/2/2010 | USERNAME => jvaldivia | DGN FILE => 044A4414ga003.dgn | RELATIVE BORDER SCALE IS IN INCHES 0 1 2 3 | UNIT 0738 | PROJECT NUMBER & PHASE 04000205841

Dist	COUNTY	ROUTE	POST MILES TOTAL PROJECT	SHEET No.	TOTAL SHEETS
04	Sol	37	10.9		

REGISTERED CIVIL ENGINEER DATE

PLANS APPROVAL DATE

REGISTERED PROFESSIONAL ENGINEER No. Exp. CIVIL STATE OF CALIFORNIA

THE STATE OF CALIFORNIA OR ITS OFFICERS OR AGENTS SHALL NOT BE RESPONSIBLE FOR THE ACCURACY OR COMPLETENESS OF SCANNED COPIES OF THIS PLAN SHEET.

WMH CORPORATION
11070 WHITE ROCK RD
SUITE 140
RANCHO CORDOVA
CA 95670

SOLANO TRANSPORTATION AUTHORITY
1 HARBOR CENTER
SUITE 130
SUISUN CITY, CA 94585

PRELIMINARY PLANS SUBJECT TO REVISION

NOTE:

FOR ACCURATE RIGHT OF WAY DATA, CONTACT RIGHT OF WAY ENGINEERING AT THE DISTRICT OFFICE.

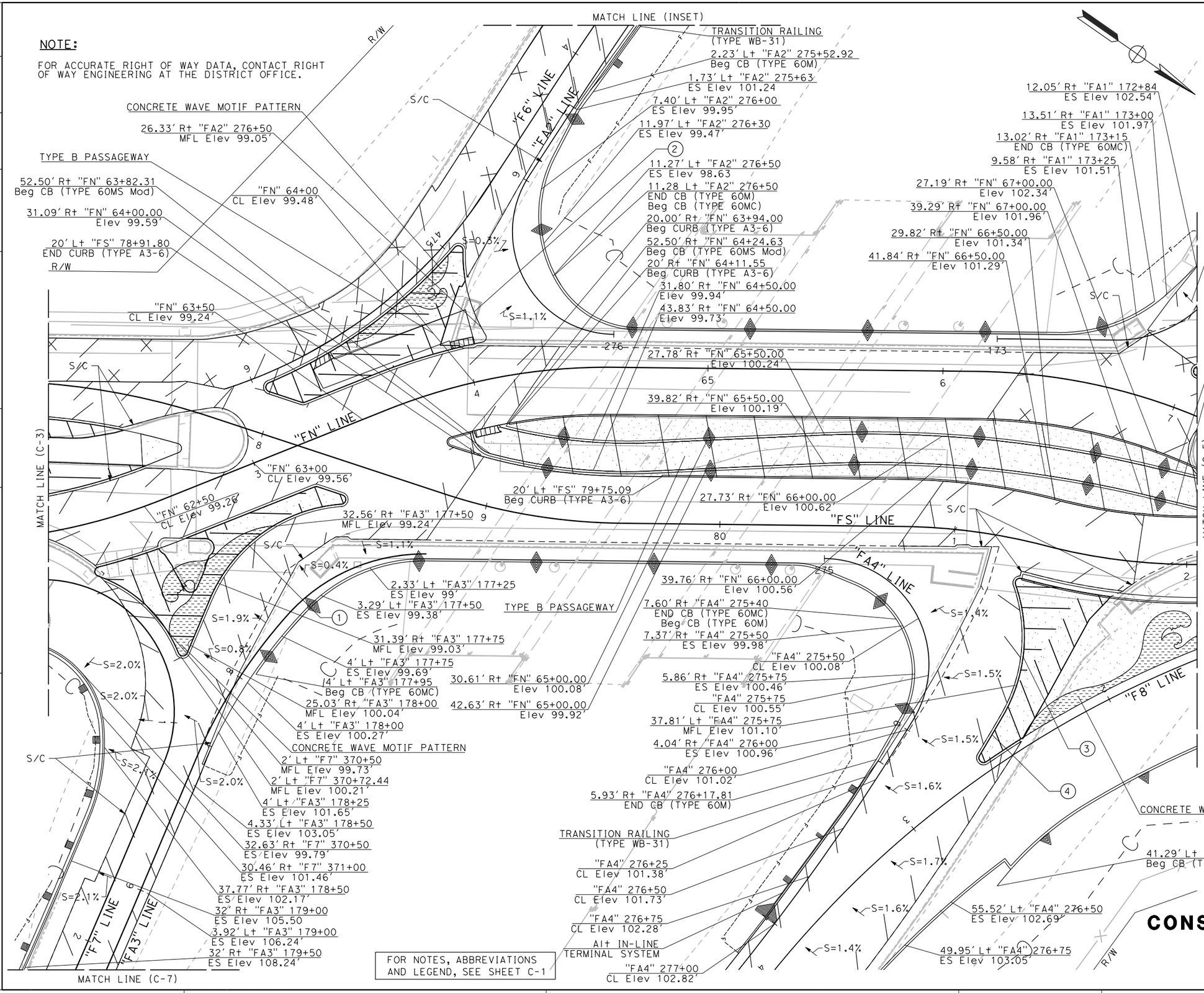

FOR NOTES, ABBREVIATIONS AND LEGEND, SEE SHEET C-1

CURVE DATA

No. (X)	R	△	T	L
1	66'	62°47'57"	40.28'	72.34'
2	66'	32°45'23"	19.39'	37.73'
3	67'	49°20'20"	30.77'	57.69'
4	1036'	1°5'37"	9.88'	19.77'

CONSTRUCTION DETAILS

PAVING DETAILS

SCALE: 1" = 20'

C-4

J.V.	02/15/22		
REVISED BY	DATE REVISED		
JAMEY VALDIVIA	CARL GIBSON III		
CALCULATED-DESIGNED BY	CHECKED BY		
SUPERVISOR	CONSULTANT FUNCTIONAL SUPERVISOR		
CARL GIBSON III			

STATE OF CALIFORNIA - DEPARTMENT OF TRANSPORTATION

Caltrans

X:\SR 37_FAIRGROUNDS DRIVE\000_CAD\Sheets\013-Const_Details\044A4414ga004.dgn

LAST REVISION 00-00-00 | DATE PLOTTED => 9/2/2022 | TIME PLOTTED => 3:37:10 PM

BORDER LAST REVISED 7/2/2010 | USERNAME => jvaldivia | DGN FILE => 044A4414ga004.dgn | RELATIVE BORDER SCALE IS IN INCHES 0 1 2 3 | UNIT 0738 | PROJECT NUMBER & PHASE 04000205841

Dist	COUNTY	ROUTE	POST MILES TOTAL PROJECT	SHEET No.	TOTAL SHEETS
04	Sol	37	10.9		

REGISTERED CIVIL ENGINEER DATE

PLANS APPROVAL DATE

REGISTERED PROFESSIONAL ENGINEER No. Exp. CIVIL STATE OF CALIFORNIA

THE STATE OF CALIFORNIA OR ITS OFFICERS OR AGENTS SHALL NOT BE RESPONSIBLE FOR THE ACCURACY OR COMPLETENESS OF SCANNED COPIES OF THIS PLAN SHEET.

WMH CORPORATION
11070 WHITE ROCK RD
SUITE 140
RANCHO CORDOVA
CA 95670

SOLANO TRANSPORTATION AUTHORITY
1 HARBOR CENTER
SUITE 130
SUISUN CITY, CA 94585

PRELIMINARY PLANS SUBJECT TO REVISION

NOTE:

FOR ACCURATE RIGHT OF WAY DATA, CONTACT RIGHT OF WAY ENGINEERING AT THE DISTRICT OFFICE.

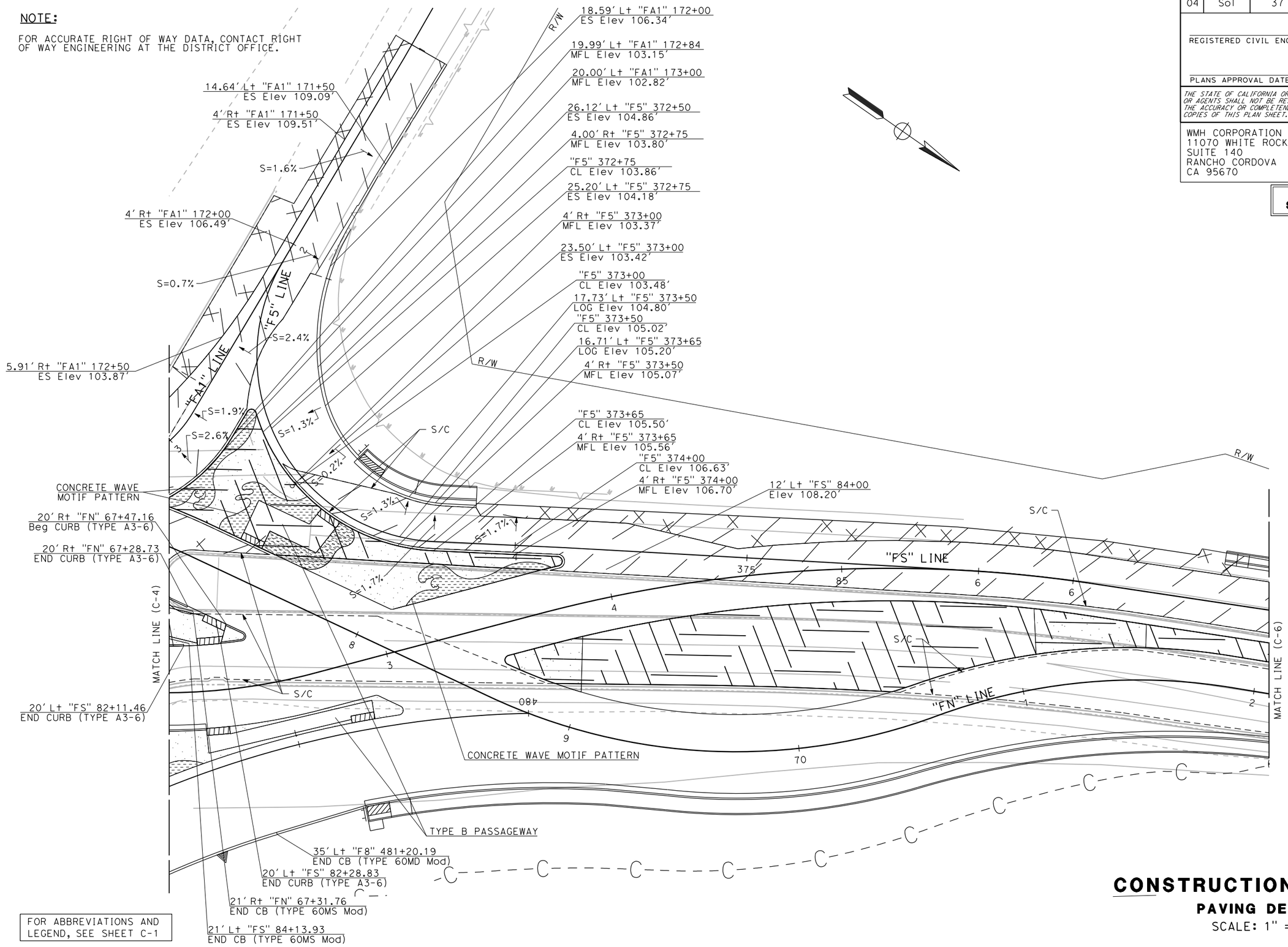

FOR ABBREVIATIONS AND LEGEND, SEE SHEET C-1

CONSTRUCTION DETAILS

PAVING DETAILS

SCALE: 1" = 20'

C-5

JAMEY VALDIVIA	J.V.		
CARL GIBSON III	02/15/22		
REVISED BY	DATE REVISED		
CALCULATED-DESIGNED BY	CHECKED BY		
CONSULTANT FUNCTIONAL SUPERVISOR			
CARL GIBSON III			

STATE OF CALIFORNIA - DEPARTMENT OF TRANSPORTATION

Caltrans

X:\SR 37_FAIRGROUNDS DRIVE\000_CAD\Sheets\013-Const_Details\044A4414ga005.dgn

LAST REVISION 00-00-00 | DATE PLOTTED => 9/2/2022 | TIME PLOTTED => 3:37:14 PM

BORDER LAST REVISED 7/2/2010 | USERNAME => jvaldivia | DGN FILE => 044A4414ga005.dgn | RELATIVE BORDER SCALE IS IN INCHES 0 1 2 3 | UNIT 0738 | PROJECT NUMBER & PHASE 04000205841

Dist	COUNTY	ROUTE	POST MILES TOTAL PROJECT	SHEET No.	TOTAL SHEETS
04	Sol	37	10.9		

REGISTERED CIVIL ENGINEER DATE

PLANS APPROVAL DATE

REGISTERED PROFESSIONAL ENGINEER No. Exp. CIVIL STATE OF CALIFORNIA

THE STATE OF CALIFORNIA OR ITS OFFICERS OR AGENTS SHALL NOT BE RESPONSIBLE FOR THE ACCURACY OR COMPLETENESS OF SCANNED COPIES OF THIS PLAN SHEET.

WMH CORPORATION
11070 WHITE ROCK RD
SUITE 140
RANCHO CORDOVA
CA 95670

SOLANO TRANSPORTATION AUTHORITY
1 HARBOR CENTER
SUITE 130
SUISUN CITY, CA 94585

PRELIMINARY PLANS SUBJECT TO REVISION

NOTE:

FOR ACCURATE RIGHT OF WAY DATA, CONTACT RIGHT OF WAY ENGINEERING AT THE DISTRICT OFFICE.

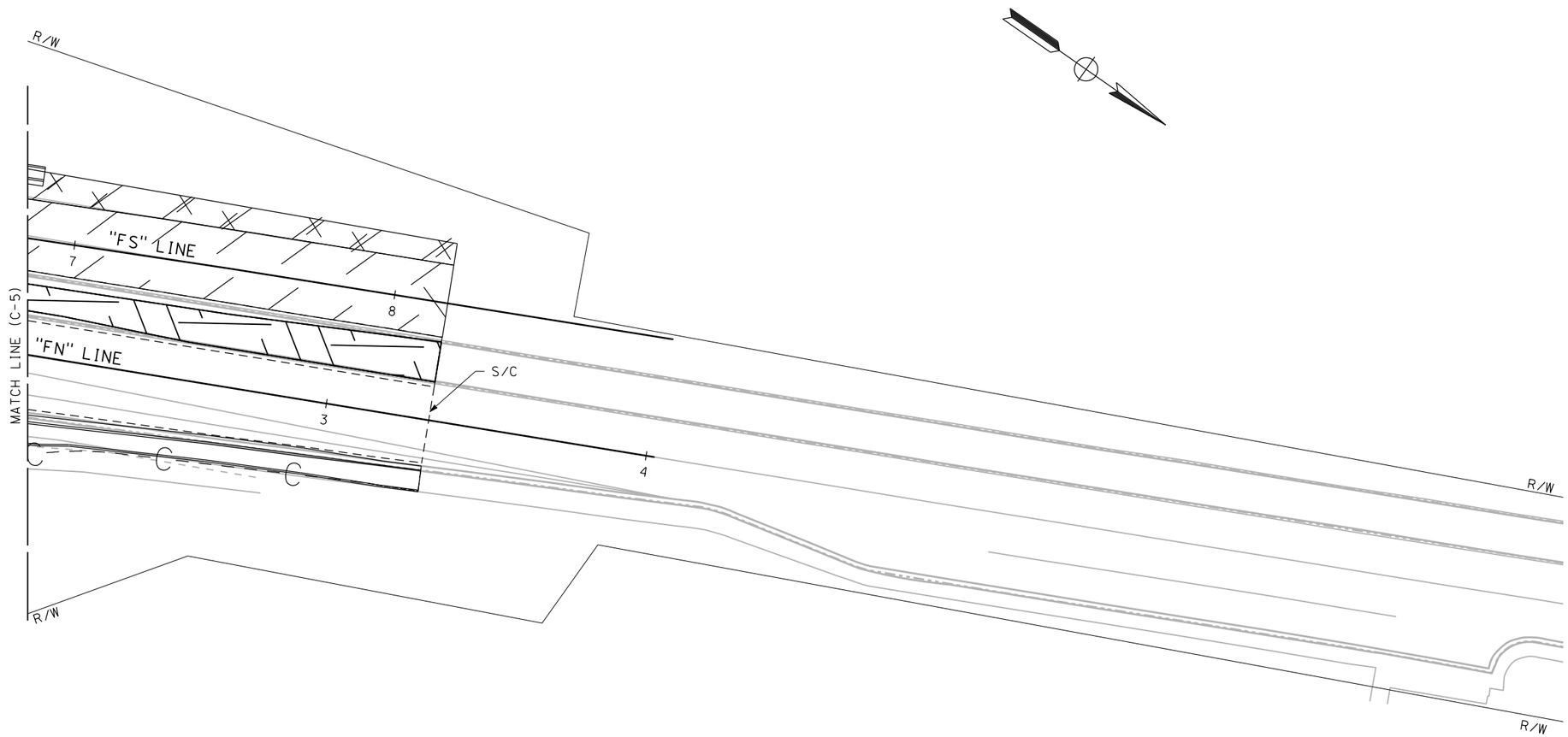

FOR ABBREVIATIONS AND LEGEND, SEE SHEET C-1

CONSTRUCTION DETAILS

PAVING DETAILS

SCALE: 1" = 20'

C-6

REVISED BY	DATE REVISED
J.V.	02/15/22

CALCULATED-DESIGNED BY	JAMEY VALDIVIA
CHECKED BY	CARL GIBSON III
CONSULTANT FUNCTIONAL SUPERVISOR	CARL GIBSON III

STATE OF CALIFORNIA - DEPARTMENT OF TRANSPORTATION

Caltrans

X:\SR 37_FAIRGROUNDS DRIVE\000_CAD\Sheets\013-Const_Details\044A4414ga006.dgn

LAST REVISION 00-00-00 | DATE PLOTTED => 9/2/2022 | TIME PLOTTED => 3:37:19 PM

Dist	COUNTY	ROUTE	POST MILES TOTAL PROJECT	SHEET No.	TOTAL SHEETS
04	Sol	37	10.9		

REGISTERED CIVIL ENGINEER DATE

PLANS APPROVAL DATE

REGISTERED PROFESSIONAL ENGINEER No. Exp. CIVIL STATE OF CALIFORNIA

THE STATE OF CALIFORNIA OR ITS OFFICERS OR AGENTS SHALL NOT BE RESPONSIBLE FOR THE ACCURACY OR COMPLETENESS OF SCANNED COPIES OF THIS PLAN SHEET.

WMH CORPORATION
11070 WHITE ROCK RD
SUITE 140
RANCHO CORDOVA
CA 95670

SOLANO TRANSPORTATION AUTHORITY
1 HARBOR CENTER
SUITE 130
SUISUN CITY, CA 94585

PRELIMINARY PLANS SUBJECT TO REVISION

NOTE:

FOR ACCURATE RIGHT OF WAY DATA, CONTACT RIGHT OF WAY ENGINEERING AT THE DISTRICT OFFICE.

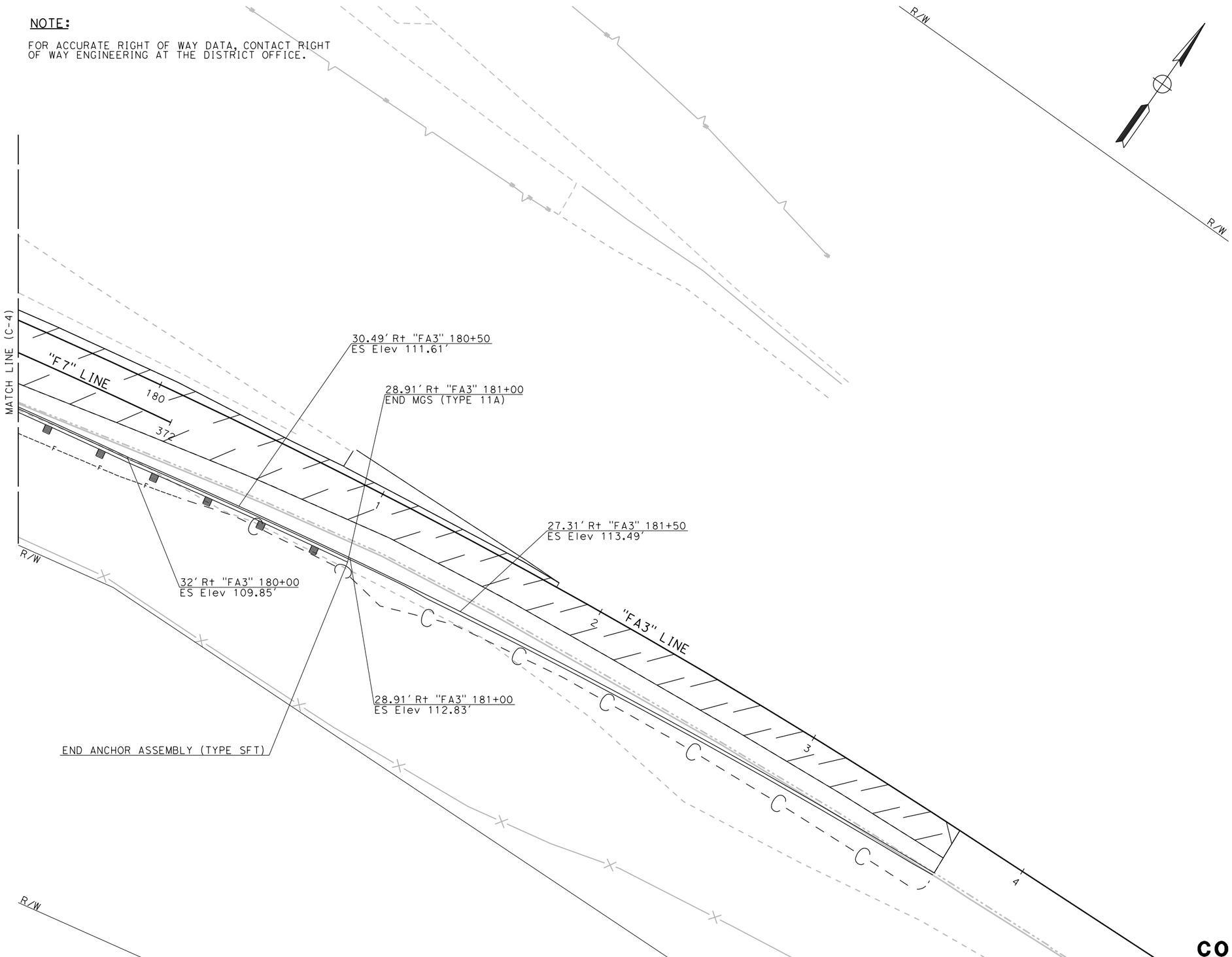

FOR NOTES, ABBREVIATIONS AND LEGEND, SEE SHEET C-1

CONSTRUCTION DETAILS

PAVING DETAILS

SCALE: 1" = 20'

C-7

REVISED BY	DATE REVISED
J.V.	02/15/22

JAMEY VALDIVIA — CALCULATED-DESIGNED BY
CARL GIBSON III — CHECKED BY
CARL GIBSON III — CONSULTANT FUNCTIONAL SUPERVISOR

STATE OF CALIFORNIA - DEPARTMENT OF TRANSPORTATION

X:\SR 37_FAIRGROUNDS DRIVE\000_CAD\Sheets\013-Const_Details\044A4414ga007.dgn

LAST REVISION 00-00-00 | DATE PLOTTED => 9/2/2022 | TIME PLOTTED => 3:37:50 PM

BORDER LAST REVISED 7/2/2010 | USERNAME => jvaldivia | DGN FILE => 044A4414ga007.dgn | RELATIVE BORDER SCALE IS IN INCHES 0 1 2 3 | UNIT 0738 | PROJECT NUMBER & PHASE 04000205841

Dist	COUNTY	ROUTE	POST MILES TOTAL PROJECT	SHEET No.	TOTAL SHEETS
04	Sol	37	10.9		

REGISTERED CIVIL ENGINEER DATE

PLANS APPROVAL DATE

REGISTERED PROFESSIONAL ENGINEER No. Exp. CIVIL STATE OF CALIFORNIA

THE STATE OF CALIFORNIA OR ITS OFFICERS OR AGENTS SHALL NOT BE RESPONSIBLE FOR THE ACCURACY OR COMPLETENESS OF SCANNED COPIES OF THIS PLAN SHEET.

WMH CORPORATION
11070 WHITE ROCK RD
SUITE 140
RANCHO CORDOVA
CA 95670

SOLANO TRANSPORTATION AUTHORITY
1 HARBOR CENTER
SUITE 130
SUISUN CITY, CA 94585

PRELIMINARY PLANS SUBJECT TO REVISION

NOTE:

1. FOR ACCURATE RIGHT OF WAY DATA, CONTACT RIGHT OF WAY ENGINEERING AT THE DISTRICT OFFICE.

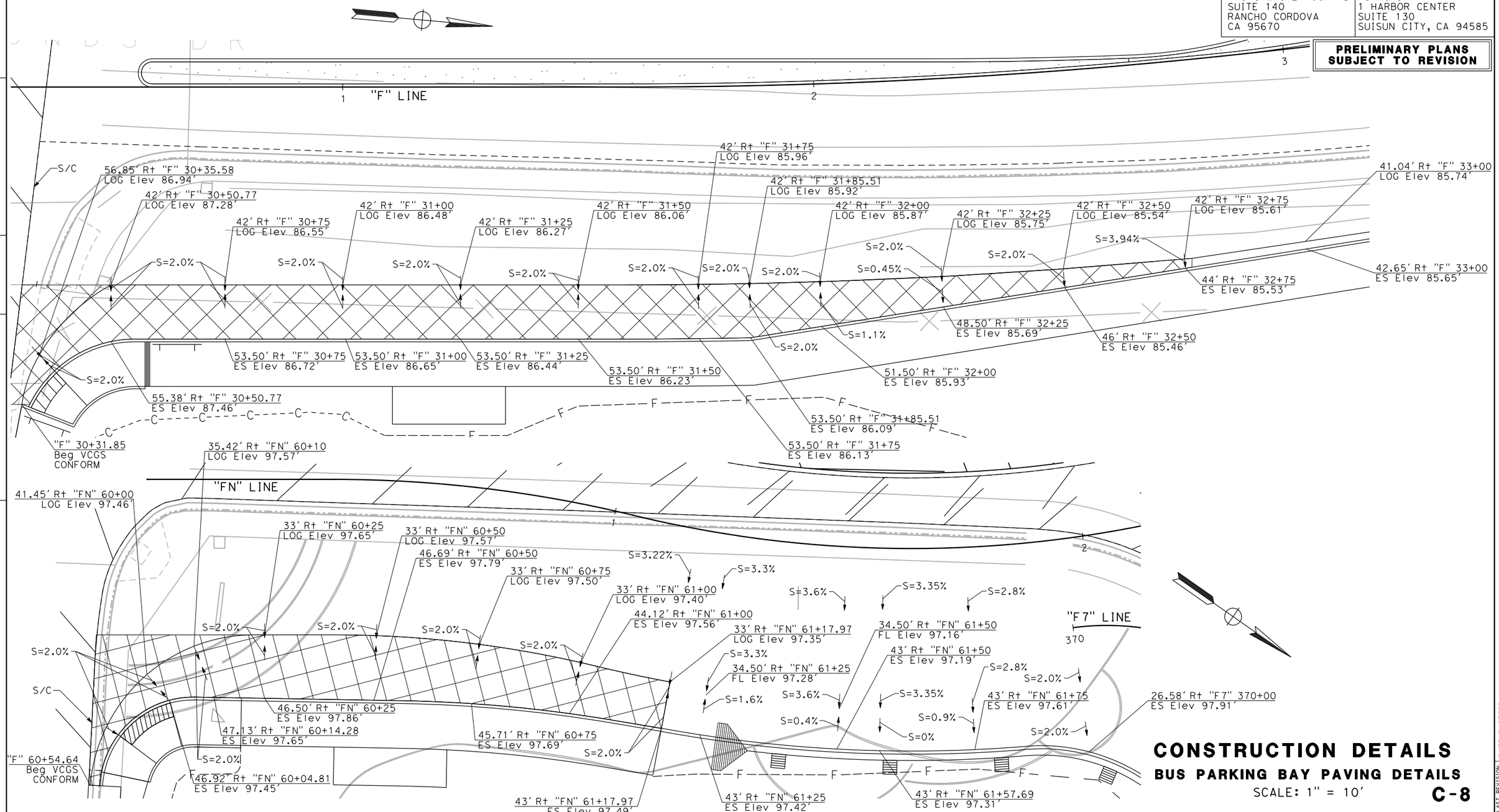

CONSTRUCTION DETAILS

BUS PARKING BAY PAVING DETAILS

SCALE: 1" = 10'

C-8

REVISED BY	DATE REVISED
J.V.	02/15/22

JAMEY VALDIVIA — CARL GIBSON III — CALCULATED-DESIGNED BY — CHECKED BY

CARL GIBSON III — CONSULTANT FUNCTIONAL SUPERVISOR

STATE OF CALIFORNIA - DEPARTMENT OF TRANSPORTATION — Caltrans

X:\SR 37_FAIRGROUNDS DRIVE\000_CAD\Sheets\013-Const_Details\044A4414ga008.dgn

LAST REVISION 00-00-00 — DATE PLOTTED => 9/2/2022 — TIME PLOTTED => 3:38:01 PM

BORDER LAST REVISED 7/2/2010 | USERNAME => jvaldivia | DGN FILE => 044A4414ga008.dgn | RELATIVE BORDER SCALE IS IN INCHES 0 1 2 3 | UNIT 0738 | PROJECT NUMBER & PHASE 04000205841

Dist	COUNTY	ROUTE	POST MILES TOTAL PROJECT	SHEET No.	TOTAL SHEETS
04	Sol	37	10.9		

REGISTERED CIVIL ENGINEER DATE

PLANS APPROVAL DATE

REGISTERED PROFESSIONAL ENGINEER No. Exp. CIVIL STATE OF CALIFORNIA

THE STATE OF CALIFORNIA OR ITS OFFICERS OR AGENTS SHALL NOT BE RESPONSIBLE FOR THE ACCURACY OR COMPLETENESS OF SCANNED COPIES OF THIS PLAN SHEET.

WMH CORPORATION
11070 WHITE ROCK RD
SUITE 140
RANCHO CORDOVA
CA 95670

SOLANO TRANSPORTATION AUTHORITY
1 HARBOR CENTER
SUITE 130
SUISUN CITY, CA 94585

PRELIMINARY PLANS SUBJECT TO REVISION

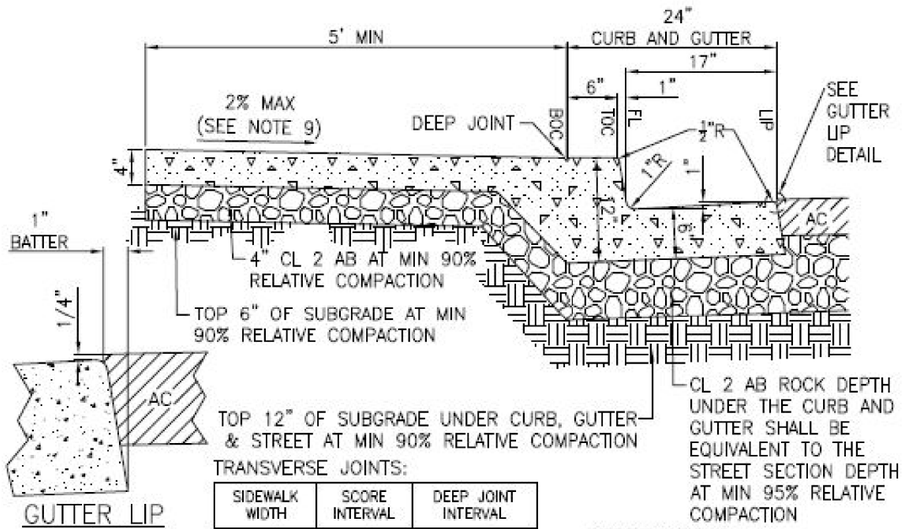

GUTTER LIP DETAIL

TRANSVERSE JOINTS:

SIDEWALK WIDTH	SCORE INTERVAL	DEEP JOINT INTERVAL
5'	5'	10'
7'	5'	10'
9.5'	5'*	10'

* SHALL INCLUDE SCORE LINES PERPENDICULAR AND PARALLEL TO TOC.

ABBREVIATIONS
BOC BACK OF CURB
FL FLOWLINE
LIP LIP OF GUTTER
TOC TOP FACE OF CURB

NOTES:

1. VERTICAL CURB, GUTTER AND SIDEWALK SHALL BE USED ON ALL STREETS IN COMMERCIAL AND INDUSTRIAL DEVELOPMENTS. VERTICAL CURB AND GUTTER SHALL BE USED ON RESIDENTIAL DEVELOPMENTS WHERE THE LOW PROFILE CURB, GUTTER AND SIDEWALK IS NOT REQUIRED PER STANDARD DRAWING 3-12A UNLESS OTHERWISE APRROVED BY THE CITY ENGINEER / DIRECTOR OF PUBLIC WORKS.
2. SCORE LINES SHALL BE 1/4" DEEP.
3. DEEP JOINTS SHALL BE 1" MIN DEEP EXTENDING THROUGH CURB AND GUTTER.
4. DEEP JOINTS SHALL ALSO BE LOCATED AT CURB RETURNS, STREET LIGHTS, EACH EDGE OF UTILITY BOXES AND AT EACH END OF DRIVEWAYS AND CENTER OF DRIVEWAY.
5. ANY CURB, GUTTER AND SIDEWALK AREA TO BE REPLACED SHALL BE DOWELLED TO EXISTING CURB WITH #4 REBAR AT 2' O.C., MIN 9" LONG WITH 3" MIN EMBEDMENT.
6. IF CURB, GUTTER AND SIDEWALK ARE NOT POURED MONOLITHICALLY, SIDEWALK IS TO BE DOWELLED TO CURB WITH #4 REBAR AT 2' O.C., MIN 9" LONG WITH 3" MIN EMBEDMENT.
7. REMOVAL OF EXISTING SIDEWALK, CURB OR GUTTER TO BE MADE TO NEAREST SCORE LINE OR DEEP JOINT.
8. FOR SUPERELEVATED STREET SECTION, CURB AND GUTTER MAY REQUIRE MODIFICATION.
9. A PLANTER STRIP AREA MAY BE LOCATED BETWEEN THE CURB AND THE SIDEWALK. THE MINIMUM WIDTH OF THE SIDEWALK SHALL BE 5 FT. THE MINIMUM WIDTH OF THE PLANTER AREA SHALL BE 6' AND SLOPE 2% TOWARD THE STREET. THE PLANTER AREA SHALL BE MAINTAINED BY A LIGHTING AND LANDSCAPE DISTRICT OR HOME OWNER'S ASSOCIATION.
10. PORTLAND CEMENT CONCRETE SHALL CONFORM TO "MINOR CONCRETE" OF THE CALTRANS STANDARD SPECIFICATIONS EXCEPT THAT THE CEMENT CONTENT SHALL BE A MINIMUM OF 6 SACKS OF CEMENT PER CUBIC YARD OF CONCRETE.

Vallejo

CITY OF VALLEJO STANDARD DETAIL

STANDARD VERTICAL CURB, GUTTER, & SIDEWALK

APPROVED BY: DIRECTOR OF PUBLIC WORKS

DRAWING NO: 3-10
SCALE: NONE
DATE: 09/13/11

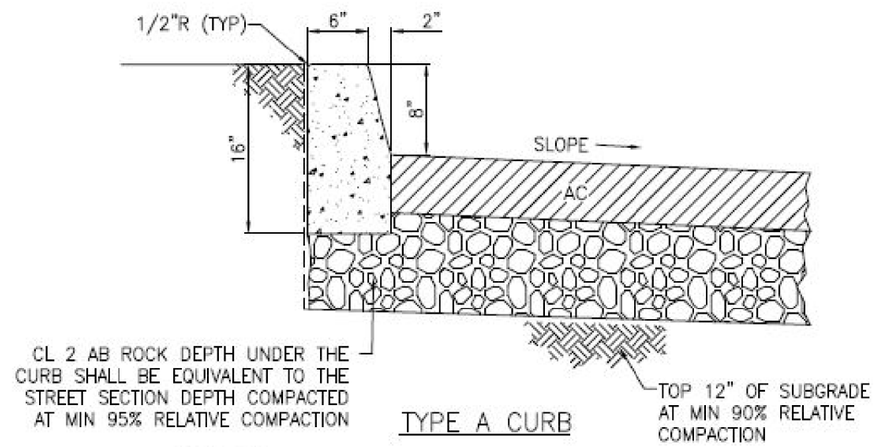

TYPE A CURB

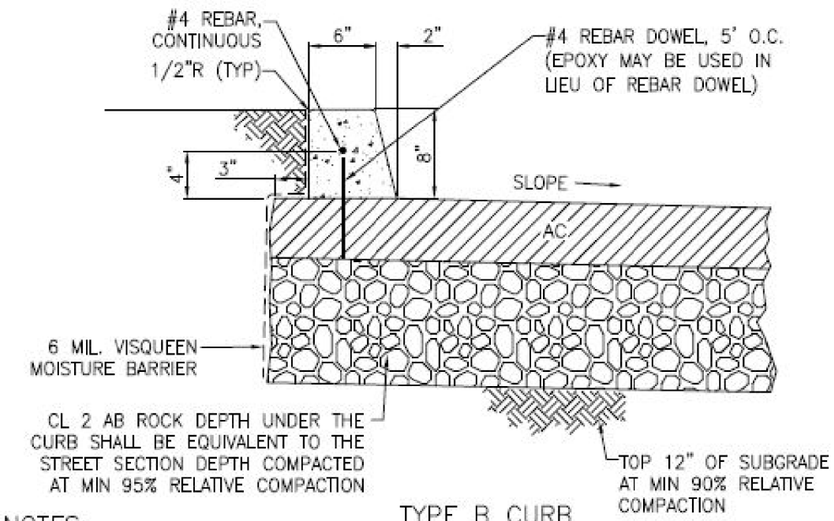

TYPE B CURB

NOTES:

1. SUBDRAINS MAY BE REQUIRED IN LANDSCAPED MEDIANS.
2. PORTLAND CEMENT CONCRETE SHALL CONFORM TO "MINOR CONCRETE" OF THE CALTRANS STANDARD SPECIFICATIONS EXCEPT THAT THE CEMENT CONTENT SHALL BE A MINIMUM OF 6 SACKS OF CEMENT PER CUBIC YARD OF CONCRETE.

Vallejo

CITY OF VALLEJO STANDARD DETAIL

STANDARD MEDIAN CURB

APPROVED BY: DIRECTOR OF PUBLIC WORKS

DRAWING NO: 3-18
SCALE: NONE
DATE: 09/13/11

CONSTRUCTION DETAILS

CURB AND GUTTER

NO SCALE

C-9

REVISED BY	DATE REVISED
J.V.	02/15/22

JAMEY VALDIVIA — CARL GIBSON III — CALCULATED-DESIGNED BY — CHECKED BY — CARL GIBSON III — CONSULTANT FUNCTIONAL SUPERVISOR

STATE OF CALIFORNIA - DEPARTMENT OF TRANSPORTATION — Caltrans

X:\SR 37_FAIRGROUNDS DRIVE\000_CAD\Sheets\013-Const_Details\044A4414ga009.dgn

LAST REVISION 00-00-00 — DATE PLOTTED => 9/2/2022 — TIME PLOTTED => 3:38:05 PM

BORDER LAST REVISED 7/2/2010 — USERNAME => jvaldivia — DGN FILE => 044A4414ga009.dgn — RELATIVE BORDER SCALE IS IN INCHES 0 1 2 3 — UNIT 0738 — PROJECT NUMBER & PHASE 04000205841

Dist	COUNTY	ROUTE	POST MILES TOTAL PROJECT	SHEET No.	TOTAL SHEETS
04	Sol	37	10.9		

REGISTERED CIVIL ENGINEER DATE

PLANS APPROVAL DATE

REGISTERED PROFESSIONAL ENGINEER No. Exp. CIVIL STATE OF CALIFORNIA

THE STATE OF CALIFORNIA OR ITS OFFICERS OR AGENTS SHALL NOT BE RESPONSIBLE FOR THE ACCURACY OR COMPLETENESS OF SCANNED COPIES OF THIS PLAN SHEET.

WMH CORPORATION
11070 WHITE ROCK RD
SUITE 140
RANCHO CORDOVA
CA 95670

SOLANO TRANSPORTATION AUTHORITY
1 HARBOR CENTER
SUITE 130
SUISUN CITY, CA 94585

PRELIMINARY PLANS SUBJECT TO REVISION

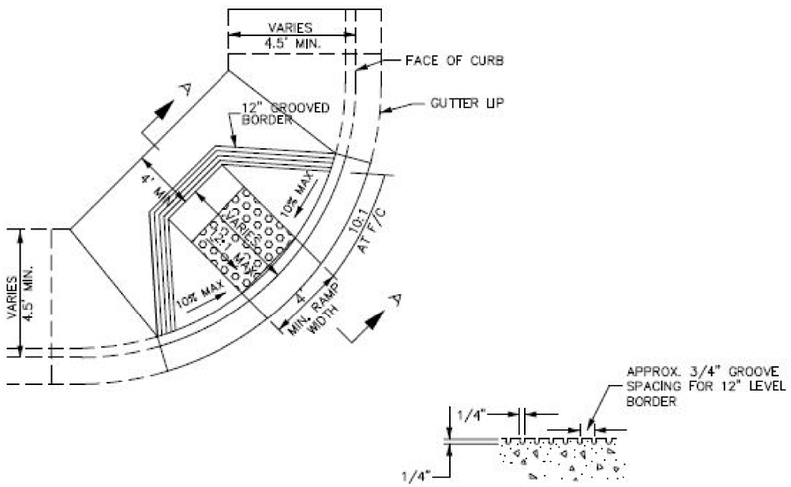

GROOVING DETAIL

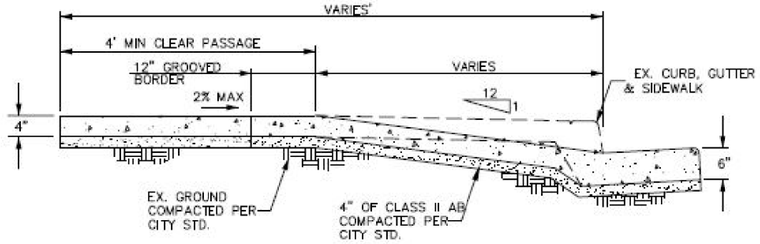

SECTION A–A

NOTE: TYPE 1 CURB RAMP SHALL CONFORM TO CALTRANS TYPE A CURB RAMP, A88A

CITY OF VALLEJO STANDARD DETAIL	APPROVED BY:	DRAWING NO: 3–22
STANDARD TYPE 1 CURB RAMP DETAIL	DIRECTOR OF PUBLIC WORKS	SCALE: NONE
		DATE: 09/13/11

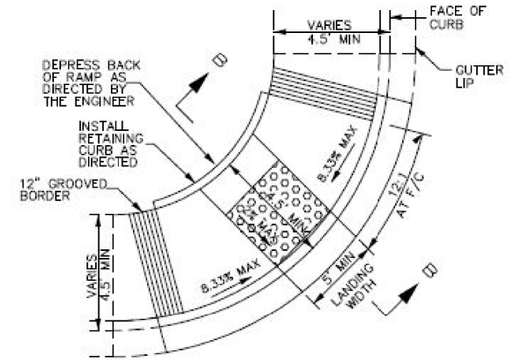

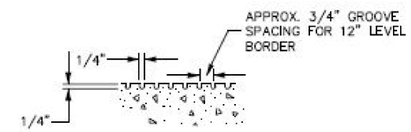

GROOVING DETAIL

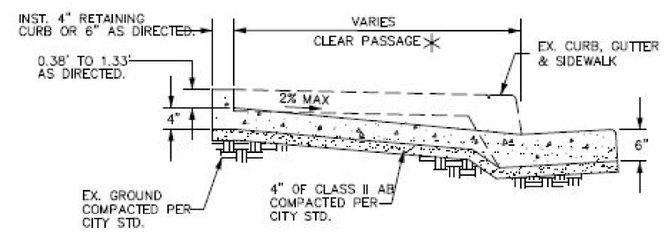

SECTION B–B

NOTE: TYPE 2 CURB RAMP SHALL CONFORM TO CALTRANS TYPE C CURB RAMP, A88A

CITY OF VALLEJO STANDARD DETAIL	APPROVED BY:	DRAWING NO: 3–23
STANDARD TYPE 2 CURB RAMP DETAIL	DIRECTOR OF PUBLIC WORKS	SCALE: NONE
		DATE: 09/13/11

CONSTRUCTION DETAILS

CURB AND GUTTER

NO SCALE

C-10

REVISED BY	DATE REVISED
J.V.	02/15/22

JAMEY VALDIVIA
CARL GIBSON III
CALCULATED-DESIGNED BY
CHECKED BY
CARL GIBSON III
CONSULTANT FUNCTIONAL SUPERVISOR

STATE OF CALIFORNIA - DEPARTMENT OF TRANSPORTATION

X:\SR 37_FAIRGROUNDS DRIVE\000_CAD\Sheets\013-Const_Details\044A4414ga010.dgn

LAST REVISION 00-00-00 | DATE PLOTTED => 9/2/2022 | TIME PLOTTED => 3:38:15 PM

Dist	COUNTY	ROUTE	POST MILES TOTAL PROJECT	SHEET No.	TOTAL SHEETS
04	Sol	37	10.9		

REGISTERED CIVIL ENGINEER DATE

PLANS APPROVAL DATE

REGISTERED PROFESSIONAL ENGINEER No. Exp. CIVIL STATE OF CALIFORNIA

THE STATE OF CALIFORNIA OR ITS OFFICERS OR AGENTS SHALL NOT BE RESPONSIBLE FOR THE ACCURACY OR COMPLETENESS OF SCANNED COPIES OF THIS PLAN SHEET.

WMH CORPORATION
11070 WHITE ROCK RD
SUITE 140
RANCHO CORDOVA
CA 95670

SOLANO TRANSPORTATION AUTHORITY
1 HARBOR CENTER
SUITE 130
SUISUN CITY, CA 94585

PRELIMINARY PLANS SUBJECT TO REVISION

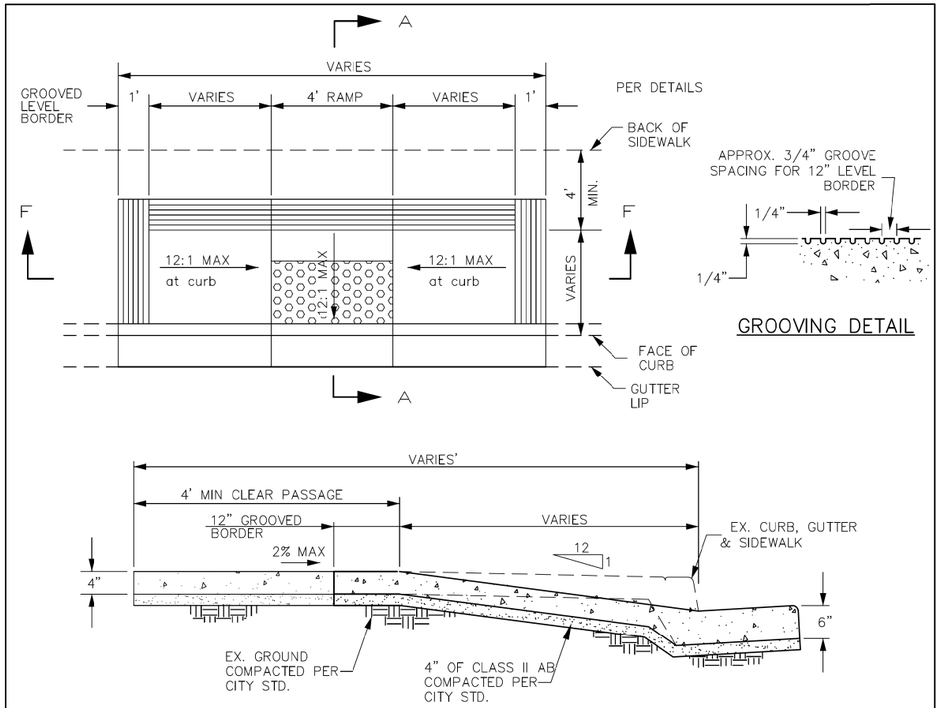

NOTE: TYPE 1 CURB RAMP SHALL CONFORM TO CALTRANS TYPE A CURB RAMP, A88A

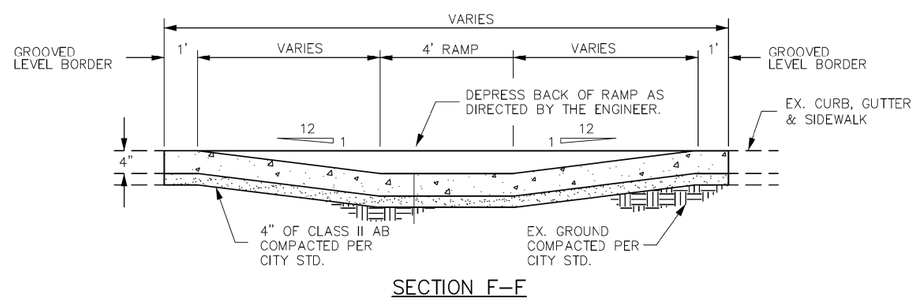

	CITY OF VALLEJO STANDARD DETAIL	APPROVED BY:	DRAWING NO: 3-25
Vallejo "Made to Serve"	STANDARD TYPE 5 CURB RAMP DETAIL	DIRECTOR OF PUBLIC WORKS	SCALE: NONE
			DATE: 09/13/11

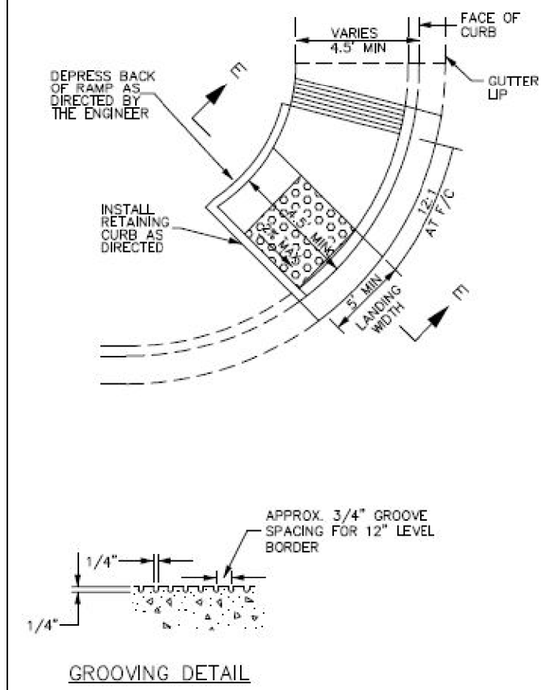

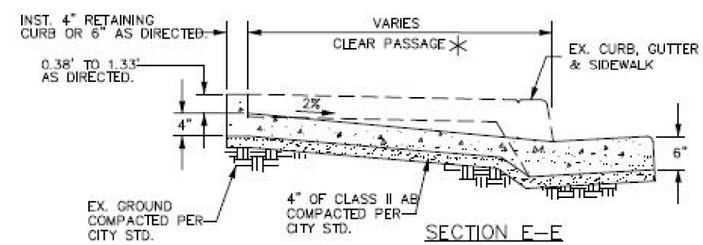

	CITY OF VALLEJO STANDARD DETAIL	APPROVED BY:	DRAWING NO: 3-27
Vallejo "Made to Serve"	STANDARD MODIFIED TYPE 2 CURB RAMP DETAIL	DIRECTOR OF PUBLIC WORKS	SCALE: NONE
			DATE: 09/13/11

CONSTRUCTION DETAILS

CURB AND GUTTER

NO SCALE

C-11

REVISED BY	DATE REVISED	CALCULATED-DESIGNED BY	CHECKED BY	CONSULTANT FUNCTIONAL SUPERVISOR
J.V.	02/15/22	JAMEY VALDIVIA	CARL GIBSON III	CARL GIBSON III

STATE OF CALIFORNIA - DEPARTMENT OF TRANSPORTATION

Caltrans

X:\SR 37_FAIRGROUNDS DRIVE\000_CAD\Sheets\013-Const_Details\044A4414ga011.dgn

LAST REVISION 00-00-00 | DATE PLOTTED => 9/2/2022 TIME PLOTTED => 3:38:39 PM

BORDER LAST REVISED 7/2/2010 | USERNAME => jvaldivia DGN FILE => 044A4414ga011.dgn | RELATIVE BORDER SCALE IS IN INCHES 0 1 2 3 | UNIT 0738 | PROJECT NUMBER & PHASE 04000205841

Dist	COUNTY	ROUTE	POST MILES TOTAL PROJECT	SHEET No.	TOTAL SHEETS
04	Sol	37	10.9		

REGISTERED CIVIL ENGINEER DATE

PLANS APPROVAL DATE

REGISTERED PROFESSIONAL ENGINEER No. Exp. CIVIL STATE OF CALIFORNIA

THE STATE OF CALIFORNIA OR ITS OFFICERS OR AGENTS SHALL NOT BE RESPONSIBLE FOR THE ACCURACY OR COMPLETENESS OF SCANNED COPIES OF THIS PLAN SHEET.

WMH CORPORATION
11070 WHITE ROCK RD
SUITE 140
RANCHO CORDOVA
CA 95670

SOLANO TRANSPORTATION AUTHORITY
1 HARBOR CENTER
SUITE 130
SUISUN CITY, CA 94585

PRELIMINARY PLANS SUBJECT TO REVISION

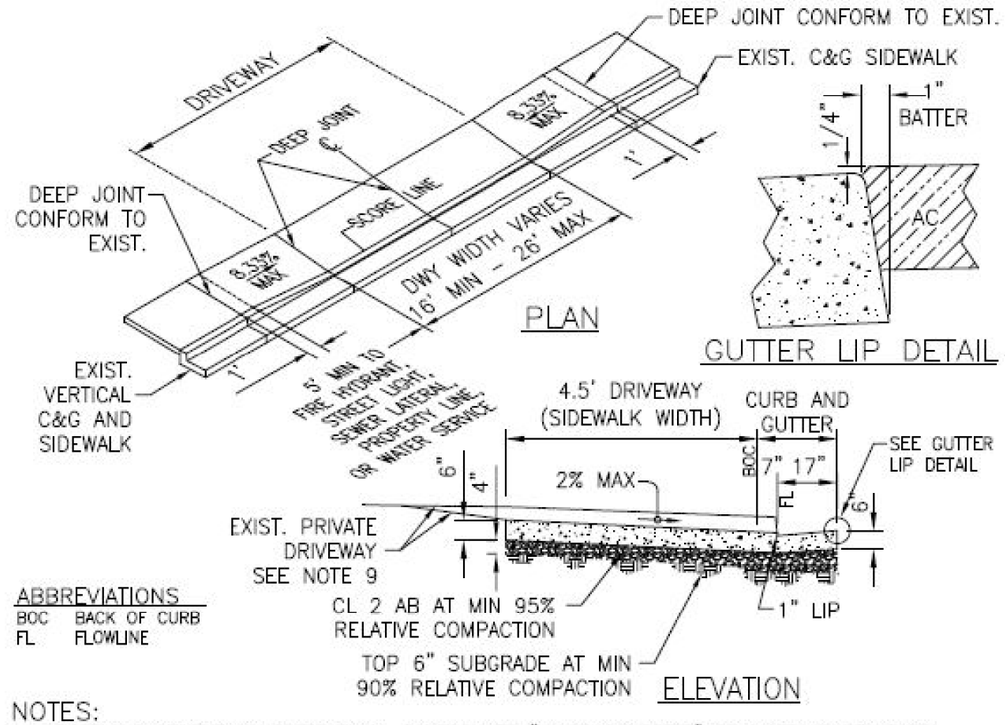

ABBREVIATIONS

BOC	BACK OF CURB
FL	FLOWLINE

NOTES:

1. PORTLAND CEMENT CONCRETE SHALL CONFORM TO "MINOR CONCRETE" OF CALTRANS STANDARD SPECIFICATIONS EXCEPT THAT THE CEMENT CONTENT SHALL BE A MINIMUM OF 6 SACKS OF CEMENT PER CUBIC YARD OF CONCRETE.
2. UNLESS OTHERWISE PERMITTED, REPLACE PAVEMENT PER CITY STANDARD DRAWING 3-20, "EXIST. STREET" A MINIMUM OF 12" BEYOND ALL EDGES OF WORK.
3. SCORE LINE SHALL BE 1/4" DEEP.
4. DEEP JOINTS SHALL BE 1" MIN DEEP EXTENDING THROUGH CURB AND GUTTER.
5. DEEP JOINTS SHALL ALSO BE LOCATED AT CURB RETURNS, STREET LIGHTS, AT EACH EDGE OF UTILITY BOXES AND AT EACH END OF DRIVEWAYS AND CENTER OF DRIVEWAY.
6. ANY CURB, GUTTER AND SIDEWALK AREA TO BE REPLACED SHALL BE DOWELED TO EXIST. CURB WITH #4 REBAR AT 2' O.C., MIN 9" LONG WITH 3" MIN EMBEDMENT.
7. IF CURB, GUTTER AND SIDEWALK ARE NOT POURED MONOLITHICALLY, SIDEWALK IS TO BE DOWELLED TO CURB WITH #4 REBAR AT 2' O.C., MIN 9" LONG WITH 3" MIN EMBEDMENT.
8. REMOVAL OF EXIST. SIDEWALK, CURB OR GUTTER TO BE MADE TO NEAREST SCORE LINE OR DEEP JOINT.
9. THE EXIST. PRIVATE DRIVEWAY WILL NEED TO BE MODIFIED TO CONFORM TO NEW ELEVATION OF RETROFIT.
10. ANY UTILITY BOX AND LID WITHIN THE LIMITS OF THE DRIVEWAY SHALL BE TRAFFIC-RATED.

Vallejo "Made in America"

CITY OF VALLEJO STANDARD DETAIL

STANDARD
RESIDENTIAL DRIVEWAY RETROFIT - TYPE 1
(ADJOINING VERTICAL CURB & GUTTER)

APPROVED BY:
DIRECTOR OF PUBLIC WORKS

DRAWING NO: 3-13
SCALE: NONE
DATE: 09/13/11

CONSTRUCTION DETAILS

CURB AND GUTTER

NO SCALE

C-12

REVISED BY	DATE REVISED
J.V.	02/15/22

JAMEY VALDIVIA
CARL GIBSON III
CALCULATED-DESIGNED BY
CHECKED BY
CONSULTANT FUNCTIONAL SUPERVISOR
CARL GIBSON III

STATE OF CALIFORNIA - DEPARTMENT OF TRANSPORTATION
Caltrans

X:\SR 37_FAIRGROUNDS DRIVE\000_CAD\Sheets\013-Const_Details\044A4414ga012.dgn

LAST REVISION 00-00-00
DATE PLOTTED => 9/2/2022
TIME PLOTTED => 3:39:09 PM

Dist	COUNTY	ROUTE	POST MILES TOTAL PROJECT	SHEET No.	TOTAL SHEETS
04	Sol	37	10.9		

REGISTERED CIVIL ENGINEER DATE

PLANS APPROVAL DATE

REGISTERED PROFESSIONAL ENGINEER No. Exp. CIVIL STATE OF CALIFORNIA

THE STATE OF CALIFORNIA OR ITS OFFICERS OR AGENTS SHALL NOT BE RESPONSIBLE FOR THE ACCURACY OR COMPLETENESS OF SCANNED COPIES OF THIS PLAN SHEET.

WMH CORPORATION
11070 WHITE ROCK RD
SUITE 140
RANCHO CORDOVA
CA 95670

SOLANO TRANSPORTATION AUTHORITY
1 HARBOR CENTER
SUITE 130
SUISUN CITY, CA 94585

PRELIMINARY PLANS SUBJECT TO REVISION

NOTE:

DUE TO EQUIPMENT LIMITATIONS, CONTRACTOR MAY NEED TO HAND CHIP ADJACENT TO BARRIER AND ANY ANCILLARY FEATURES.

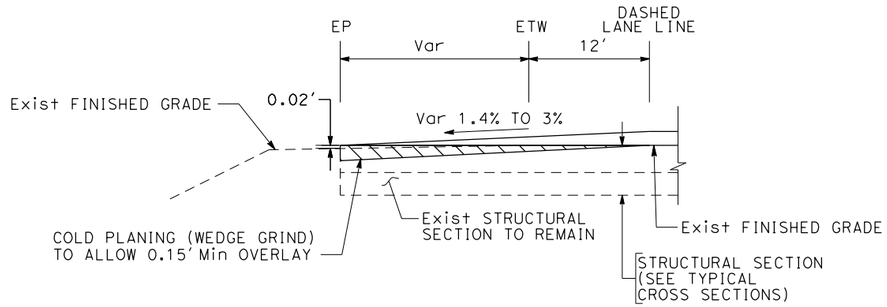

WEDGE GRIND CONFORM
(ADJACENT TO EP)
"F" LINE 20+00 TO 22+00

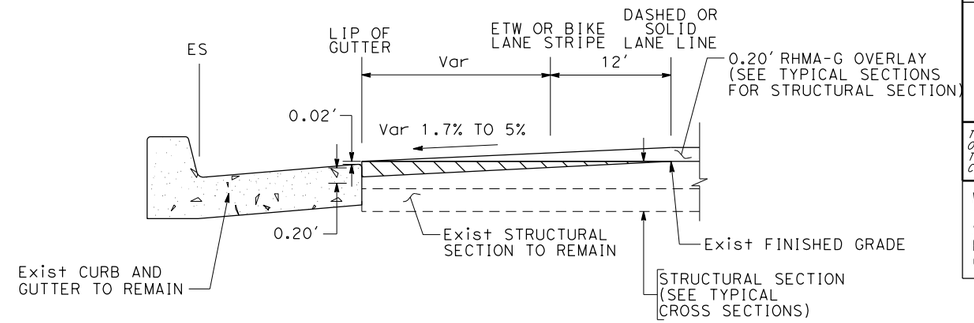

WEDGE GRIND CONFORM
(ADJACENT TO CURB AND GUTTER)
"F" 31+00 TO 36+50
"FS" 71+00 TO 77+66
"F6" 473+33.85 TO 474+94.86

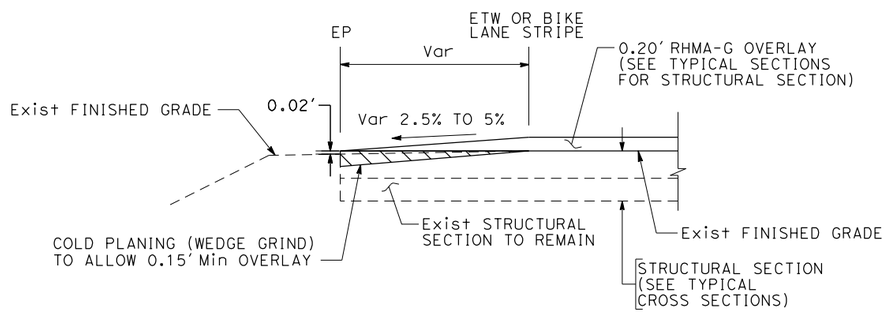

WEDGE GRIND CONFORM
(ADJACENT TO EP)
"F" LINE 22+00 TO 28+28.88

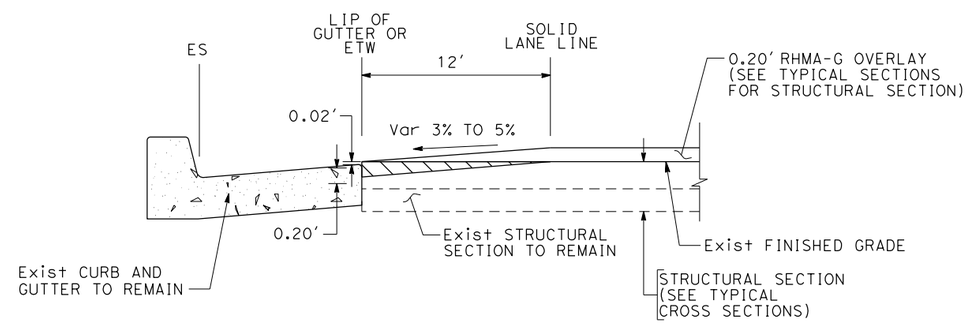

WEDGE GRIND CONFORM
(ADJACENT TO CURB AND GUTTER)
"F" 36+50 TO 40+00

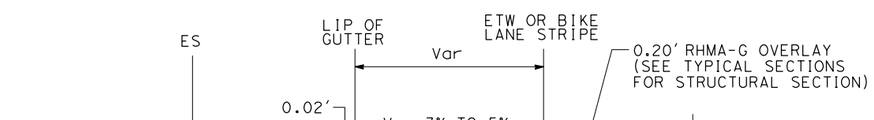

WEDGE GRIND CONFORM
(ADJACENT TO CURB AND GUTTER)
"F" 28.88 TO 31+00
"F" 40+00 TO 42+66
"F5" 373+82.39 TO 374+87
"FS" LINE 84+50 TO 88+16.55

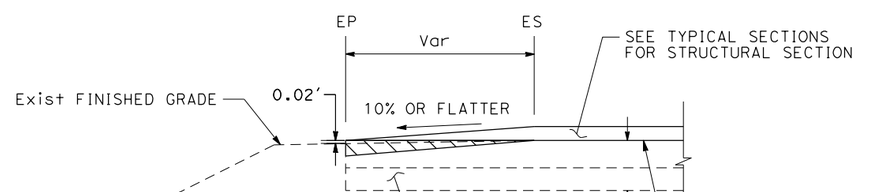

WEDGE GRIND CONFORM
(ADJACENT TO EP)
"FA1" 171+00 TO 172+72

CONSTRUCTION DETAILS

WEDGE GRIND

NO SCALE

C-13

REVISED BY	DATE REVISED	JAMEY VALDIVIA	CARL GIBSON III	CALCULATED-DESIGNED BY	CHECKED BY	CARL GIBSON III	CONSULTANT FUNCTIONAL SUPERVISOR	J.V.	02/15/22

STATE OF CALIFORNIA - DEPARTMENT OF TRANSPORTATION

Caltrans

X:\SR 37_FAIRGROUNDS DRIVE\000_CAD\Sheets\013-Const_Details\044A4414ga013.dgn

LAST REVISION 00-00-00 | DATE PLOTTED => 9/2/2022 | TIME PLOTTED => 3:39:35 PM

Dist	COUNTY	ROUTE	POST MILES TOTAL PROJECT	SHEET No.	TOTAL SHEETS
04	Sol	37	10.9		

REGISTERED CIVIL ENGINEER DATE

PLANS APPROVAL DATE

REGISTERED PROFESSIONAL ENGINEER No. Exp. CIVIL STATE OF CALIFORNIA

THE STATE OF CALIFORNIA OR ITS OFFICERS OR AGENTS SHALL NOT BE RESPONSIBLE FOR THE ACCURACY OR COMPLETENESS OF SCANNED COPIES OF THIS PLAN SHEET.

WMH CORPORATION
11070 WHITE ROCK RD
SUITE 140
RANCHO CORDOVA
CA 95670

SOLANO TRANSPORTATION AUTHORITY
1 HARBOR CENTER
SUITE 130
SUISUN CITY, CA 94585

PRELIMINARY PLANS SUBJECT TO REVISION

NOTE:

DUE TO EQUIPMENT LIMITATIONS, CONTRACTOR MAY NEED TO HAND CHIP ADJACENT TO BARRIER AND ANY ANCILLARY FEATURES.

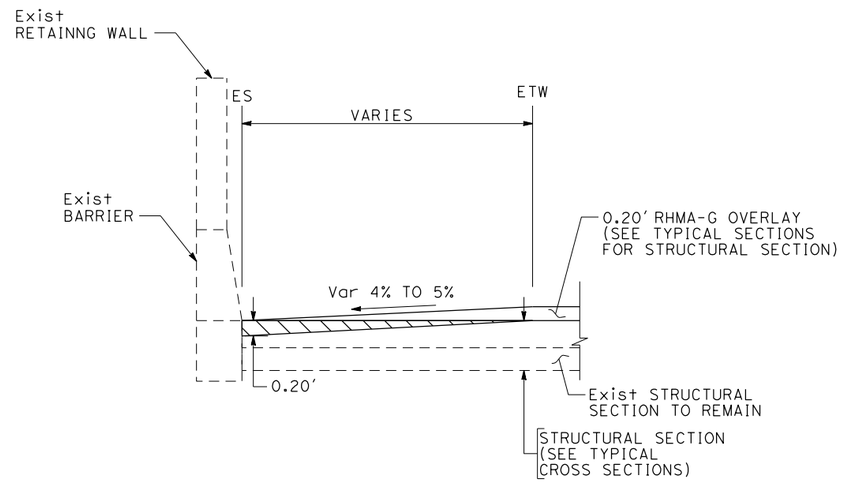

WEDGE GRIND CONFORM
(ADJACENT TO Exist RETAINING WALL)
"FA1" 171+00 TO 172+07.09

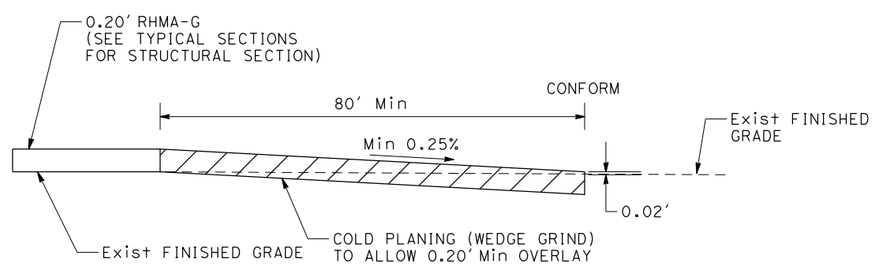

LONGITUDINAL WEDGE GRIND CONFORM

CONSTRUCTION DETAILS

WEDGE GRIND

NO SCALE

C-14

JAMEY VALDIVIA	REVISED BY	J.V.	
CARL GIBSON III	DATE REVISED	02/15/22	
CALCULATED-DESIGNED BY			
CHECKED BY			
CARL GIBSON III	CONSULTANT FUNCTIONAL SUPERVISOR		

STATE OF CALIFORNIA - DEPARTMENT OF TRANSPORTATION

Caltrans

X:\SR 37_FAIRGROUNDS DRIVE\000_CAD\Sheets\013-Const_Details\044A4414ga014.dgn

DATE PLOTTED => 9/2/2022
TIME PLOTTED => 3:39:42 PM

LAST REVISION 00-00-00

Dist	COUNTY	ROUTE	POST MILES TOTAL PROJECT	SHEET No.	TOTAL SHEETS
04	Sol	37	10.9		

REGISTERED CIVIL ENGINEER DATE

PLANS APPROVAL DATE

REGISTERED PROFESSIONAL ENGINEER No. Exp. CIVIL STATE OF CALIFORNIA

THE STATE OF CALIFORNIA OR ITS OFFICERS OR AGENTS SHALL NOT BE RESPONSIBLE FOR THE ACCURACY OR COMPLETENESS OF SCANNED COPIES OF THIS PLAN SHEET.

WMH CORPORATION
11070 WHITE ROCK RD
SUITE 140
RANCHO CORDOVA
CA 95670

SOLANO TRANSPORTATION AUTHORITY
1 HARBOR CENTER
SUITE 130
SUISUN CITY, CA 94585

PRELIMINARY PLANS SUBJECT TO REVISION

NOTE:

DIKES AND CONCRETE BARRIERS SHALL NOT BE PLACED ON TOP OF RHMA-O.

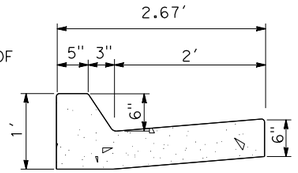

SECTION A-A

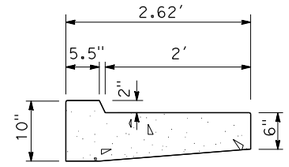

SECTION B-B

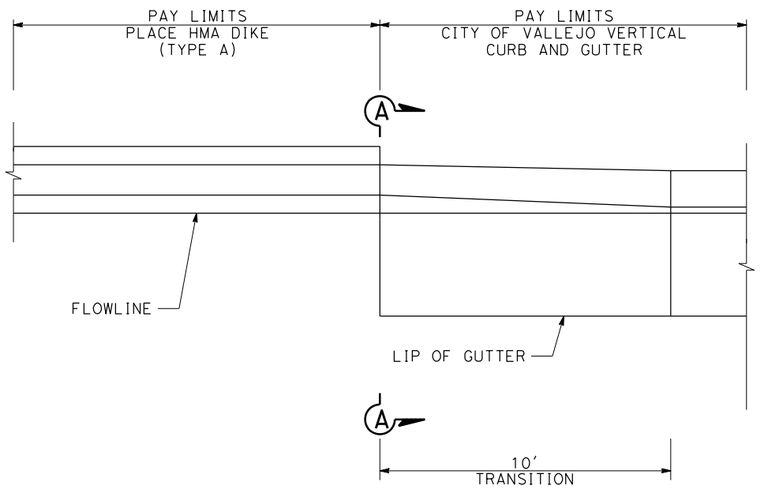

PLAN

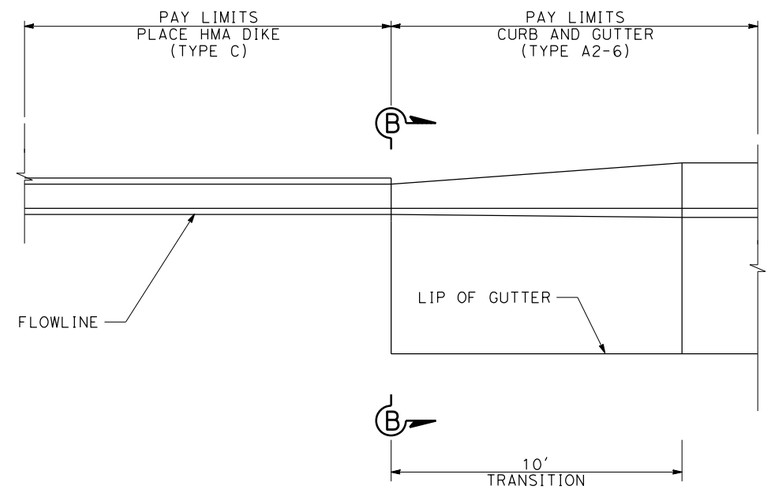

PLAN

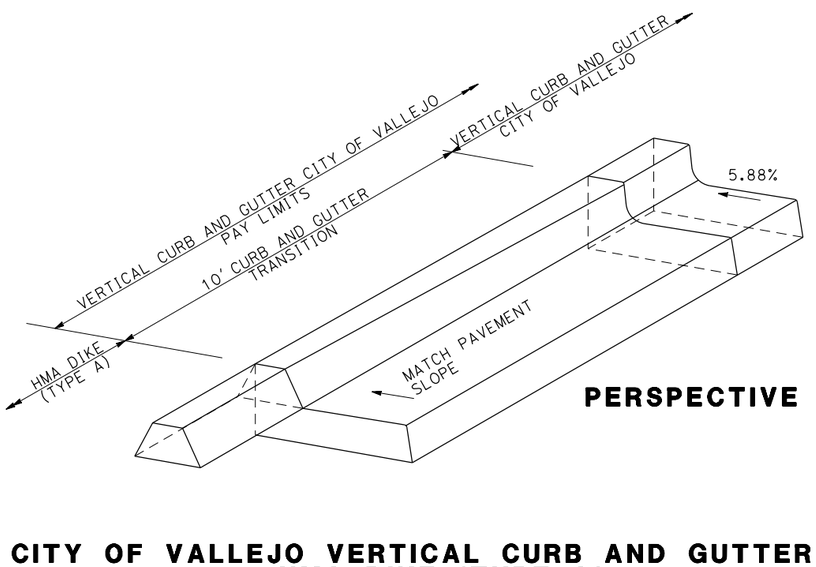

PERSPECTIVE

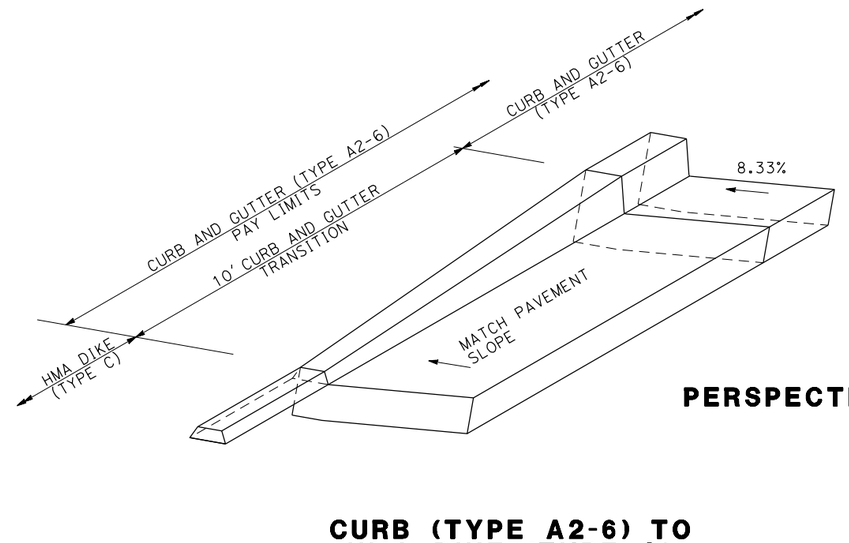

PERSPECTIVE

CITY OF VALLEJO VERTICAL CURB AND GUTTER TO HMA DIKE (TYPE A)

CURB (TYPE A2-6) TO HMA DIKE (TYPE C)

CONSTRUCTION DETAILS

CURB AND DIKE TRANSITIONS

NO SCALE

C-15

REVISED BY	DATE REVISED
J.V.	02/15/22

CALCULATED-DESIGNED BY	CHECKED BY
JAMEY VALDIVIA	CARL GIBSON III

CONSULTANT FUNCTIONAL SUPERVISOR
CARL GIBSON III

STATE OF CALIFORNIA - DEPARTMENT OF TRANSPORTATION

Caltrans

X:\SR 37_FAIRGROUNDS DRIVE\000_CAD\Sheets\013-Const_Details\044A4414ga015.dgn

LAST REVISION 00-00-00 | DATE PLOTTED => 9/2/2022 | TIME PLOTTED => 3:40:07 PM

Dist	COUNTY	ROUTE	POST MILES TOTAL PROJECT	SHEET No.	TOTAL SHEETS
04	Sol	37	10.9		

REGISTERED CIVIL ENGINEER DATE

PLANS APPROVAL DATE

REGISTERED PROFESSIONAL ENGINEER No. Exp. CIVIL STATE OF CALIFORNIA

THE STATE OF CALIFORNIA OR ITS OFFICERS OR AGENTS SHALL NOT BE RESPONSIBLE FOR THE ACCURACY OR COMPLETENESS OF SCANNED COPIES OF THIS PLAN SHEET.

WMH CORPORATION
11070 WHITE ROCK RD
SUITE 140
RANCHO CORDOVA
CA 95670

SOLANO TRANSPORTATION AUTHORITY
1 HARBOR CENTER
SUITE 130
SUISUN CITY, CA 94585

PRELIMINARY PLANS SUBJECT TO REVISION

NOTE:

DIKES AND CONCRETE BARRIERS SHALL NOT BE PLACED ON TOP OF RHMA-O.

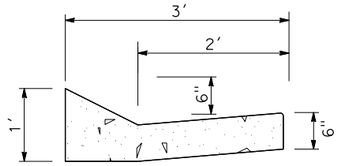

SECTION A-A

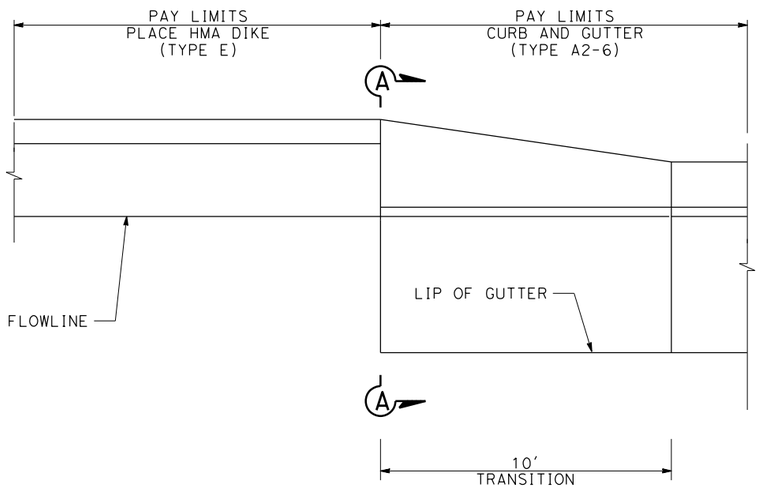

PLAN

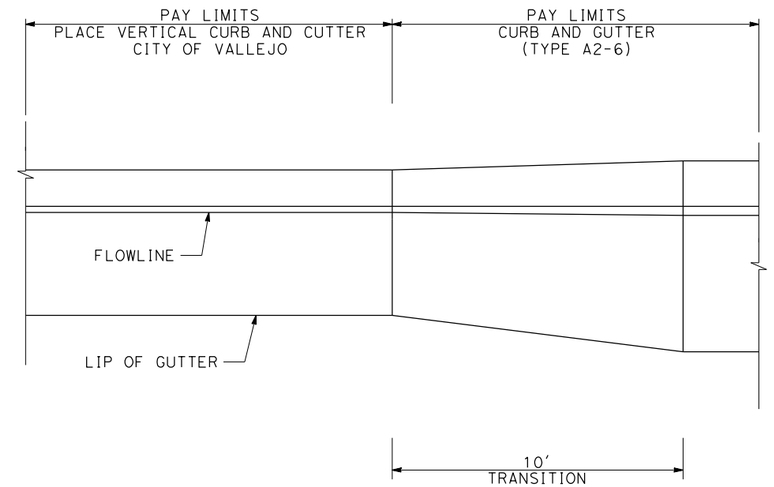

PLAN

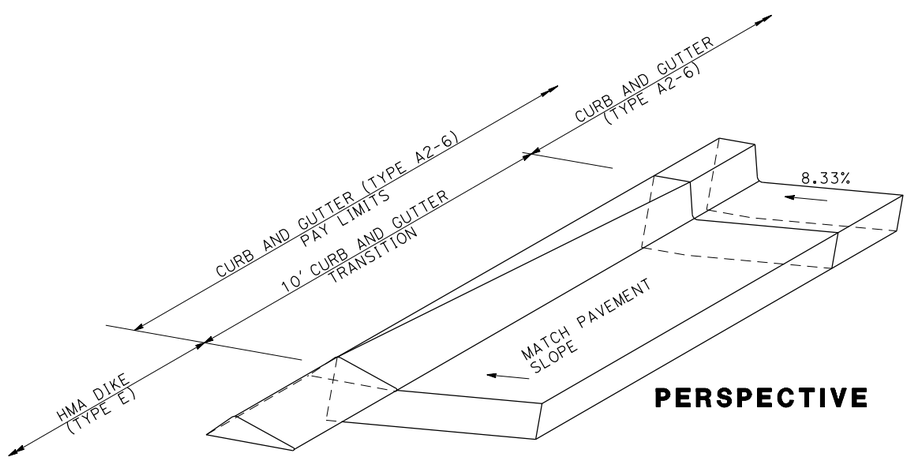

PERSPECTIVE

CURB (TYPE A2-6) TO HMA DIKE (TYPE E)

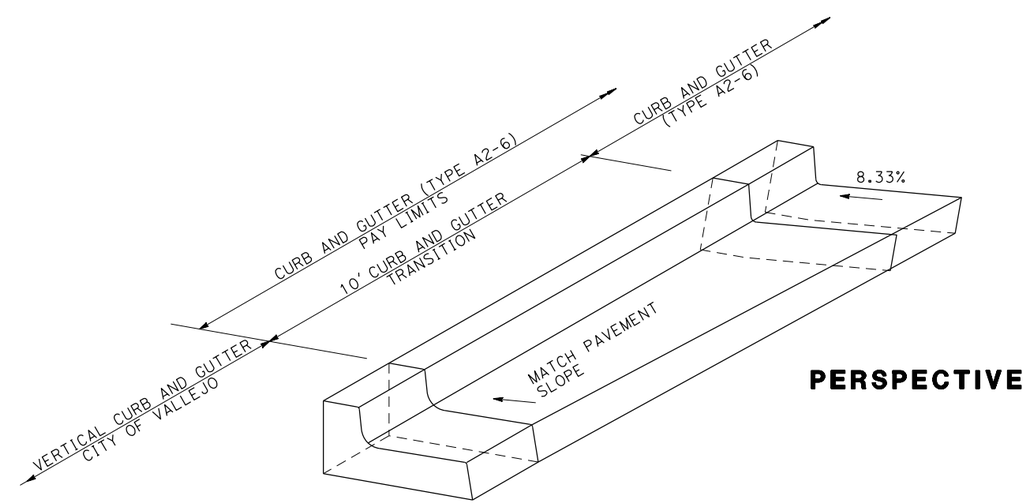

PERSPECTIVE

CURB (TYPE A2-6) TO CITY OF VALLEJO VERTICAL CURB AND GUTTER

CONSTRUCTION DETAILS

CURB AND DIKE TRANSITIONS

NO SCALE

C-16

REVISED BY	DATE REVISED
J.V.	02/15/22

CALCULATED-DESIGNED BY	CHECKED BY
JAMEY VALDIVIA	CARL GIBSON III

CONSULTANT FUNCTIONAL SUPERVISOR: CARL GIBSON III

STATE OF CALIFORNIA - DEPARTMENT OF TRANSPORTATION

Caltrans

X:\SR 37_FAIRGROUNDS DRIVE\000_CAD\Sheets\013-Const_Details\044A4414ga016.dgn

LAST REVISION 00-00-00 | DATE PLOTTED => 9/2/2022 | TIME PLOTTED => 3:40:13 PM

Dist	COUNTY	ROUTE	POST MILES TOTAL PROJECT	SHEET No.	TOTAL SHEETS
04	Sol	37	10.9		

REGISTERED CIVIL ENGINEER DATE

PLANS APPROVAL DATE

REGISTERED PROFESSIONAL ENGINEER No. Exp. CIVIL STATE OF CALIFORNIA

THE STATE OF CALIFORNIA OR ITS OFFICERS OR AGENTS SHALL NOT BE RESPONSIBLE FOR THE ACCURACY OR COMPLETENESS OF SCANNED COPIES OF THIS PLAN SHEET.

WMH CORPORATION
11070 WHITE ROCK RD
SUITE 140
RANCHO CORDOVA
CA 95670

SOLANO TRANSPORTATION AUTHORITY
1 HARBOR CENTER
SUITE 130
SUISUN CITY, CA 94585

PRELIMINARY PLANS SUBJECT TO REVISION

NOTE:

DIKES AND CONCRETE BARRIERS SHALL NOT BE PLACED ON TOP OF RHMA-O.

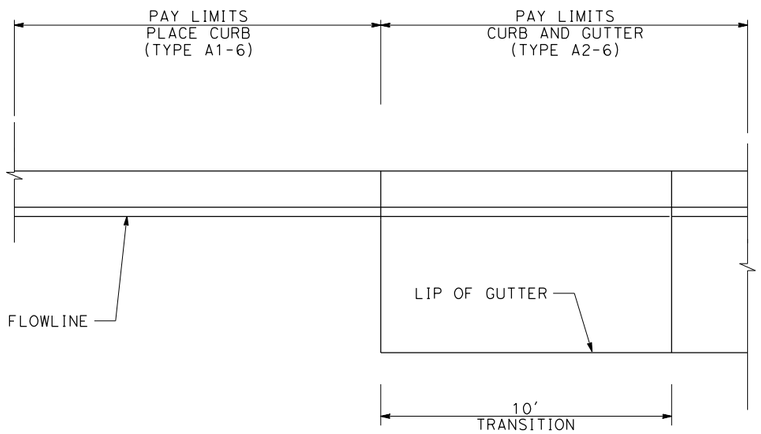

PLAN

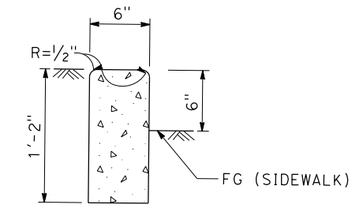

RETAINING CURB

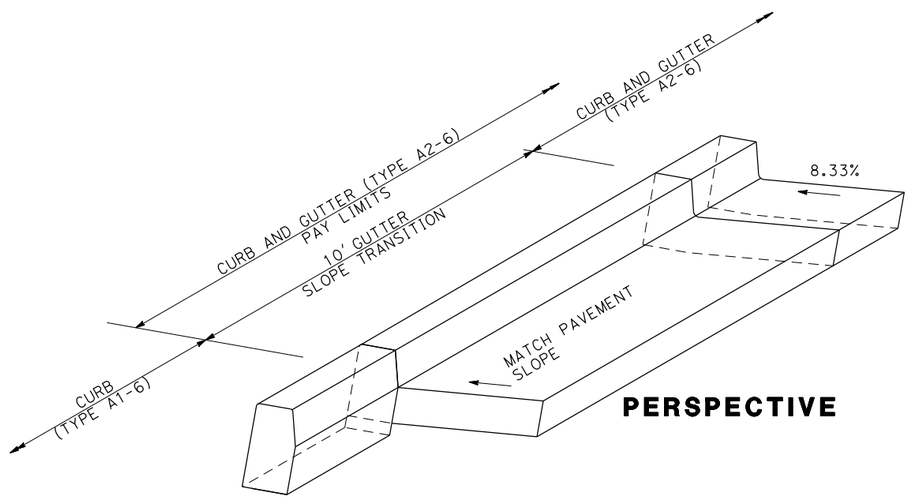

PERSPECTIVE

CURB (TYPE A2-6) TO CURB (TYPE A1-6)

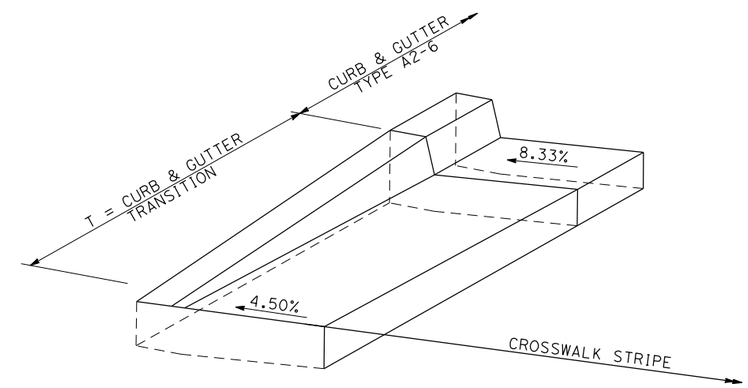

PERSPECTIVE

CURB (TYPE A2-6) TO CROSSWALK

CONSTRUCTION DETAILS

CURB AND DIKE TRANSITIONS

NO SCALE

C-17

J.V.	02/15/22		
REVISED BY	DATE REVISED		
JAMEY VALDIVIA	CARL GIBSON III	CALCULATED-DESIGNED BY	CHECKED BY
CONSULTANT FUNCTIONAL SUPERVISOR	CARL GIBSON III		

STATE OF CALIFORNIA - DEPARTMENT OF TRANSPORTATION

Caltrans

X:\SR 37_FAIRGROUNDS DRIVE\000_CAD\Sheets\013-Const_Details\044A4414ga017.dgn

LAST REVISION 00-00-00 | DATE PLOTTED => 9/2/2022 | TIME PLOTTED => 3:40:21 PM

Dist	COUNTY	ROUTE	POST MILES TOTAL PROJECT	SHEET No.	TOTAL SHEETS
04	Sol	37	10.9		

REGISTERED CIVIL ENGINEER DATE

PLANS APPROVAL DATE

REGISTERED PROFESSIONAL ENGINEER No. Exp. CIVIL STATE OF CALIFORNIA

THE STATE OF CALIFORNIA OR ITS OFFICERS OR AGENTS SHALL NOT BE RESPONSIBLE FOR THE ACCURACY OR COMPLETENESS OF SCANNED COPIES OF THIS PLAN SHEET.

WMH CORPORATION
11070 WHITE ROCK RD
SUITE 140
RANCHO CORDOVA
CA 95670

SOLANO TRANSPORTATION AUTHORITY
1 HARBOR CENTER
SUITE 130
SUISUN CITY, CA 94585

PRELIMINARY PLANS SUBJECT TO REVISION

NOTE:

DIKES AND CONCRETE BARRIERS SHALL NOT BE PLACED ON TOP OF RHMA-O.

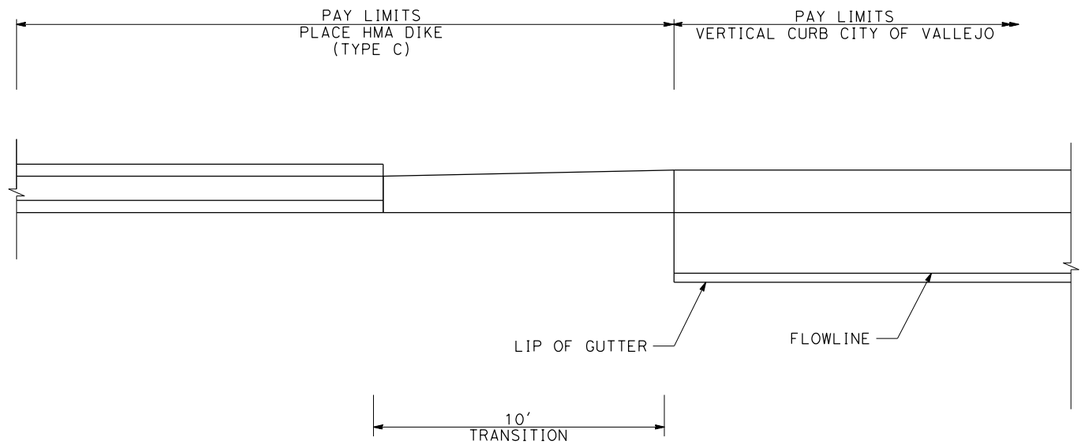

PLAN

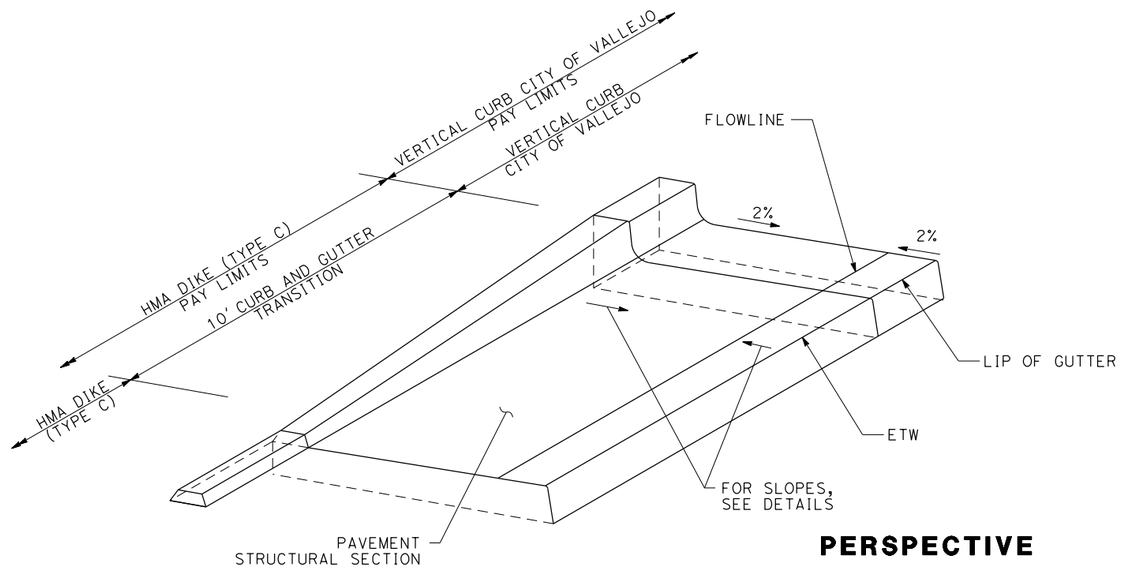

PERSPECTIVE

CITY OF VALLEJO VERTICAL CURB (BUS PARKING BAY) TO HMA DIKE (TYPE C)

CONSTRUCTION DETAILS

CURB AND DIKE TRANSITIONS

NO SCALE

C-18

REVISED BY	DATE REVISED
J.V.	02/15/22

JAMEY VALDIVIA — CARL GIBSON III

CALCULATED-DESIGNED BY — CHECKED BY

CONSULTANT FUNCTIONAL SUPERVISOR — CARL GIBSON III

STATE OF CALIFORNIA - DEPARTMENT OF TRANSPORTATION — Caltrans

X:\SR 37_FAIRGROUNDS DRIVE\000_CAD\Sheets\013-Const_Details\044A4414ga018.dgn

LAST REVISION 00-00-00 | DATE PLOTTED => 9/2/2022 TIME PLOTTED => 3:40:32 PM

BORDER LAST REVISED 7/2/2010 | USERNAME => jvaldivia DGN FILE => 044A4414ga018.dgn | RELATIVE BORDER SCALE IS IN INCHES 0 1 2 3 | UNIT 0738 | PROJECT NUMBER & PHASE 04000205841

Dist	COUNTY	ROUTE	POST MILES TOTAL PROJECT	SHEET No.	TOTAL SHEETS
04	Sol	37	10.9		

REGISTERED CIVIL ENGINEER DATE

PLANS APPROVAL DATE

REGISTERED PROFESSIONAL ENGINEER No. Exp. CIVIL STATE OF CALIFORNIA

THE STATE OF CALIFORNIA OR ITS OFFICERS OR AGENTS SHALL NOT BE RESPONSIBLE FOR THE ACCURACY OR COMPLETENESS OF SCANNED COPIES OF THIS PLAN SHEET.

WMH CORPORATION
11070 WHITE ROCK RD
SUITE 140
RANCHO CORDOVA
CA 95670

SOLANO TRANSPORTATION AUTHORITY
1 HARBOR CENTER
SUITE 130
SUISUN CITY, CA 94585

PRELIMINARY PLANS SUBJECT TO REVISION

ABBREVIATION:

LOG LIP OF GUTTER

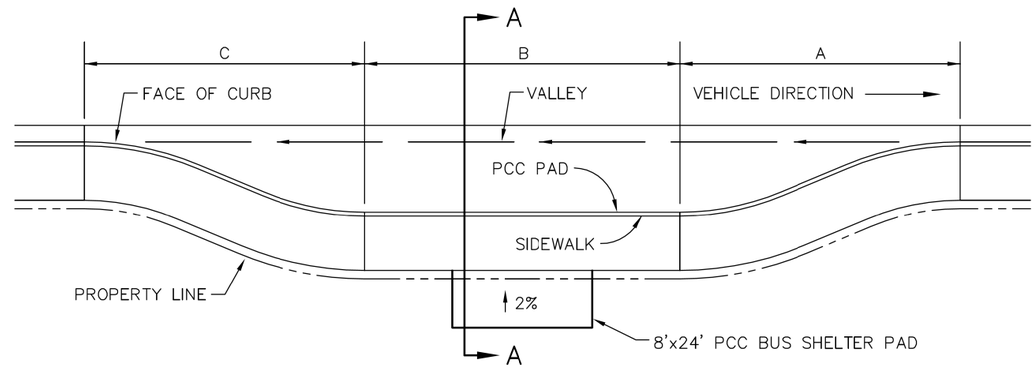

PLAN

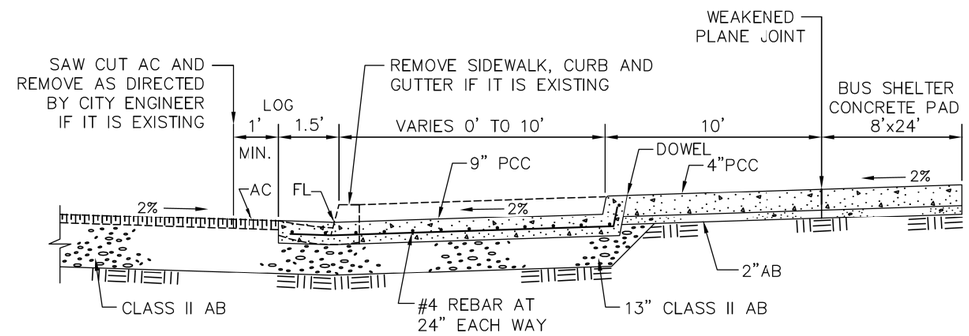

SECTION A–A

MINIMUM DISTANCES

POSTED SPEED OF STREET (MPH)	1 BUS <20	1 BUS 20–30	1 BUS 30–40	2 BUS <20	2 BUS 20–30	2 BUS 30–40
A (FT)	50	80	125	50	80	125
B (FT)	50	50	50	90	90	90
C (FT)		100	225	50	100	225

NOTES:
1. THE SIDEWALK IS TO BE CONSTRUCTED PER THE CITY OF VALLEJO STANDARD DRAWING #3–10
2. THE PCC PAD FOR THE BUS BAY AND SHELTER SHALL:
   a) BE BROOM FINISH UNLESS OTHERWISE DIRECTED BY THE CITY
   b) USE PIGMENTED SEALING COMPOUND FOR CURING
   c) HAVE A DEEP JOINT EVERY 12 FEET PER CITY OF VALLEJO STANDARD DRAWING #3–9

Vallejo "Pride in Service"

CITY OF VALLEJO STANDARD DETAIL

STANDARD
BUS PARKING BAY

APPROVED BY:

DIRECTOR OF PUBLIC WORKS

DRAWING NO: 3–28

SCALE: NONE

DATE: 09/13/11

CONSTRUCTION DETAILS

BUS PARKING BAY

NO SCALE

C-19

REVISED BY	DATE REVISED
J.V.	02/15/22

JAMEY VALDIVIA — CARL GIBSON III

CALCULATED-DESIGNED BY — CHECKED BY

CONSULTANT FUNCTIONAL SUPERVISOR — CARL GIBSON III

STATE OF CALIFORNIA - DEPARTMENT OF TRANSPORTATION

Caltrans

X:\SR 37_FAIRGROUNDS DRIVE\000_CAD\Sheets\013-Const_Details\044A4414ga019.dgn

LAST REVISION 00-00-00 | DATE PLOTTED => 9/2/2022 | TIME PLOTTED => 3:40:36 PM

Dist	COUNTY	ROUTE	POST MILES TOTAL PROJECT	SHEET No.	TOTAL SHEETS
04	Sol	37	10.9		

REGISTERED CIVIL ENGINEER DATE

PLANS APPROVAL DATE

REGISTERED PROFESSIONAL ENGINEER No. Exp. CIVIL STATE OF CALIFORNIA

THE STATE OF CALIFORNIA OR ITS OFFICERS OR AGENTS SHALL NOT BE RESPONSIBLE FOR THE ACCURACY OR COMPLETENESS OF SCANNED COPIES OF THIS PLAN SHEET.

WMH CORPORATION
11070 WHITE ROCK RD
SUITE 140
RANCHO CORDOVA
CA 95670

SOLANO TRANSPORTATION AUTHORITY
1 HARBOR CENTER
SUITE 130
SUISUN CITY, CA 94585

PRELIMINARY PLANS SUBJECT TO REVISION

NOTE:

DIKES AND CONCRETE BARRIERS SHALL NOT BE PLACED ON TOP OF RHMA-O.

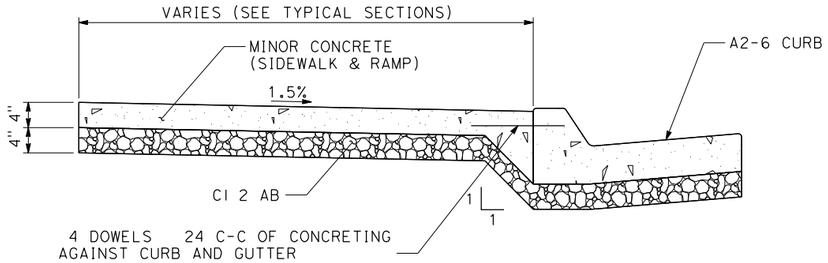

CURB TYPE (A2-6) WITH SIDEWALK

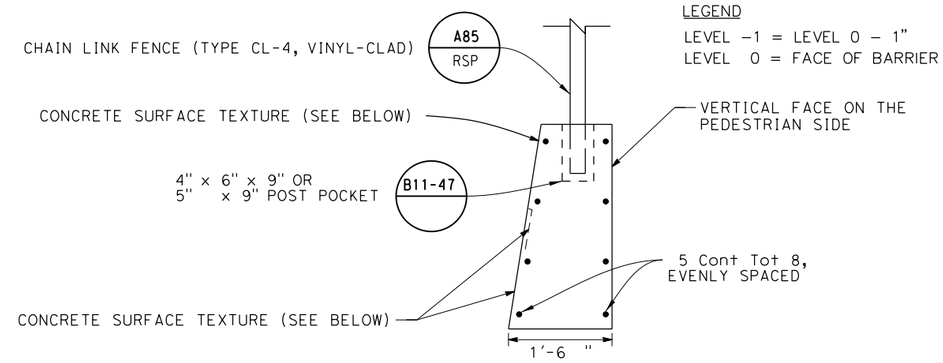

CONCRETE BARRIER TYPE 60MS (M)

FOR DETAILS NOT SHOWN, SEE STANDARD PLANS

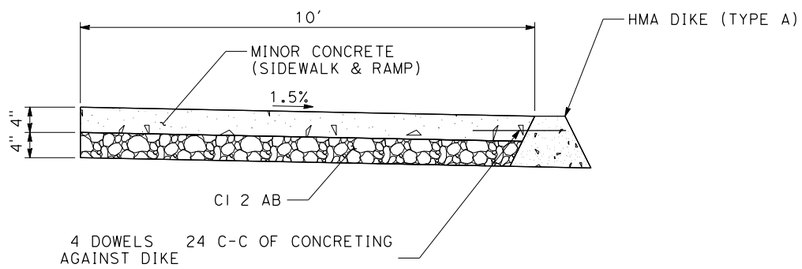

HMA DIKE (TYPE A) SIDEWALK (HDAS)

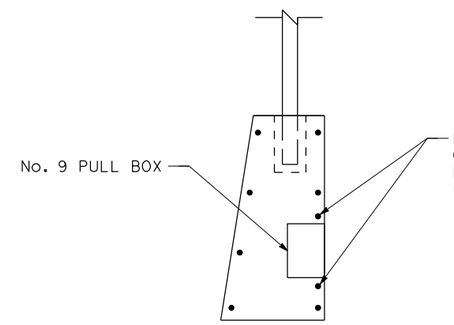

CONCRETE BARRIER TYPE 60MS (M) SECTION AT PULL BO

FOR LOCATION OF PULL BOX INSIDE THE BARRIER, SEE ELECTRICAL SHEETS.

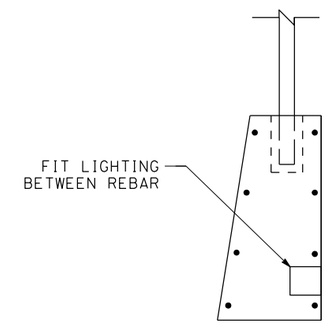

CONCRETE BARRIER TYPE 60MS (M) SECTION AT LIGHTING

FOR LOCATION OF LIGHTING INSIDE THE BARRIER, SEE ELECTRICALSHEETS.

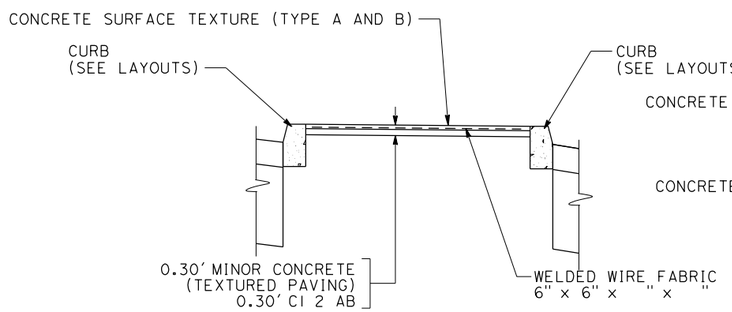

STAMPED CONCRETE

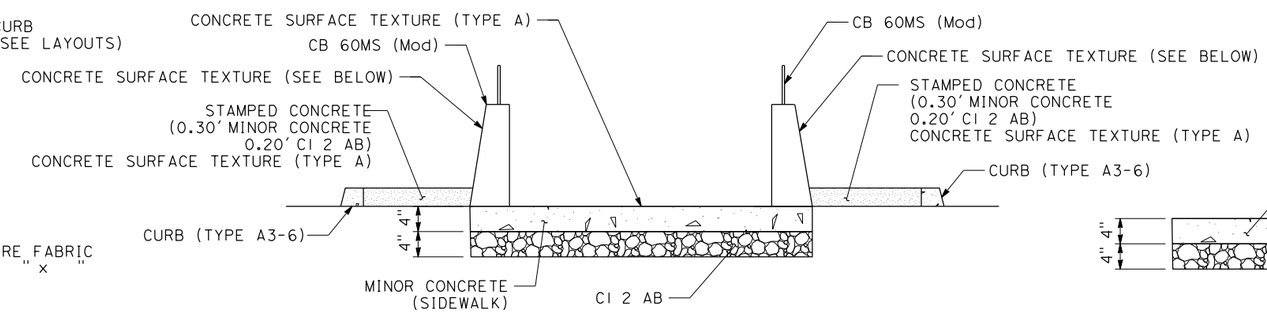

CENTER WALKWAY SIDEWALK

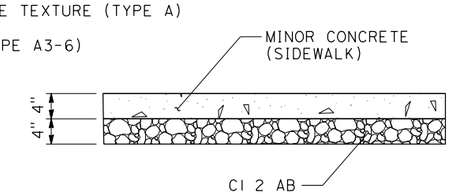

PORKCHOP SIDEWALK

CONSTRUCTION DETAILS

NO SCALE

C-20

REVISED BY	DATE REVISED	JAMEY VALDIVIA	CARL GIBSON III	CALCULATED-DESIGNED BY	CHECKED BY	CARL GIBSON III	CONSULTANT FUNCTIONAL SUPERVISOR
J.V.	02/15/22						

STATE OF CALIFORNIA - DEPARTMENT OF TRANSPORTATION

Caltrans

X:\SR 37_FAIRGROUNDS DRIVE\000_CAD\Sheets\013-Const_Details\044A4414ga020.dgn

LAST REVISION 00-00-00 | DATE PLOTTED => 9/2/2022 | TIME PLOTTED => 3:41:05 PM

Dist	COUNTY	ROUTE	POST MILES TOTAL PROJECT	SHEET No.	TOTAL SHEETS
04	Sol	37	10.9		

REGISTERED CIVIL ENGINEER DATE

PLANS APPROVAL DATE

REGISTERED PROFESSIONAL ENGINEER No. Exp. CIVIL STATE OF CALIFORNIA

THE STATE OF CALIFORNIA OR ITS OFFICERS OR AGENTS SHALL NOT BE RESPONSIBLE FOR THE ACCURACY OR COMPLETENESS OF SCANNED COPIES OF THIS PLAN SHEET.

WMH CORPORATION
11070 WHITE ROCK RD
SUITE 140
RANCHO CORDOVA
CA 95670

SOLANO TRANSPORTATION AUTHORITY
1 HARBOR CENTER
SUITE 130
SUISUN CITY, CA 94585

PRELIMINARY PLANS SUBJECT TO REVISION

NOTES:

1. FOR ACCURATE RIGHT OF WAY DATA, CONTACT RIGHT OF WAY ENGINEERING AT THE DISTRICT OFFICE.
2. FOR ABBREVIATIONS, SEE CURB RAMP DETAILS.

LEGEND:

DETECTABLE WARNING SURFACE

ABBREVIATIONS:

LOG LIP OF GUTTER
TC TOP OF CURB

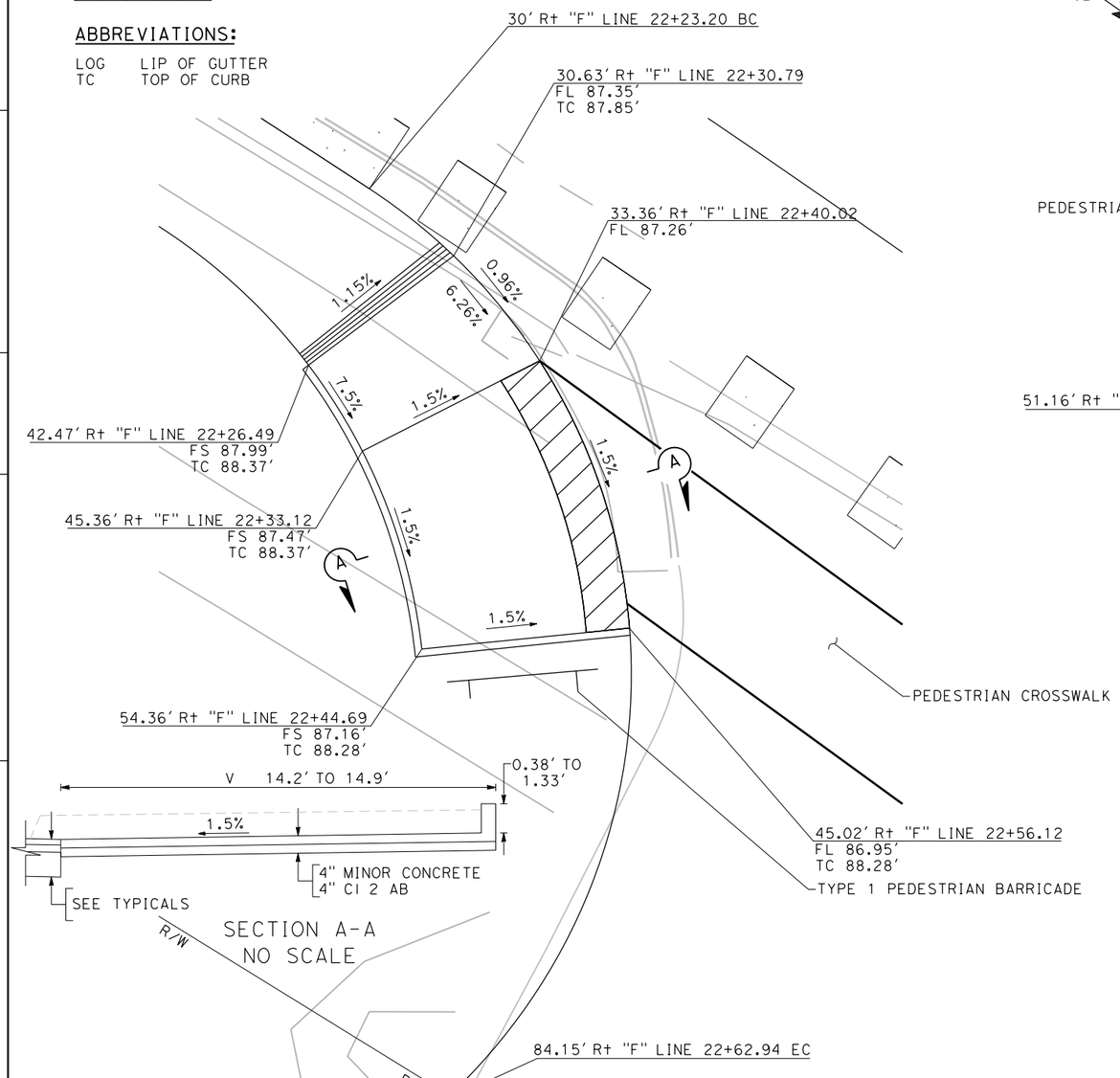

SECTION A-A
NO SCALE

NB "F" LINE 22+50

CR1
CITY MODIFIED TYPE 2 CURB RAMP

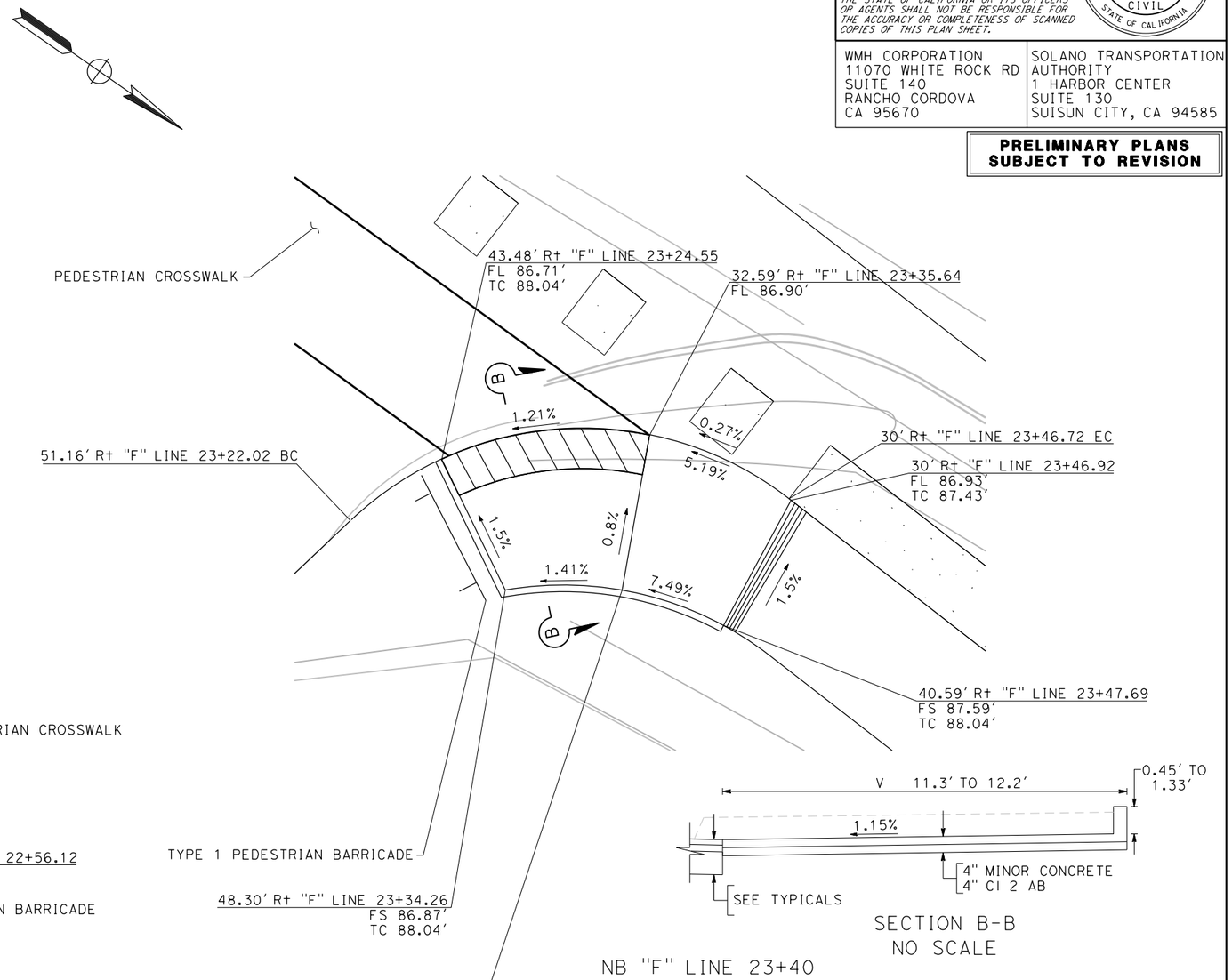

SECTION B-B
NO SCALE

NB "F" LINE 23+40

CR2
CITY MODIFIED TYPE 2 CURB RAMP

CONSTRUCTION DETAILS

CURB RAMP DETAILS

SCALE: 1" = 5'

C-21

REVISED BY	DATE REVISED
J.V.	02/15/22

JAMEY VALDIVIA — CARL GIBSON III — CALCULATED-DESIGNED BY — CHECKED BY

CARL GIBSON III — CONSULTANT FUNCTIONAL SUPERVISOR

STATE OF CALIFORNIA - DEPARTMENT OF TRANSPORTATION — Caltrans

X:\SR 37_FAIRGROUNDS DRIVE\000_CAD\Sheets\013-Const_Details\044A4414ga021.dgn

LAST REVISION 00-00-00 — DATE PLOTTED => 9/2/2022 — TIME PLOTTED => 3:42:50 PM

Dist	COUNTY	ROUTE	POST MILES TOTAL PROJECT	SHEET No.	TOTAL SHEETS
04	Sol	37	10.9		

REGISTERED CIVIL ENGINEER DATE

PLANS APPROVAL DATE

REGISTERED PROFESSIONAL ENGINEER No. Exp. CIVIL STATE OF CALIFORNIA

THE STATE OF CALIFORNIA OR ITS OFFICERS OR AGENTS SHALL NOT BE RESPONSIBLE FOR THE ACCURACY OR COMPLETENESS OF SCANNED COPIES OF THIS PLAN SHEET.

WMH CORPORATION
11070 WHITE ROCK RD
SUITE 140
RANCHO CORDOVA
CA 95670

SOLANO TRANSPORTATION AUTHORITY
1 HARBOR CENTER
SUITE 130
SUISUN CITY, CA 94585

PRELIMINARY PLANS SUBJECT TO REVISION

NOTES:

1. FOR ACCURATE RIGHT OF WAY DATA, CONTACT RIGHT OF WAY ENGINEERING AT THE DISTRICT OFFICE.
2. FOR ABBREVIATIONS, SEE CURB RAMP DETAILS.

LEGEND:

DETECTABLE WARNING SURFACE

ABBREVIATIONS:

BOW	BACK OF WALK
LOG	LIP OF GUTTER
TC	TOP OF CURB

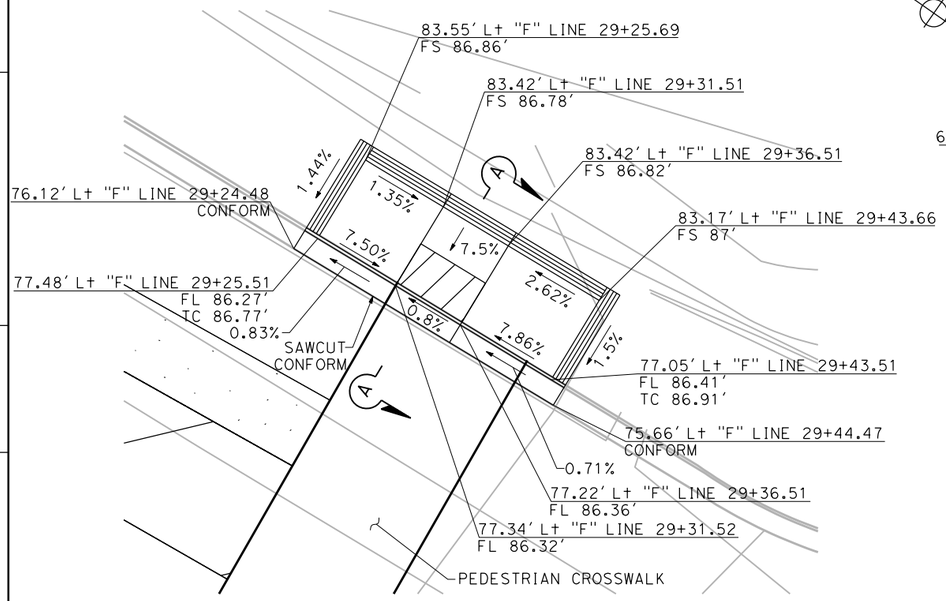

SB "F" LINE 29+50

CR4
CITY TYPE 5
CURB RAMP

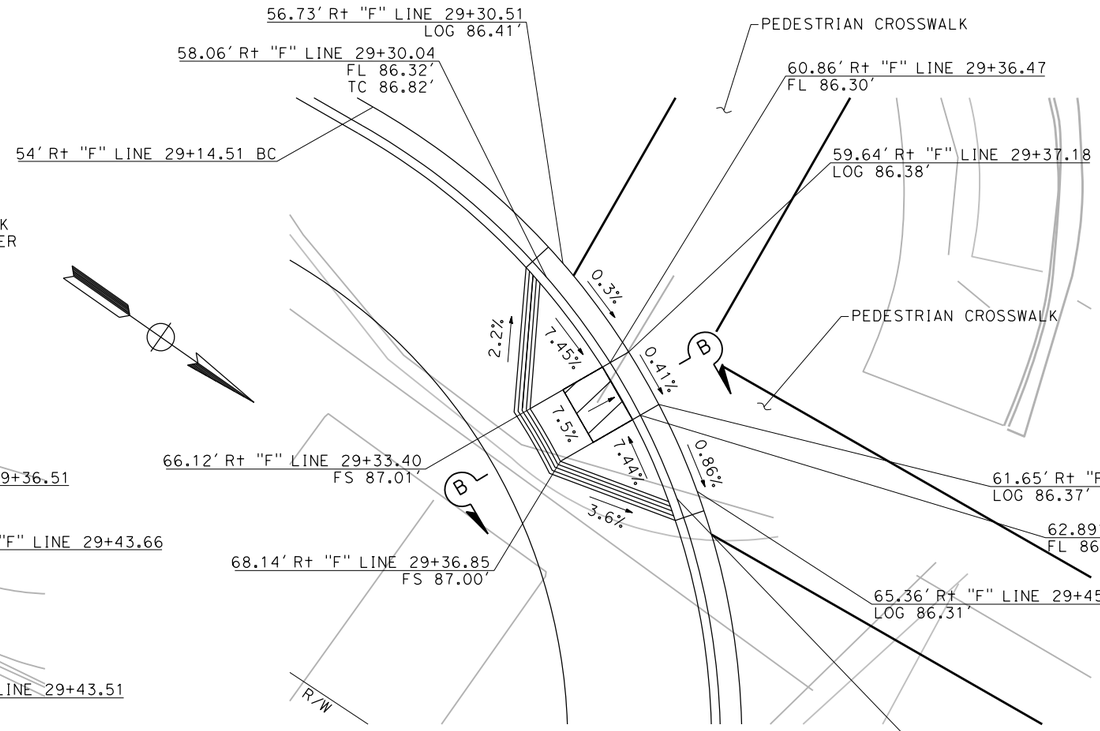

NB "F" LINE 29+50

CR3
CITY TYPE 1
CURB RAMP

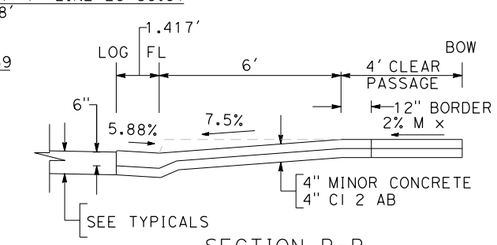

SECTION B-B
NO SCALE

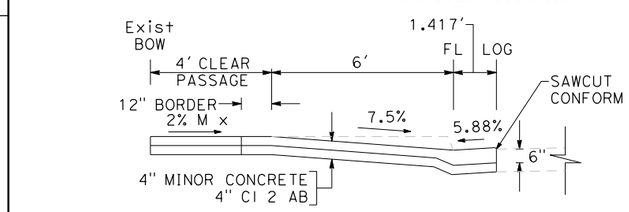

SECTION A-A
NO SCALE

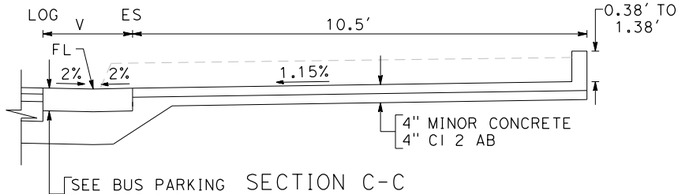

SECTION C-C
NO SCALE

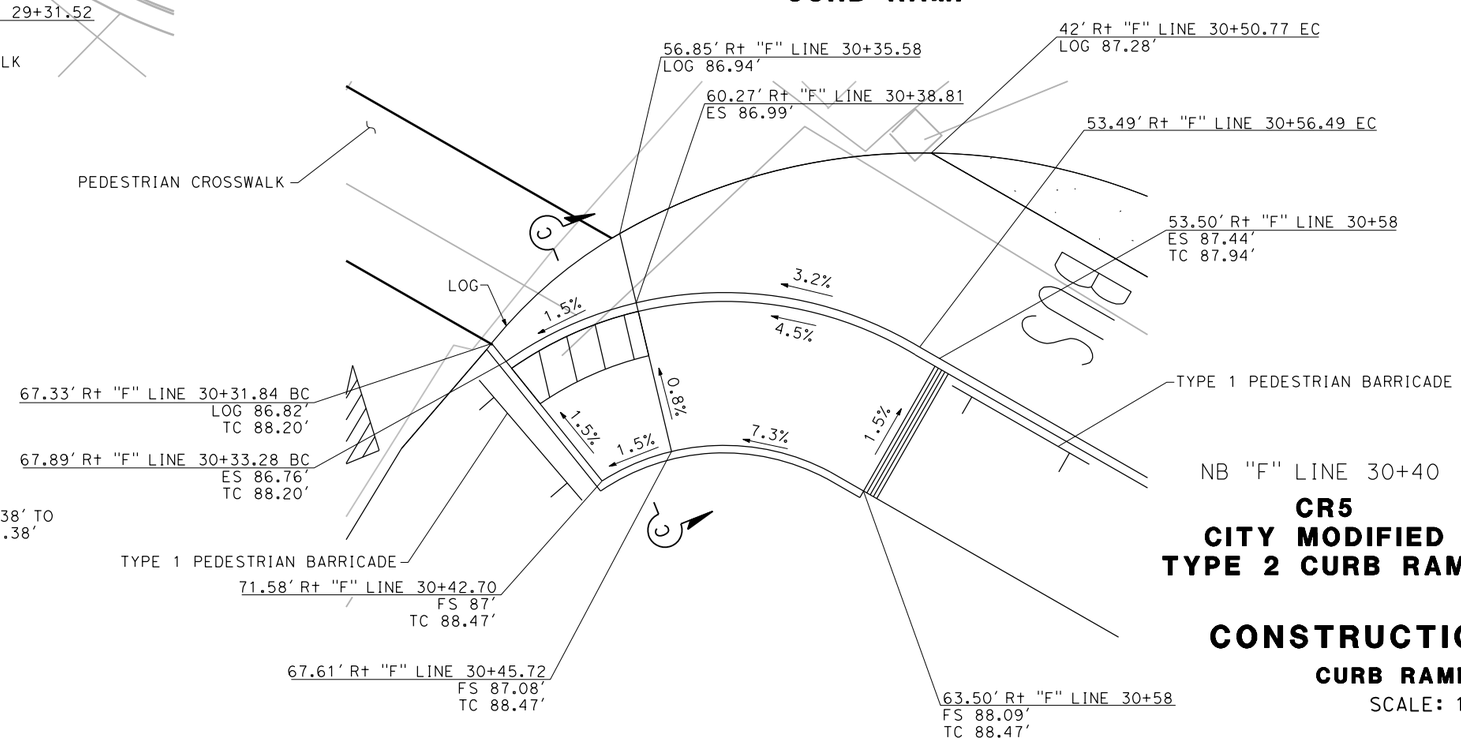

NB "F" LINE 30+40

CR5
CITY MODIFIED
TYPE 2 CURB RAMP

CONSTRUCTION DETAILS

CURB RAMP DETAILS

SCALE: 1" = 5'

C-22

REVISED BY	DATE REVISED
J.V.	02/15/22

CALCULATED-DESIGNED BY: JAMEY VALDIVIA
CHECKED BY: CARL GIBSON III
SUPERVISOR: CARL GIBSON III
CONSULTANT FUNCTIONAL SUPERVISOR: CARL GIBSON III

STATE OF CALIFORNIA - DEPARTMENT OF TRANSPORTATION
Caltrans

X:\SR 37_FAIRGROUNDS DRIVE\000_CAD\Sheets\013-Const_Details\044A4414ga022.dgn

LAST REVISION 00-00-00
DATE PLOTTED => 9/2/2022
TIME PLOTTED => 3:42:54 PM

Dist	COUNTY	ROUTE	POST MILES TOTAL PROJECT	SHEET No.	TOTAL SHEETS
04	Sol	37	10.9		

REGISTERED CIVIL ENGINEER DATE

PLANS APPROVAL DATE

REGISTERED PROFESSIONAL ENGINEER No. Exp. CIVIL STATE OF CALIFORNIA

THE STATE OF CALIFORNIA OR ITS OFFICERS OR AGENTS SHALL NOT BE RESPONSIBLE FOR THE ACCURACY OR COMPLETENESS OF SCANNED COPIES OF THIS PLAN SHEET.

WMH CORPORATION
11070 WHITE ROCK RD
SUITE 140
RANCHO CORDOVA
CA 95670

SOLANO TRANSPORTATION AUTHORITY
1 HARBOR CENTER
SUITE 130
SUISUN CITY, CA 94585

PRELIMINARY PLANS SUBJECT TO REVISION

NOTES:

1. FOR ACCURATE RIGHT OF WAY DATA, CONTACT RIGHT OF WAY ENGINEERING AT THE DISTRICT OFFICE.
2. FOR ABBREVIATIONS, SEE CURB RAMP DETAILS.

LEGEND:

DETECTABLE WARNING SURFACE

ABBREVIATIONS:

LOG LIP OF GUTTER
TC TOP OF CURB

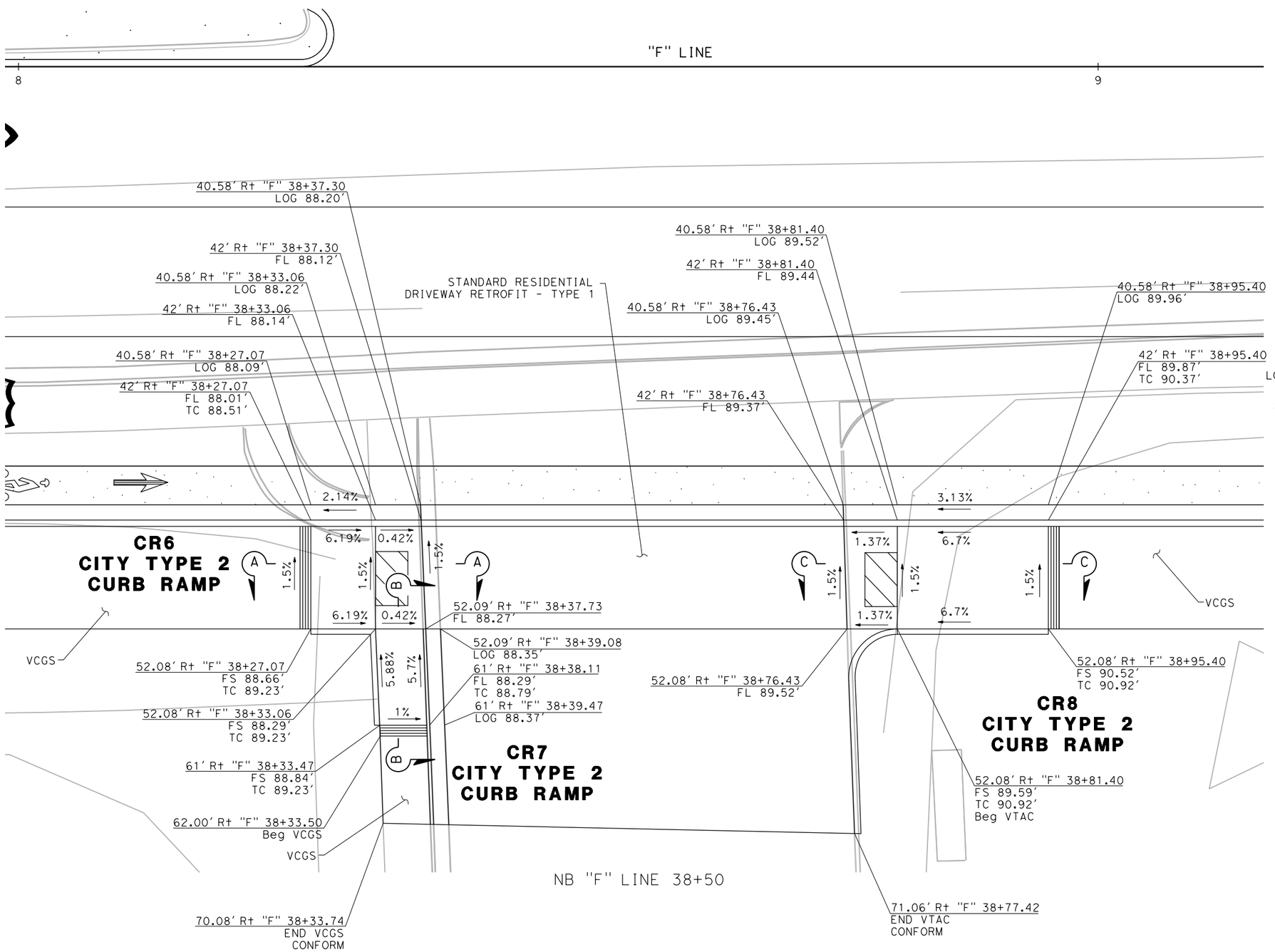

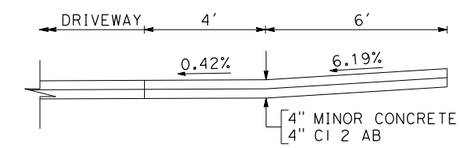

SECTION A-A
NO SCALE

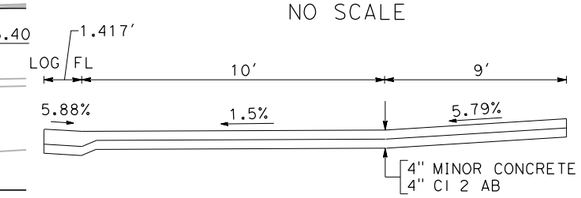

SECTION B-B
NO SCALE

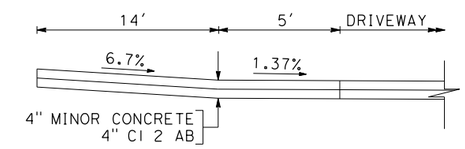

SECTION C-C
NO SCALE

CONSTRUCTION DETAILS

CURB RAMP DETAILS

SCALE: 1" = 5'

C-23

STATE OF CALIFORNIA - DEPARTMENT OF TRANSPORTATION

Caltrans

CONSULTANT FUNCTIONAL SUPERVISOR: CARL GIBSON III

CALCULATED-DESIGNED BY: JAMEY VALDIVIA | CHECKED BY: CARL GIBSON III

REVISED BY: J.V. | DATE REVISED: 02/15/22

X:\SR 37_FAIRGROUNDS DRIVE\000_CAD\Sheets\013-Const_Details\044A4414ga023.dgn

LAST REVISION 00-00-00 | DATE PLOTTED => 9/2/2022 | TIME PLOTTED => 3:42:56 PM

BORDER LAST REVISED 7/2/2010 | USERNAME => jvaldivia | DGN FILE => 044A4414ga023.dgn | RELATIVE BORDER SCALE IS IN INCHES 0 1 2 3 | UNIT 0738 | PROJECT NUMBER & PHASE 04000205841

Dist	COUNTY	ROUTE	POST MILES TOTAL PROJECT	SHEET No.	TOTAL SHEETS
04	Sol	37	10.9		

REGISTERED CIVIL ENGINEER DATE

PLANS APPROVAL DATE

REGISTERED PROFESSIONAL ENGINEER No. Exp. CIVIL STATE OF CALIFORNIA

THE STATE OF CALIFORNIA OR ITS OFFICERS OR AGENTS SHALL NOT BE RESPONSIBLE FOR THE ACCURACY OR COMPLETENESS OF SCANNED COPIES OF THIS PLAN SHEET.

WMH CORPORATION
11070 WHITE ROCK RD
SUITE 140
RANCHO CORDOVA
CA 95670

SOLANO TRANSPORTATION AUTHORITY
1 HARBOR CENTER
SUITE 130
SUISUN CITY, CA 94585

PRELIMINARY PLANS SUBJECT TO REVISION

NOTES:

1. FOR ACCURATE RIGHT OF WAY DATA, CONTACT RIGHT OF WAY ENGINEERING AT THE DISTRICT OFFICE.
2. FOR ABBREVIATIONS, SEE CURB RAMP DETAILS.

LEGEND:

DETECTABLE WARNING SURFACE

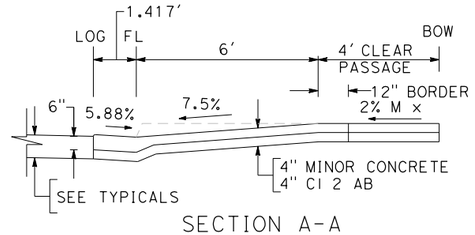

SECTION A-A
NO SCALE

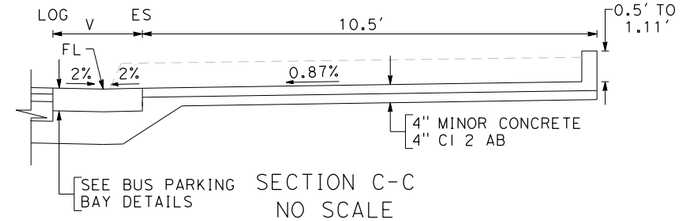

SECTION C-C
NO SCALE

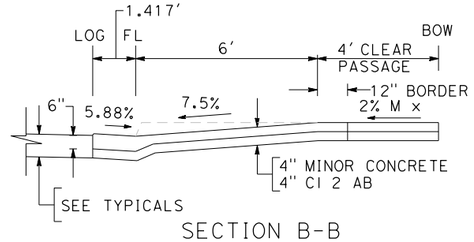

SECTION B-B
NO SCALE

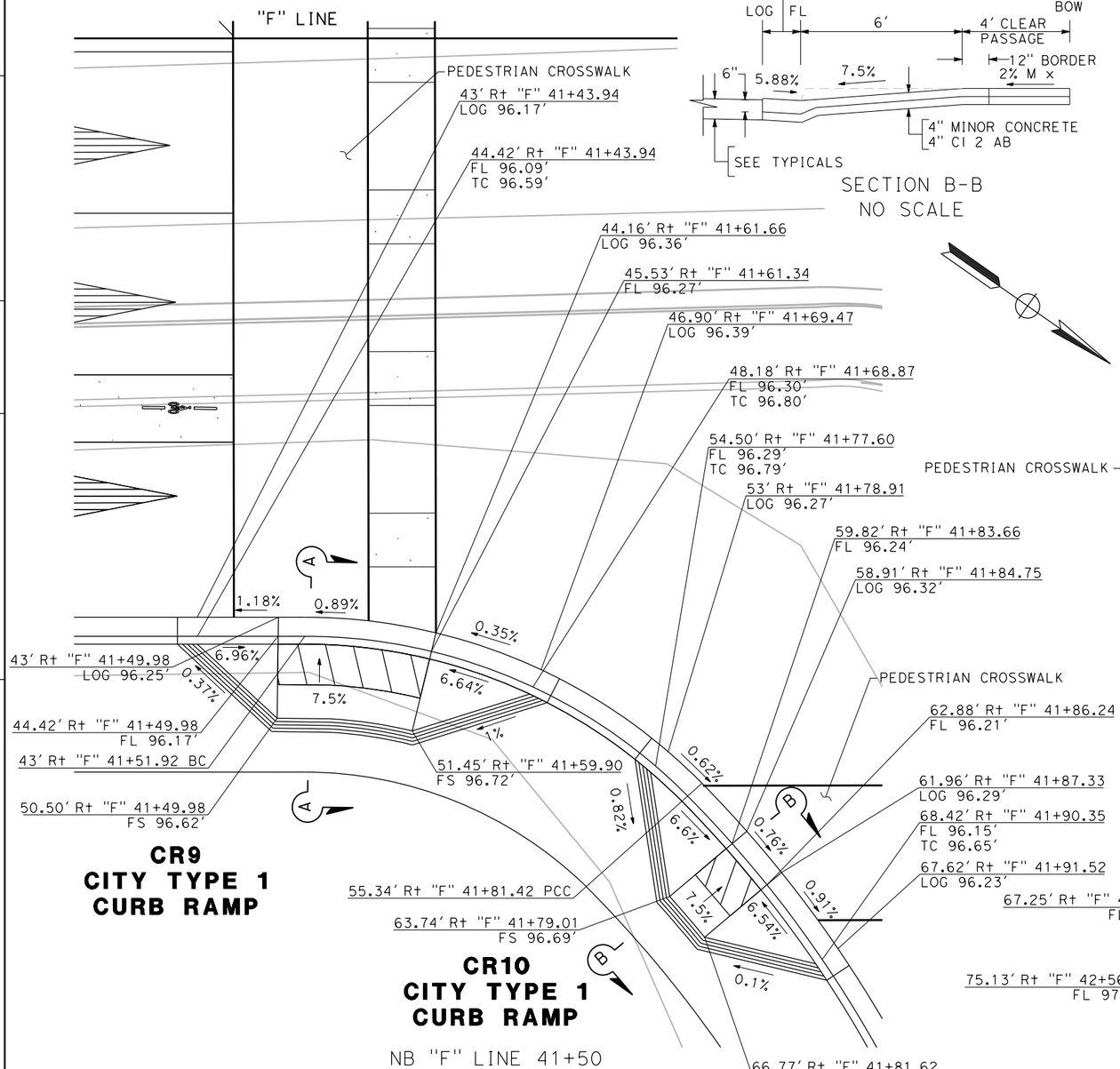

CR9
CITY TYPE 1
CURB RAMP

CR10
CITY TYPE 1
CURB RAMP

NB "F" LINE 41+50

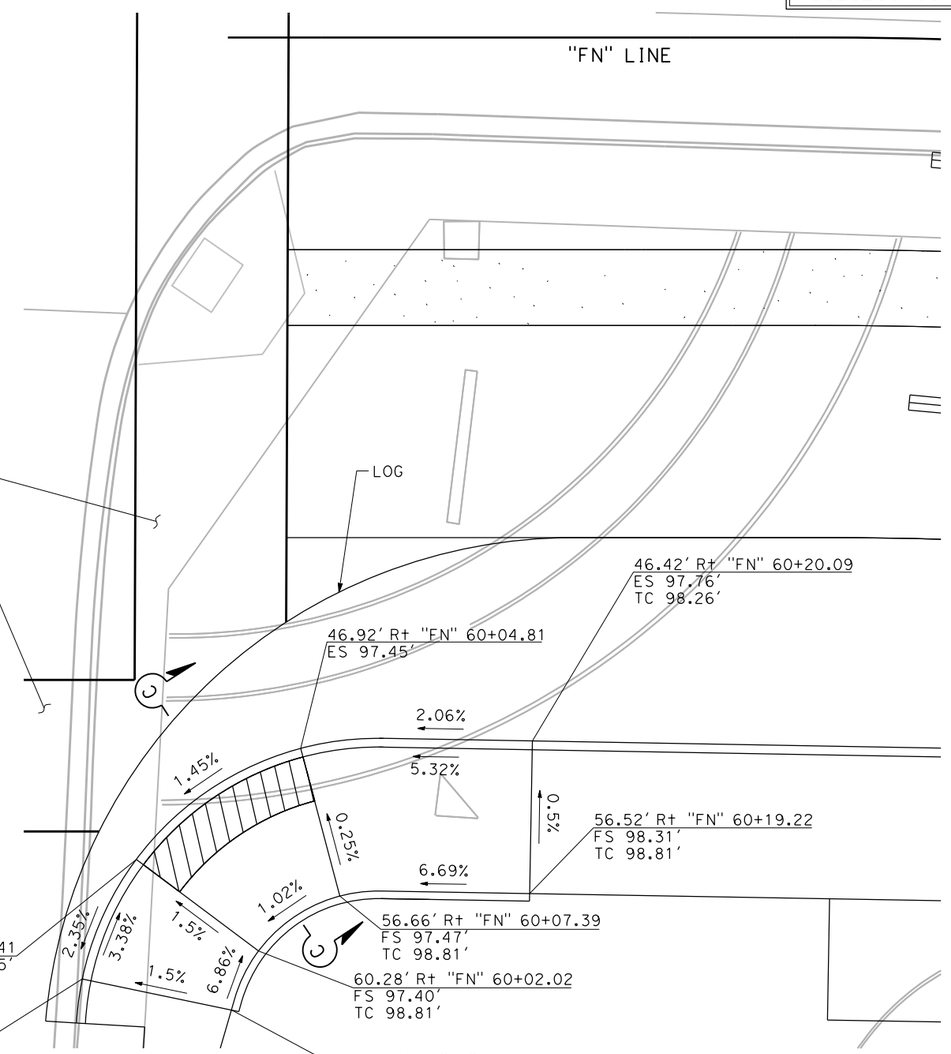

NB "FN" LINE 60+00

CR11
CASE C
CURN RAMP

CONSTRUCTION DETAILS

CURB RAMP DETAILS

SCALE: 1" = 5'

C-24

REVISED BY	DATE REVISED
J.V.	02/15/22

JAMEY VALDIVIA — CARL GIBSON III — CALCULATED-DESIGNED BY
CHECKED BY
CARL GIBSON III — CONSULTANT FUNCTIONAL SUPERVISOR

STATE OF CALIFORNIA - DEPARTMENT OF TRANSPORTATION

Caltrans

X:\SR 37_FAIRGROUNDS DRIVE\000_CAD\Sheets\013-Const_Details\044A4414ga024.dgn

LAST REVISION 00-00-00 — DATE PLOTTED => 9/2/2022 — TIME PLOTTED => 3:42:59 PM

BORDER LAST REVISED 7/2/2010 | USERNAME => jvaldivia | DGN FILE => 044A4414ga024.dgn | RELATIVE BORDER SCALE IS IN INCHES 0 1 2 3 | UNIT 0738 | PROJECT NUMBER & PHASE 04000205841

Dist	COUNTY	ROUTE	POST MILES TOTAL PROJECT	SHEET No.	TOTAL SHEETS
04	Sol	37	10.9		

REGISTERED CIVIL ENGINEER DATE

PLANS APPROVAL DATE

REGISTERED PROFESSIONAL ENGINEER No. Exp. CIVIL STATE OF CALIFORNIA

THE STATE OF CALIFORNIA OR ITS OFFICERS OR AGENTS SHALL NOT BE RESPONSIBLE FOR THE ACCURACY OR COMPLETENESS OF SCANNED COPIES OF THIS PLAN SHEET.

WMH CORPORATION
11070 WHITE ROCK RD
SUITE 140
RANCHO CORDOVA
CA 95670

SOLANO TRANSPORTATION AUTHORITY
1 HARBOR CENTER
SUITE 130
SUISUN CITY, CA 94585

PRELIMINARY PLANS SUBJECT TO REVISION

NOTES:

1. FOR ACCURATE RIGHT OF WAY DATA, CONTACT RIGHT OF WAY ENGINEERING AT THE DISTRICT OFFICE.
2. FOR ABBREVIATIONS, SEE CURB RAMP DETAILS.

LEGEND:

DETECTABLE WARNING SURFACE

ABBREVIATIONS:

LOG LIP OF GUTTER
TC TOP OF CURB

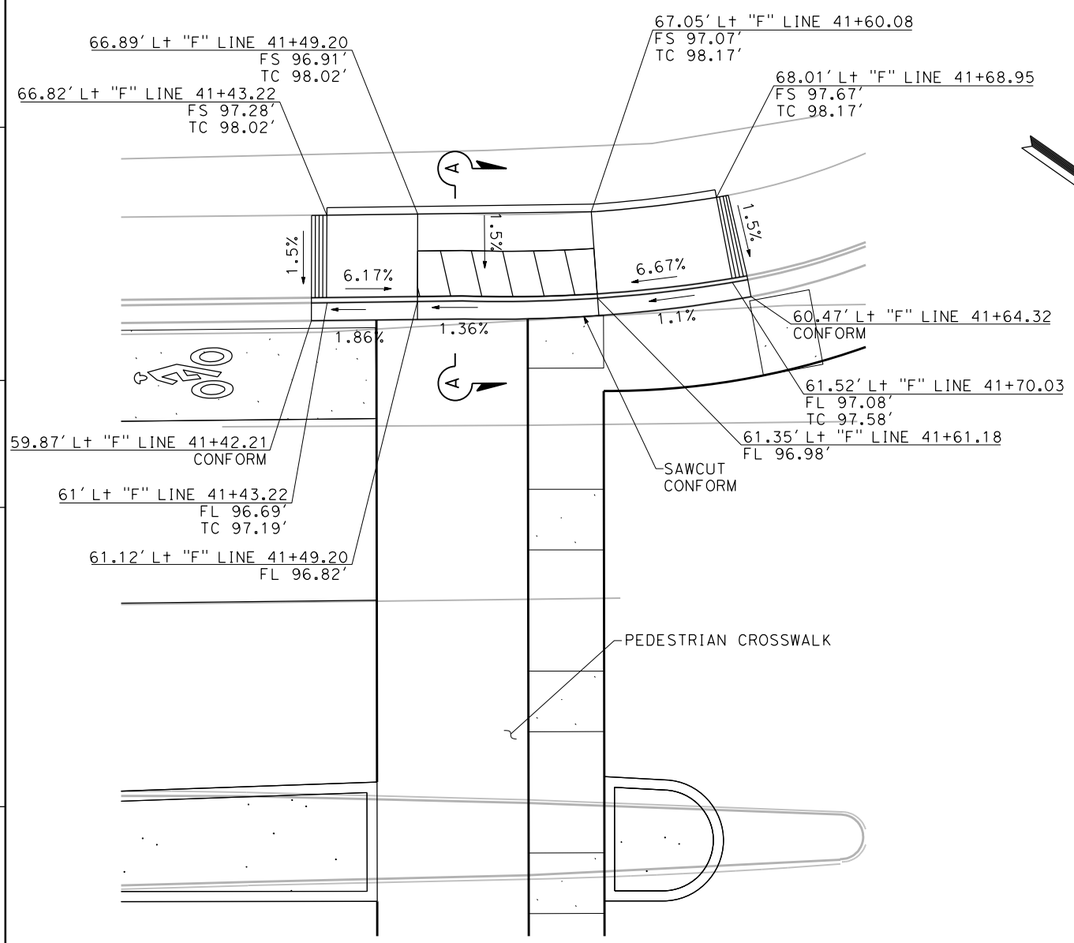

SB "F" LINE 41+50

CR12
CITY TYPE 2
CURB RAMP

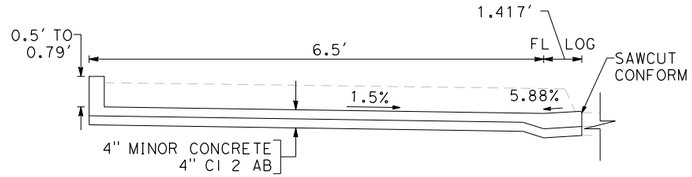

SECTION B-B
NO SCALE

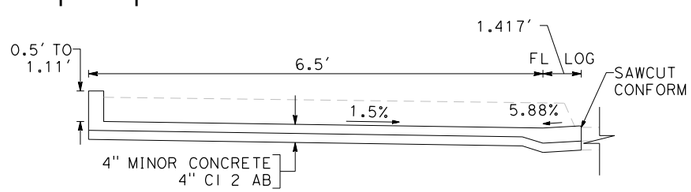

SECTION A-A
NO SCALE

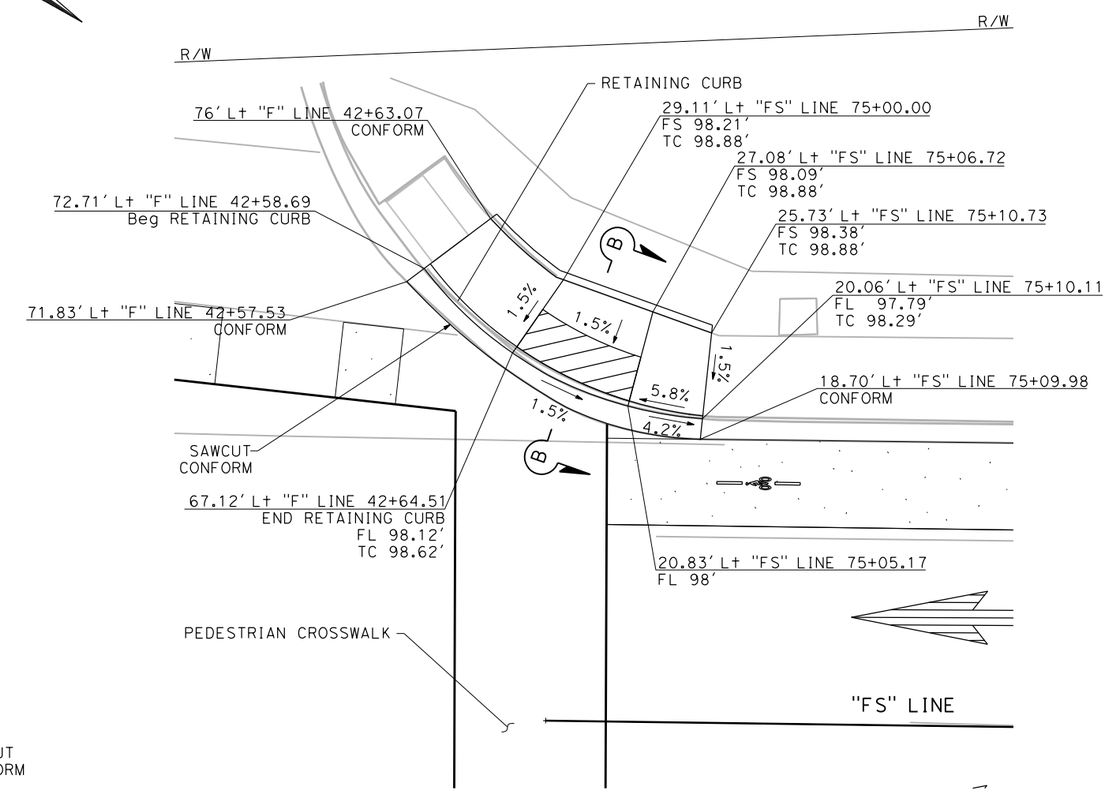

SB "FS" LINE 75+00

CR13
CASE C
CURB RAMP

CONSTRUCTION DETAILS

CURB RAMP DETAILS

SCALE: 1" = 5′

C-25

REVISED BY	DATE REVISED	CALCULATED-DESIGNED BY	CHECKED BY	CONSULTANT FUNCTIONAL SUPERVISOR
J.V.	02/15/22	JAMEY VALDIVIA	CARL GIBSON III	CARL GIBSON III

STATE OF CALIFORNIA - DEPARTMENT OF TRANSPORTATION

X:\SR 37_FAIRGROUNDS DRIVE\000_CAD\Sheets\013-Const_Details\044A4414ga025.dgn

LAST REVISION 00-00-00 | DATE PLOTTED => 9/2/2022 | TIME PLOTTED => 3:43:11 PM

Dist	COUNTY	ROUTE	POST MILES TOTAL PROJECT	SHEET No.	TOTAL SHEETS
04	Sol	37	10.9		

REGISTERED CIVIL ENGINEER DATE

PLANS APPROVAL DATE

REGISTERED PROFESSIONAL ENGINEER No. Exp. CIVIL STATE OF CALIFORNIA

THE STATE OF CALIFORNIA OR ITS OFFICERS OR AGENTS SHALL NOT BE RESPONSIBLE FOR THE ACCURACY OR COMPLETENESS OF SCANNED COPIES OF THIS PLAN SHEET.

WMH CORPORATION
11070 WHITE ROCK RD
SUITE 140
RANCHO CORDOVA
CA 95670

SOLANO TRANSPORTATION AUTHORITY
1 HARBOR CENTER
SUITE 130
SUISUN CITY, CA 94585

PRELIMINARY PLANS SUBJECT TO REVISION

NOTES:

1. FOR ACCURATE RIGHT OF WAY DATA, CONTACT RIGHT OF WAY ENGINEERING AT THE DISTRICT OFFICE.
2. FOR ABBREVIATIONS, SEE CURB RAMP DETAILS.

LEGEND:

DETECTABLE WARNING SURFACE

ABBREVIATIONS:

LOG LIP OF GUTTER
TC TOP OF CURB

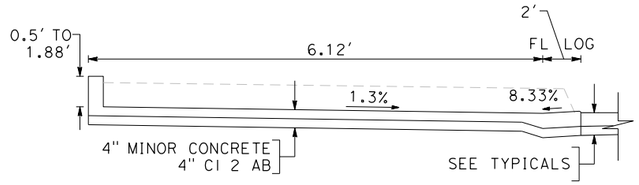

SECTION A-A
NO SCALE

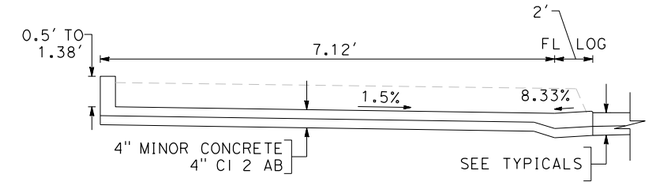

SECTION B-B
NO SCALE

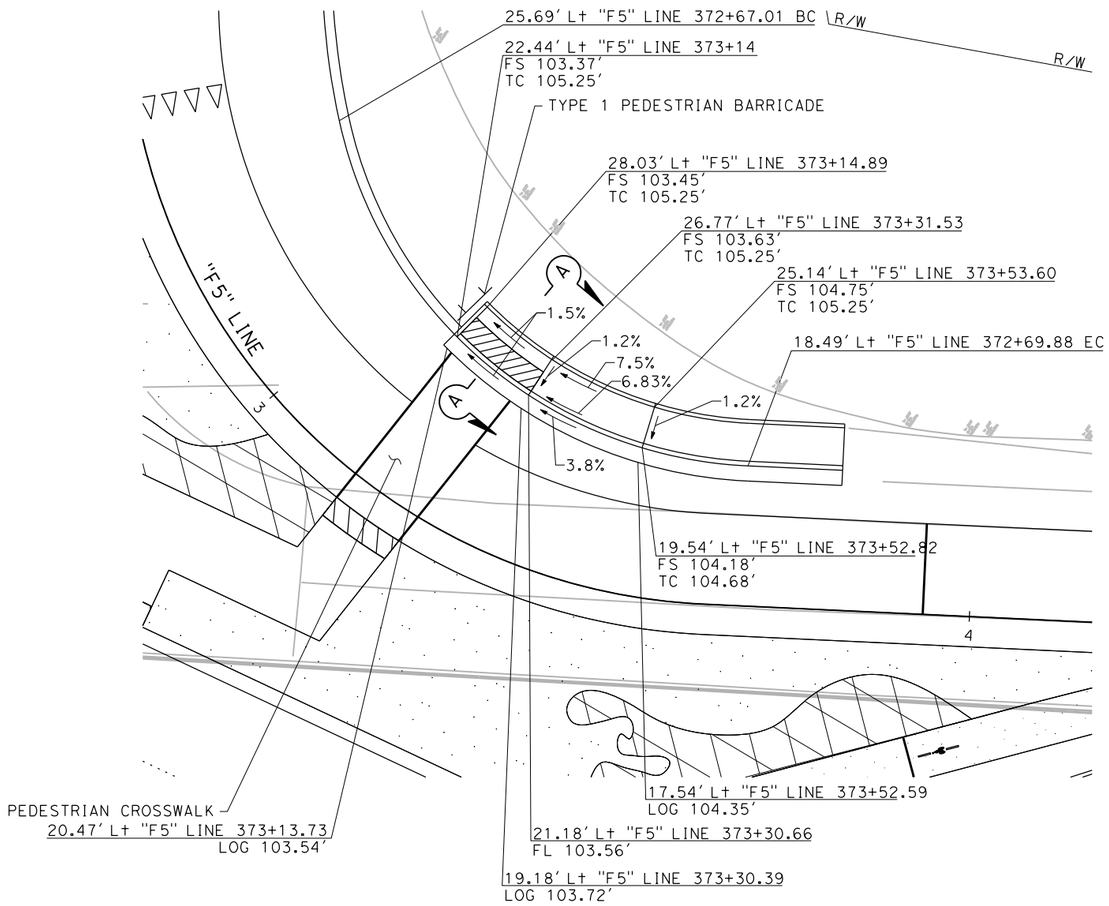

CR14
CASE CH CURB RAMP

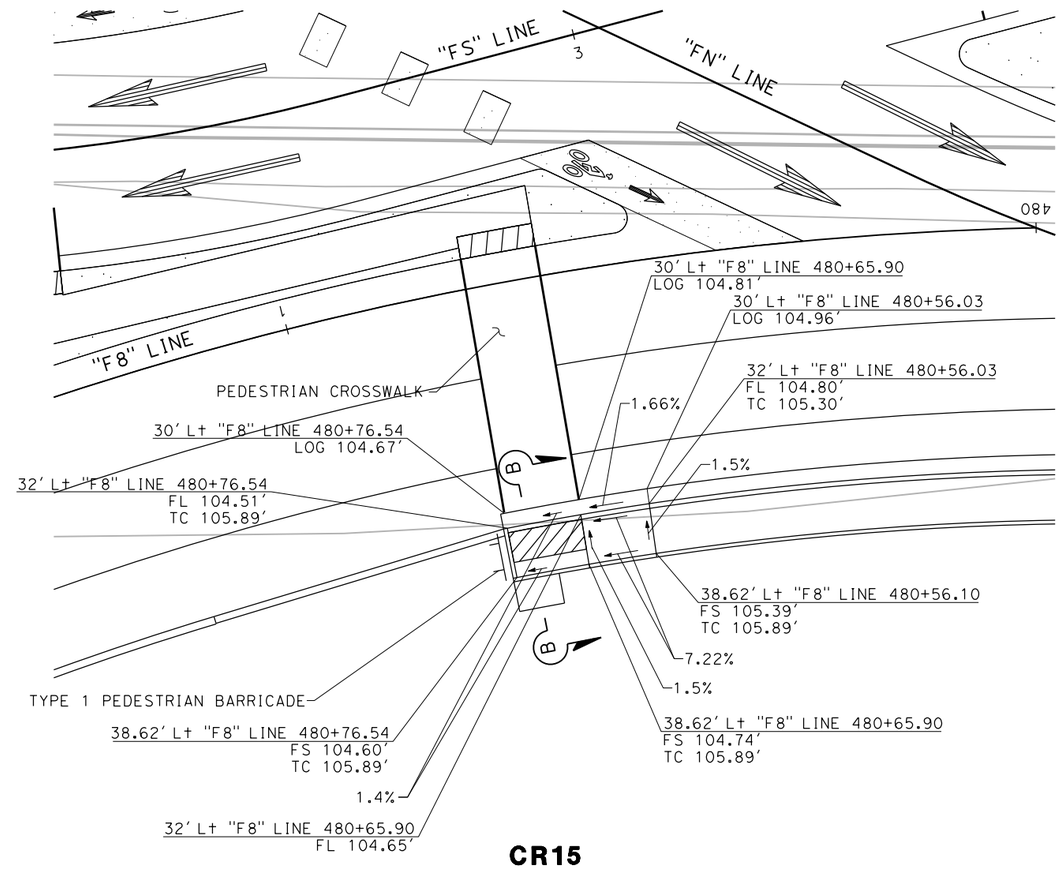

CR15
CASE CH CURB RAMP

CONSTRUCTION DETAILS

CURB RAMP DETAILS

SCALE: 1" = 10'

C-26

REVISED BY	DATE REVISED
J.V.	02/15/22

JAMEY VALDIVIA — CARL GIBSON III — CALCULATED-DESIGNED BY — CHECKED BY

CARL GIBSON III — CONSULTANT FUNCTIONAL SUPERVISOR

STATE OF CALIFORNIA - DEPARTMENT OF TRANSPORTATION

Caltrans

X:\SR 37_FAIRGROUNDS DRIVE\000_CAD\Sheets\013-Const_Details\044A4414ga026.dgn

LAST REVISION 00-00-00 — DATE PLOTTED => 9/2/2022 — TIME PLOTTED => 3:43:43 PM

BORDER LAST REVISED 7/2/2010 | USERNAME => jvaldivia | DGN FILE => 044A4414ga026.dgn | RELATIVE BORDER SCALE IS IN INCHES 0 1 2 3 | UNIT 0738 | PROJECT NUMBER & PHASE 04000205841

Dist	COUNTY	ROUTE	POST MILES TOTAL PROJECT	SHEET No.	TOTAL SHEETS
04	Sol	37	10.9		

REGISTERED CIVIL ENGINEER DATE

PLANS APPROVAL DATE

REGISTERED PROFESSIONAL ENGINEER No. Exp. CIVIL STATE OF CALIFORNIA

THE STATE OF CALIFORNIA OR ITS OFFICERS OR AGENTS SHALL NOT BE RESPONSIBLE FOR THE ACCURACY OR COMPLETENESS OF SCANNED COPIES OF THIS PLAN SHEET.

WMH CORPORATION
11070 WHITE ROCK RD
SUITE 140
RANCHO CORDOVA
CA 95670

SOLANO TRANSPORTATION AUTHORITY
1 HARBOR CENTER
SUITE 130
SUISUN CITY, CA 94585

PRELIMINARY PLANS SUBJECT TO REVISION

NOTES:

1. FOR ACCURATE RIGHT OF WAY DATA, CONTACT RIGHT OF WAY ENGINEERING AT THE DISTRICT OFFICE.
2. FOR ABBREVIATIONS, SEE CURB RAMP DETAILS.

ABBREVIATIONS:

BOW BACK OF WALK
LOG LIP OF GUTTER
TC TOP OF CURB

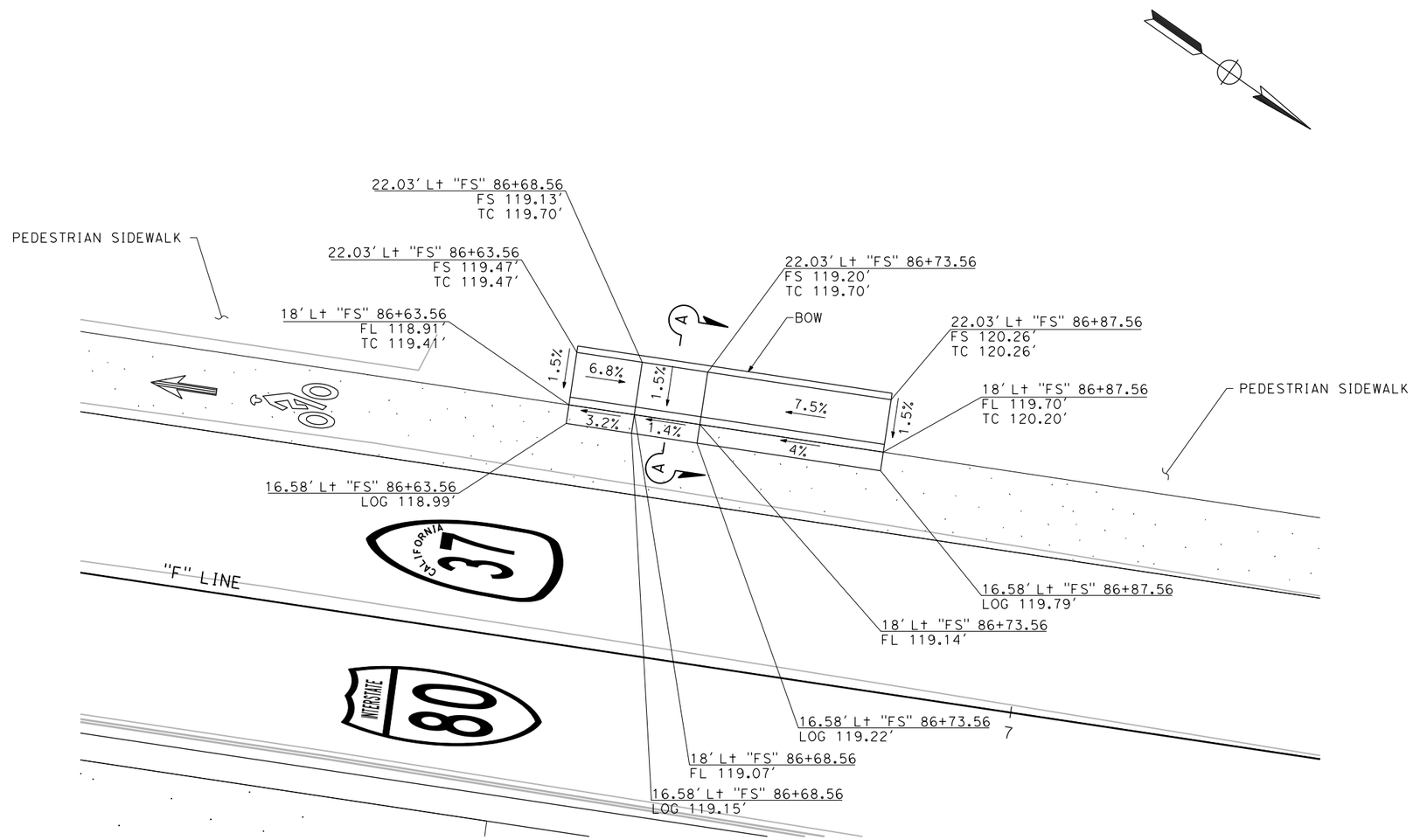

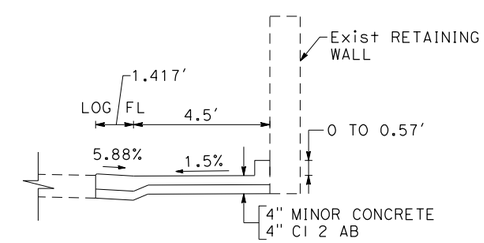

SECTION A-A
NO SCALE

CR16
CITY TYPE 2
CURB RAMP

CONSTRUCTION DETAILS

CURB RAMP DETAILS

SCALE: 1" = 5'

C-27

REVISED BY	DATE REVISED
J.V.	02/15/22

CALCULATED-DESIGNED BY: JAMEY VALDIVIA
CHECKED BY: CARL GIBSON III
CONSULTANT FUNCTIONAL SUPERVISOR: CARL GIBSON III

STATE OF CALIFORNIA - DEPARTMENT OF TRANSPORTATION
Caltrans

X:\SR 37_FAIRGROUNDS DRIVE\000_CAD\Sheets\013-Const_Details\044A4414ga027.dgn

LAST REVISION 00-00-00
DATE PLOTTED => 9/2/2022
TIME PLOTTED => 3:44:21 PM

Dist	COUNTY	ROUTE	POST MILES TOTAL PROJECT	SHEET No.	TOTAL SHEETS
04	Sol	37	10.9		

REGISTERED CIVIL ENGINEER DATE

PLANS APPROVAL DATE

REGISTERED PROFESSIONAL ENGINEER No. Exp. CIVIL STATE OF CALIFORNIA

THE STATE OF CALIFORNIA OR ITS OFFICERS OR AGENTS SHALL NOT BE RESPONSIBLE FOR THE ACCURACY OR COMPLETENESS OF SCANNED COPIES OF THIS PLAN SHEET.

WMH CORPORATION
11070 WHITE ROCK RD
SUITE 140
RANCHO CORDOVA
CA 95670

SOLANO TRANSPORTATION AUTHORITY
1 HARBOR CENTER
SUITE 130
SUISUN CITY, CA 94585

PRELIMINARY PLANS SUBJECT TO REVISION

NOTE:

FOR ALL BARRIER DETAILS NOT SHOWN, SEE CONCRETE BARRIER TYPE 60MC.

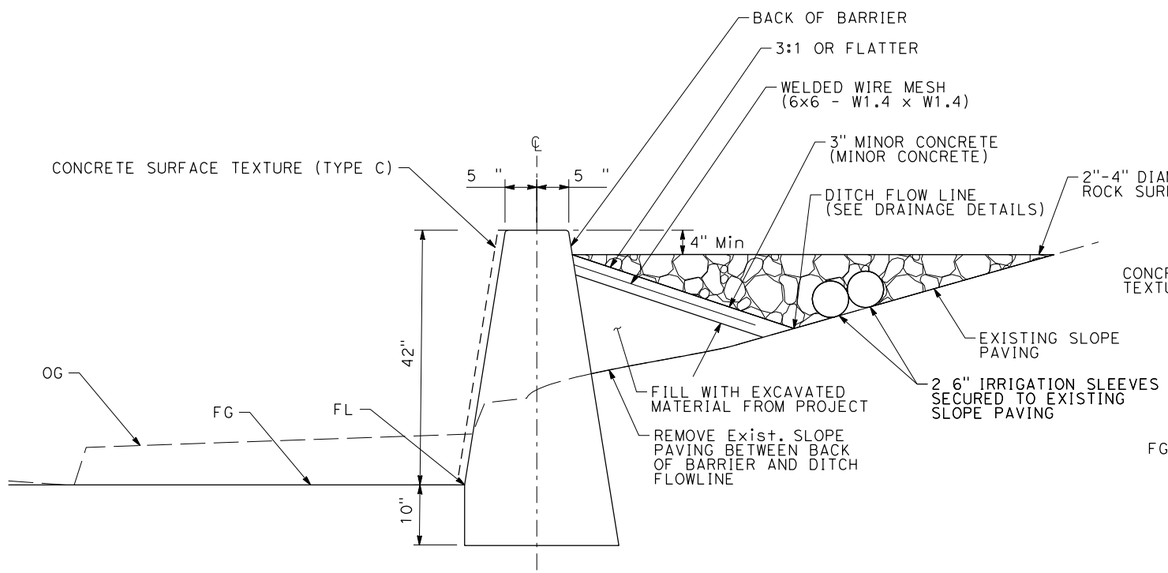

CONCRETE BARRIER (TYPE 60MC)

SECTION A-A
"FN" 64+64.94 TO 66+42.01
"FS" 78+81.22 TO 80+45.17

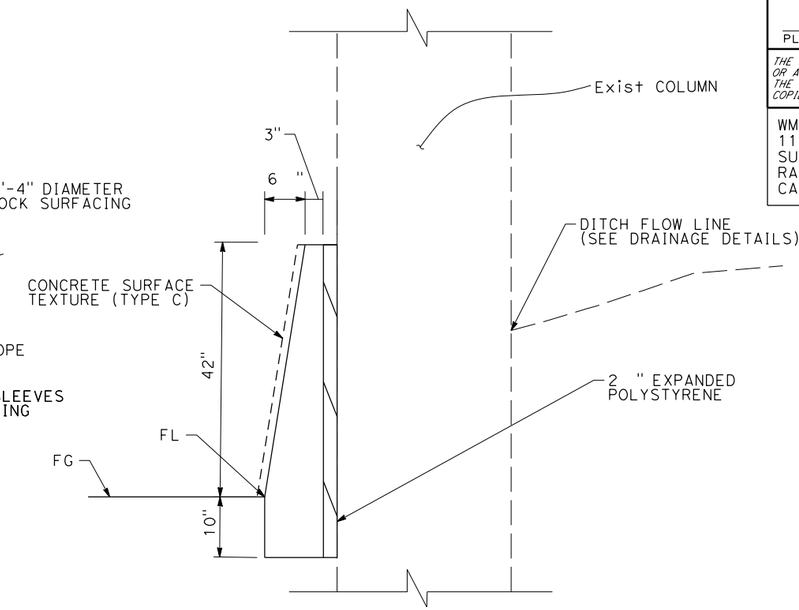

CONCRETE BARRIER (TYPE 60MC M)

SECTION B-B

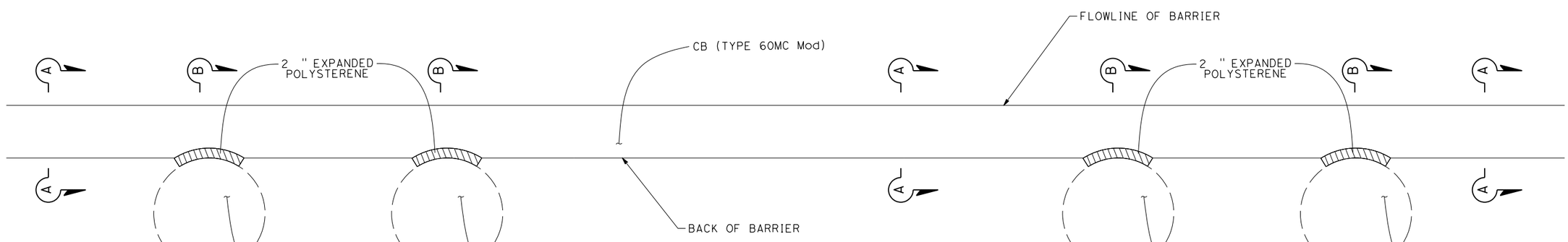

PLAN VIEW

CONSTRUCTION DETAILS

CONCRETE BARRIER (TYPE 60MC M) DETAIL

NO SCALE

C-28

REVISED BY	DATE REVISED	JAMEY VALDIVIA	CARL GIBSON III	CALCULATED-DESIGNED BY	CHECKED BY	CONSULTANT FUNCTIONAL SUPERVISOR	CARL GIBSON III
J.V.	02/15/22						

STATE OF CALIFORNIA - DEPARTMENT OF TRANSPORTATION

Caltrans

X:\SR 37_FAIRGROUNDS DRIVE\000_CAD\Sheets\013-Const_Details\044A4414ga028.dgn

LAST REVISION 00-00-00 | DATE PLOTTED => 9/2/2022 | TIME PLOTTED => 3:44:45 PM

Dist	COUNTY	ROUTE	POST MILES TOTAL PROJECT	SHEET No.	TOTAL SHEETS
04	Sol	37	10.9		

REGISTERED CIVIL ENGINEER DATE

PLANS APPROVAL DATE

REGISTERED PROFESSIONAL ENGINEER No. Exp. CIVIL STATE OF CALIFORNIA

THE STATE OF CALIFORNIA OR ITS OFFICERS OR AGENTS SHALL NOT BE RESPONSIBLE FOR THE ACCURACY OR COMPLETENESS OF SCANNED COPIES OF THIS PLAN SHEET.

WMH CORPORATION
11070 WHITE ROCK RD
SUITE 140
RANCHO CORDOVA
CA 95670

SOLANO TRANSPORTATION AUTHORITY
1 HARBOR CENTER
SUITE 130
SUISUN CITY, CA 94585

PRELIMINARY PLANS SUBJECT TO REVISION

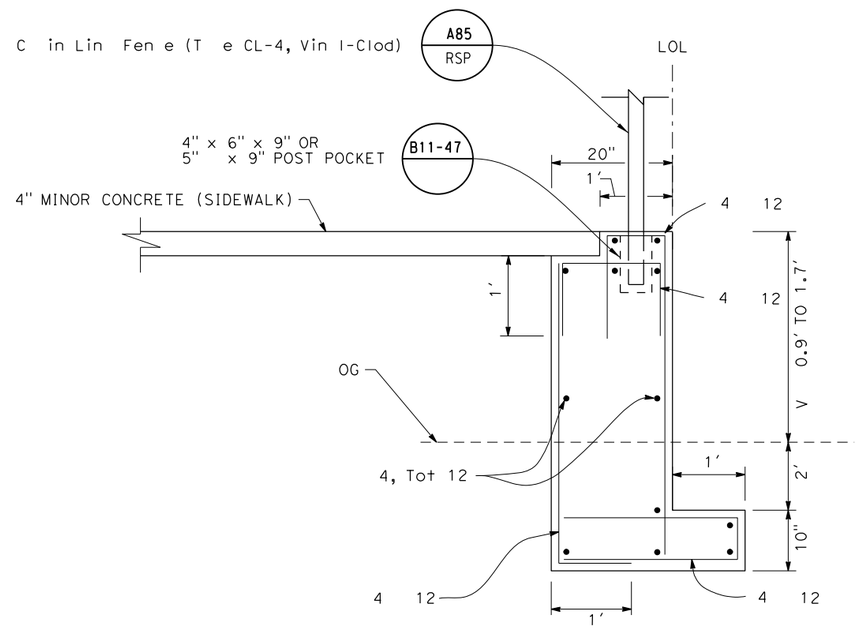

RETAINING CURB (TYPE A) WITH FENCE

CONSTRUCTION DETAILS

RETAINING CURB (TYPE A)

NO SCALE

C-29

STATE OF CALIFORNIA - DEPARTMENT OF TRANSPORTATION

Caltrans

CONSULTANT FUNCTIONAL SUPERVISOR: CARL GIBSON III

CALCULATED-DESIGNED BY: JAMEY VALDIVIA

CHECKED BY: CARL GIBSON III

REVISED BY: J.V.

DATE REVISED: 02/15/22

X:\SR 37_FAIRGROUNDS DRIVE\000_CAD\Sheets\013-Const_Details\044A4414ga029.dgn

LAST REVISION 00-00-00

DATE PLOTTED => 9/2/2022
TIME PLOTTED => 3:45:00 PM

BORDER LAST REVISED 7/2/2010

USERNAME => jvaldivia
DGN FILE => 044A4414ga029.dgn

RELATIVE BORDER SCALE IS IN INCHES 0 1 2 3

UNIT 0738

PROJECT NUMBER & PHASE 04000205841

Dist	COUNTY	ROUTE	POST MILES TOTAL PROJECT	SHEET No.	TOTAL SHEETS
04	Sol	37	10.9		

REGISTERED CIVIL ENGINEER DATE

PLANS APPROVAL DATE

REGISTERED PROFESSIONAL ENGINEER No. Exp. CIVIL STATE OF CALIFORNIA

THE STATE OF CALIFORNIA OR ITS OFFICERS OR AGENTS SHALL NOT BE RESPONSIBLE FOR THE ACCURACY OR COMPLETENESS OF SCANNED COPIES OF THIS PLAN SHEET.

WMH CORPORATION
11070 WHITE ROCK RD
SUITE 140
RANCHO CORDOVA
CA 95670

SOLANO TRANSPORTATION AUTHORITY
1 HARBOR CENTER
SUITE 130
SUISUN CITY, CA 94585

PRELIMINARY PLANS SUBJECT TO REVISION

NOTE:

DIKES AND CONCRETE BARRIERS SHALL NOT BE PLACED ON TOP OF RHMA-O.

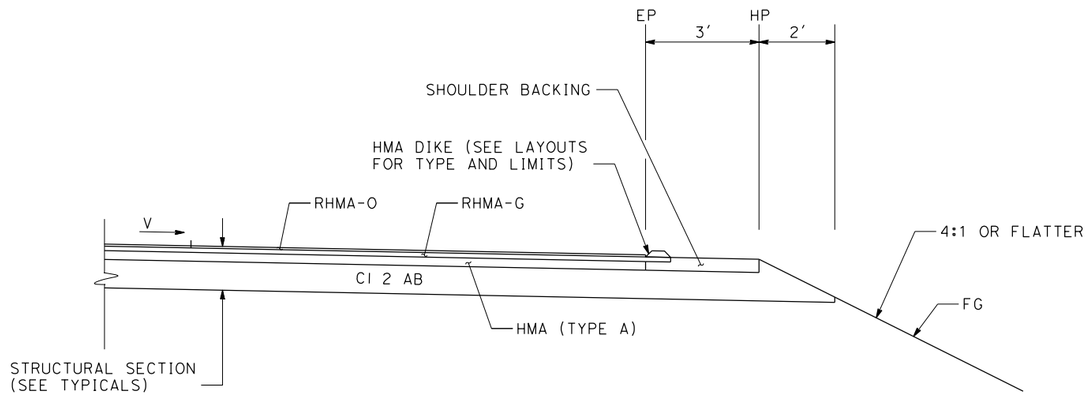

FILL

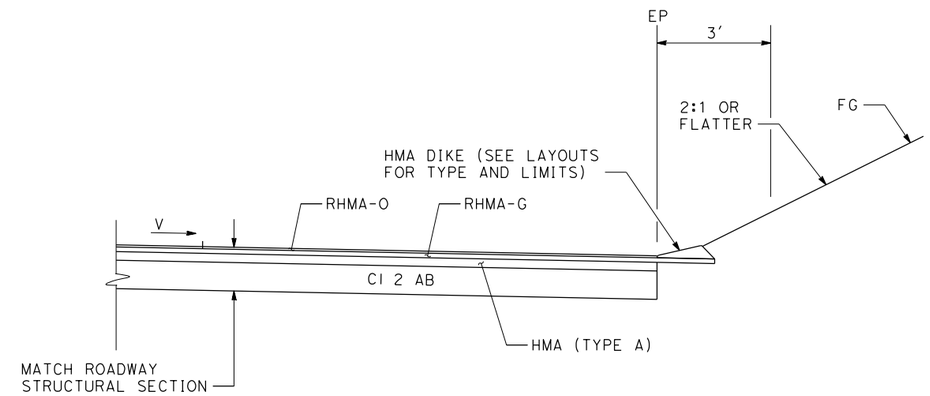

CUT

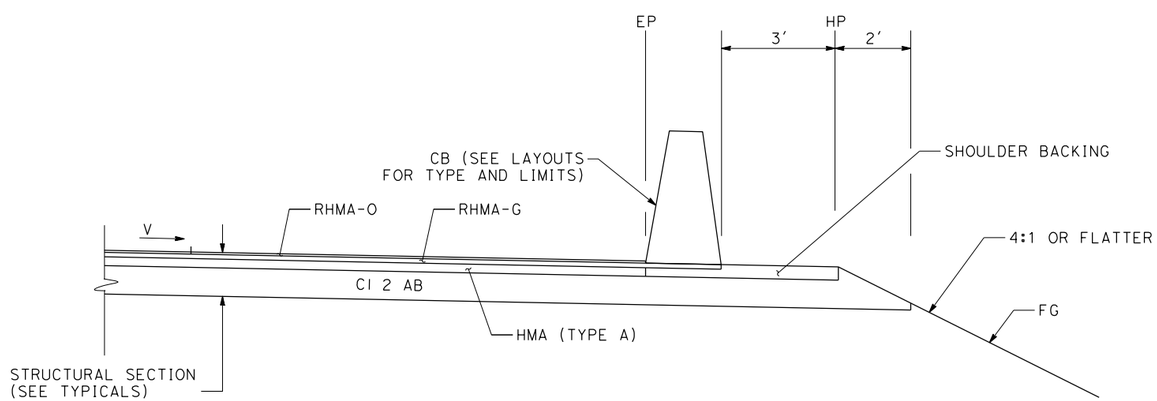

FILL

CONSTRUCTION DETAILS

RHMA-G DETAIL

C-30

REVISED BY	DATE REVISED
J.V.	02/15/22

JAMEY VALDIVIA — CARL GIBSON III — CALCULATED-DESIGNED BY — CHECKED BY

CARL GIBSON III — CONSULTANT FUNCTIONAL SUPERVISOR

STATE OF CALIFORNIA - DEPARTMENT OF TRANSPORTATION — Caltrans

X:\SR 37_FAIRGROUNDS DRIVE\000_CAD\Sheets\013-Const_Details\044A4414ga030.dgn

LAST REVISION 00-00-00 — DATE PLOTTED => 9/2/2022 — TIME PLOTTED => 3:45:03 PM

Dist	COUNTY	ROUTE	POST MILES TOTAL PROJECT	SHEET No.	TOTAL SHEETS
04	Sol	37	10.9		

REGISTERED CIVIL ENGINEER DATE

PLANS APPROVAL DATE

REGISTERED PROFESSIONAL ENGINEER No. Exp. CIVIL STATE OF CALIFORNIA

THE STATE OF CALIFORNIA OR ITS OFFICERS OR AGENTS SHALL NOT BE RESPONSIBLE FOR THE ACCURACY OR COMPLETENESS OF SCANNED COPIES OF THIS PLAN SHEET.

WMH CORPORATION
11070 WHITE ROCK RD
SUITE 140
RANCHO CORDOVA
CA 95670

SOLANO TRANSPORTATION AUTHORITY
1 HARBOR CENTER
SUITE 130
SUISUN CITY, CA 94585

PRELIMINARY PLANS SUBJECT TO REVISION

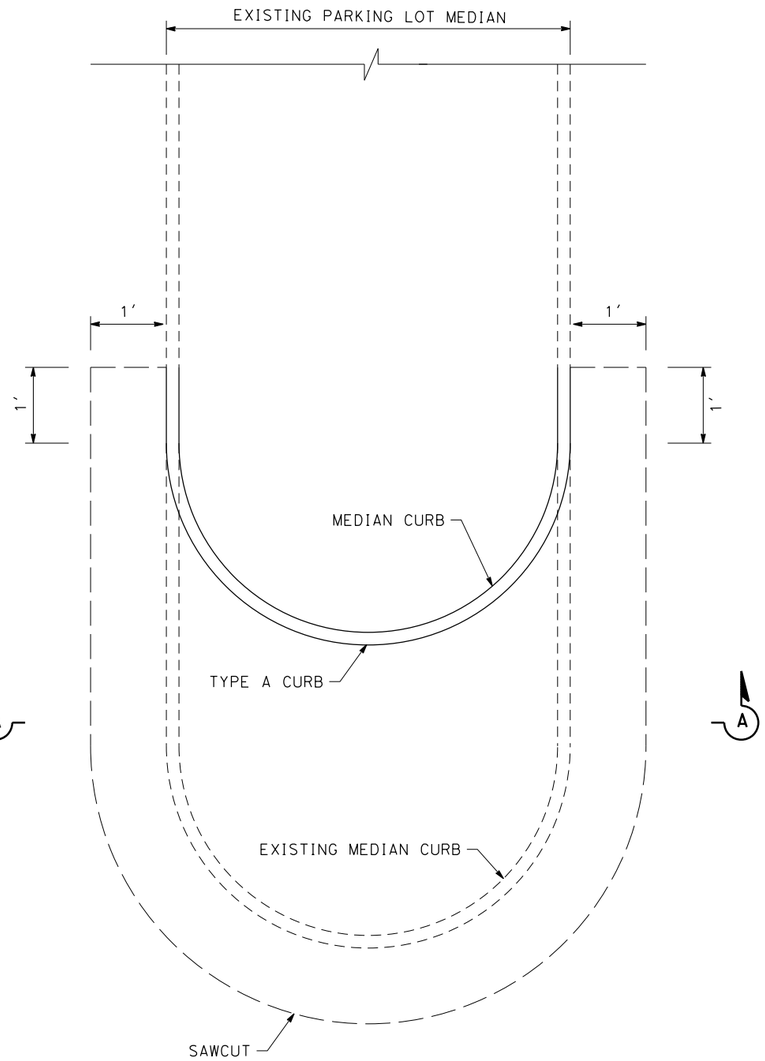

PLAN

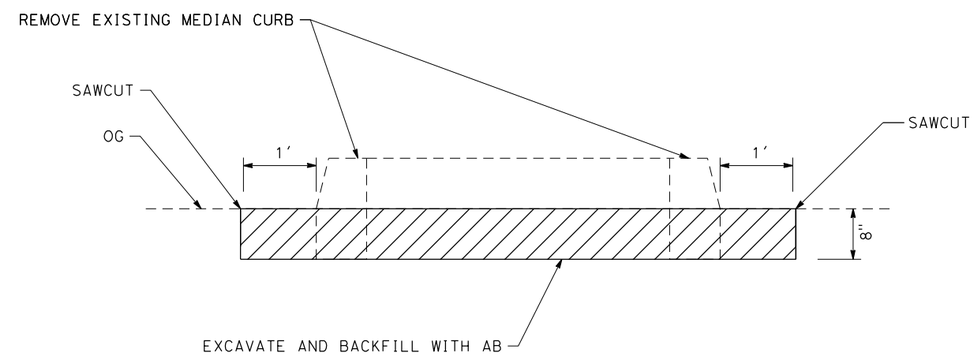

SECTION A-A

CONSTRUCTION DETAILS

PARKING LOT CURB MODIFICATION

NO SCALE

C-31

JAMEY VALDIVIA	REVISED BY J.V.
CARL GIBSON III	DATE REVISED 02/15/22
CALCULATED-DESIGNED BY	
CHECKED BY	
CONSULTANT FUNCTIONAL SUPERVISOR	CARL GIBSON III

STATE OF CALIFORNIA - DEPARTMENT OF TRANSPORTATION

Caltrans

X:\SR 37_FAIRGROUNDS DRIVE\000_CAD\Sheets\013-Const_Details\044A4414ga031.dgn

LAST REVISION 00-00-00 | DATE PLOTTED => 9/2/2022 TIME PLOTTED => 3:45:13 PM

BORDER LAST REVISED 7/2/2010 | USERNAME => jvaldivia DGN FILE => 044A4414ga031.dgn | RELATIVE BORDER SCALE IS IN INCHES 0 1 2 3 | UNIT 0738 | PROJECT NUMBER & PHASE 04000205841

Dist	COUNTY	ROUTE	POST MILES TOTAL PROJECT	SHEET No.	TOTAL SHEETS
04	Sol	37	10.9		

REGISTERED CIVIL ENGINEER DATE

PLANS APPROVAL DATE

REGISTERED PROFESSIONAL ENGINEER No. Exp. CIVIL STATE OF CALIFORNIA

THE STATE OF CALIFORNIA OR ITS OFFICERS OR AGENTS SHALL NOT BE RESPONSIBLE FOR THE ACCURACY OR COMPLETENESS OF SCANNED COPIES OF THIS PLAN SHEET.

WMH CORPORATION
11070 WHITE ROCK RD
SUITE 140
RANCHO CORDOVA
CA 95670

SOLANO TRANSPORTATION AUTHORITY
1 HARBOR CENTER
SUITE 130
SUISUN CITY, CA 94585

PRELIMINARY PLANS SUBJECT TO REVISION

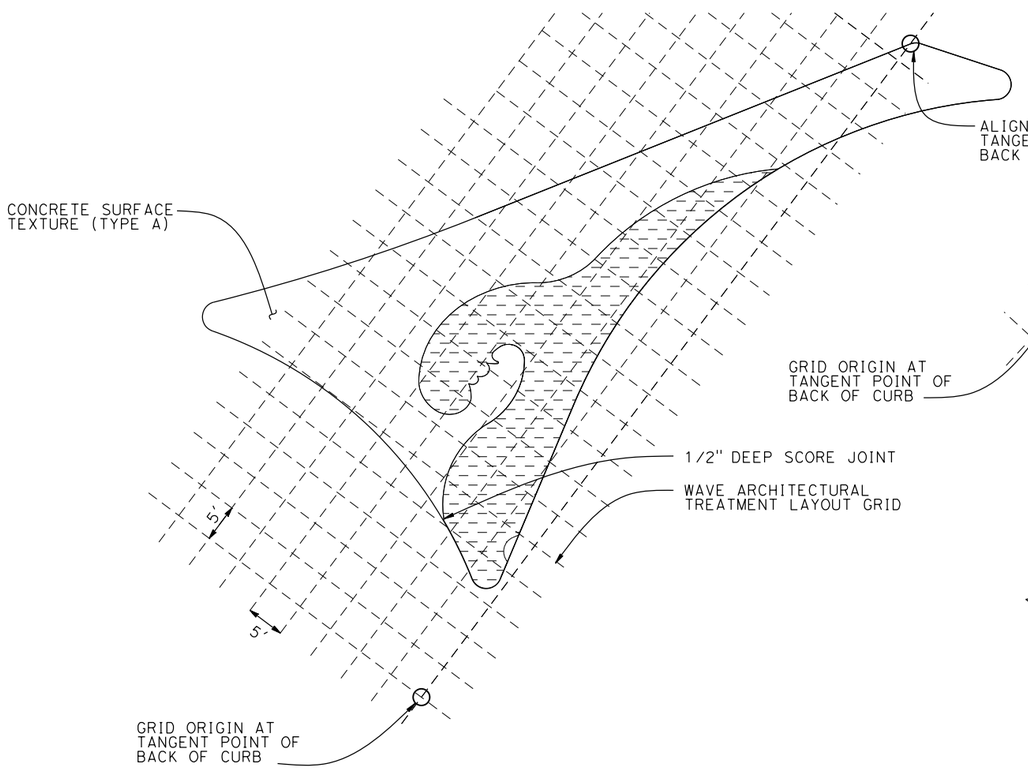

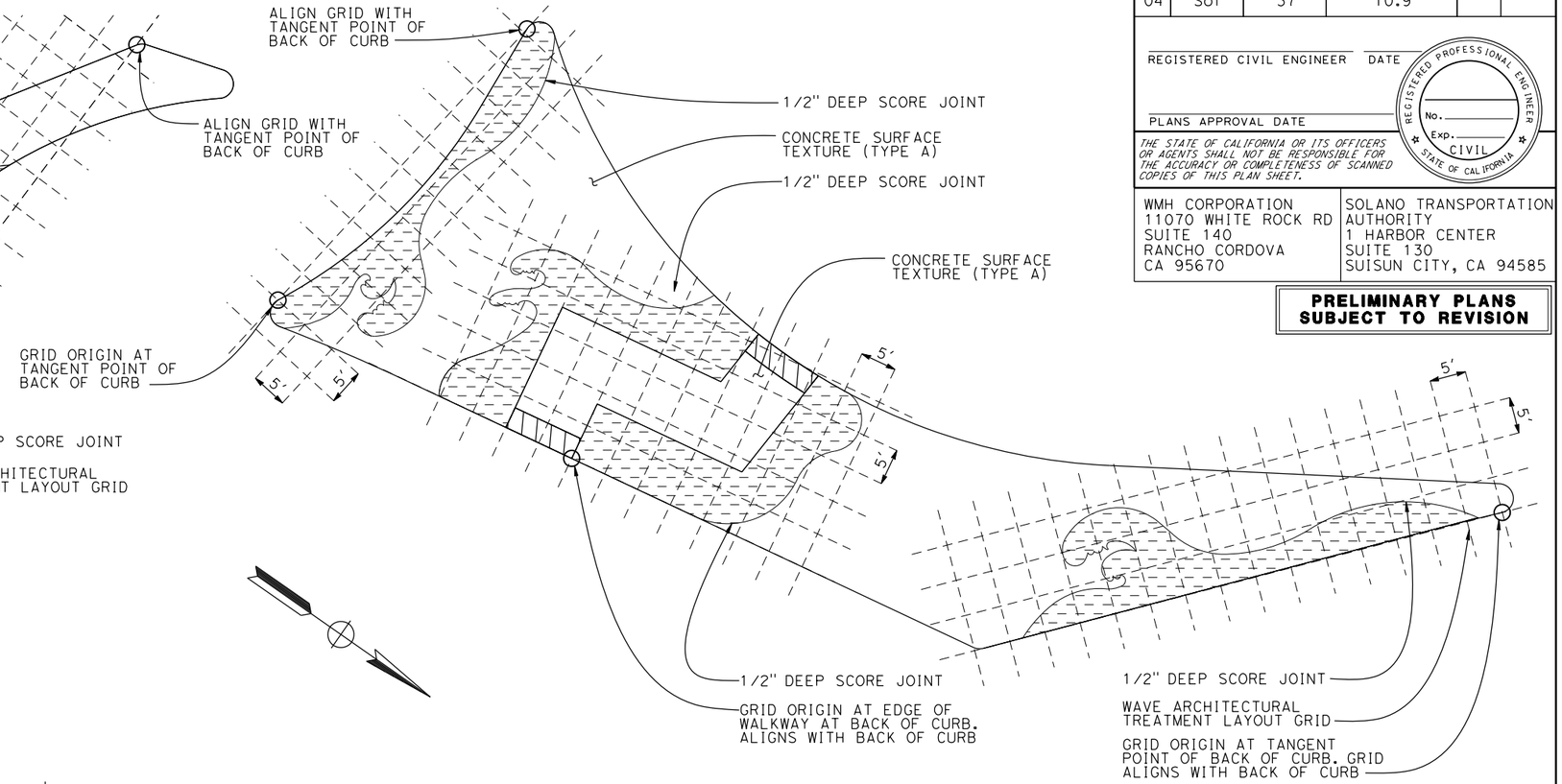

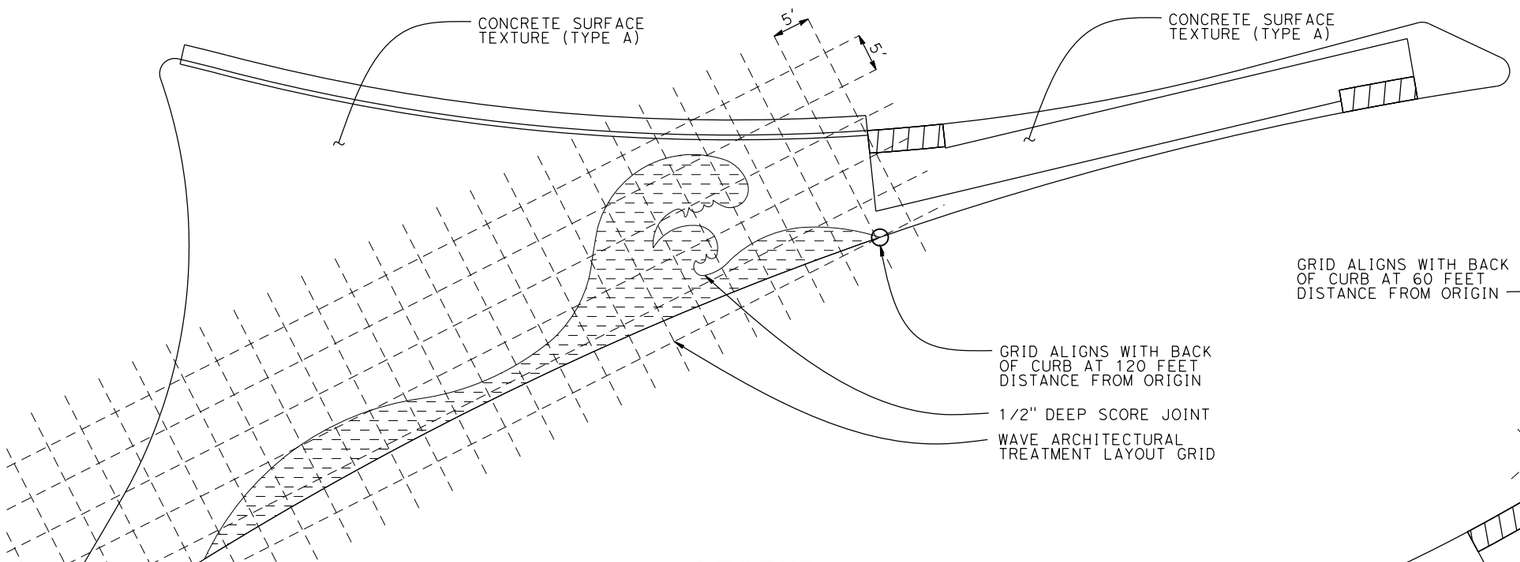

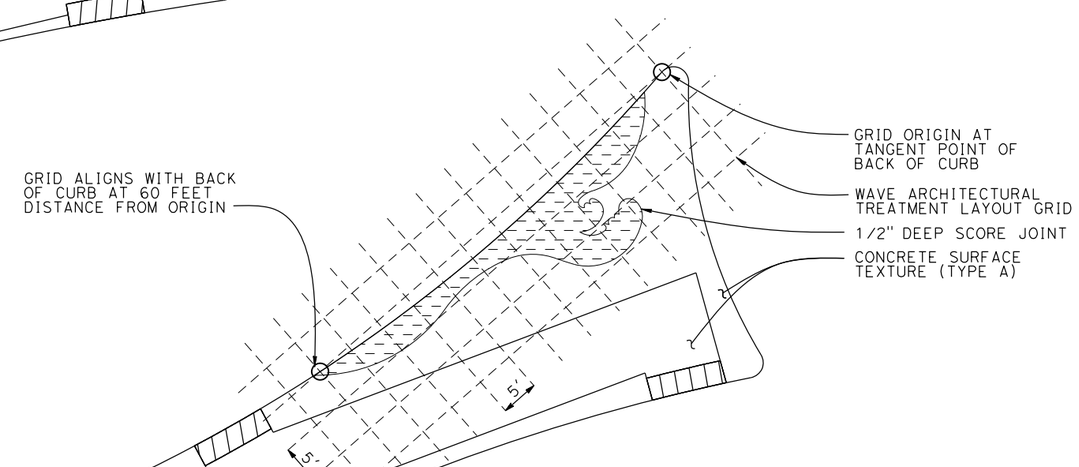

LEGEND

CONCRETE SURFACE TEXTURE (TYPE B)

FOR ABBREVIATIONS AND LEGEND, SEE SHEET C-1

CONSTRUCTION DETAILS

CURB ISLAND DETAILS

SCALE: 1' = 10'

C-32

REVISED BY	DATE REVISED
J.V.	02/15/22

JAMEY VALDIVIA — CALCULATED-DESIGNED BY
CARL GIBSON III — CHECKED BY
CARL GIBSON III — CONSULTANT FUNCTIONAL SUPERVISOR

STATE OF CALIFORNIA - DEPARTMENT OF TRANSPORTATION

X:\SR 37_FAIRGROUNDS DRIVE\000_CAD\Sheets\013-Const_Details\044A4414ga032.dgn

LAST REVISION 00-00-00 | DATE PLOTTED => 9/2/2022 TIME PLOTTED => 3:45:28 PM

Dist	COUNTY	ROUTE	POST MILES TOTAL PROJECT	SHEET No.	TOTAL SHEETS
04	Sol	37	10.9		

REGISTERED CIVIL ENGINEER DATE

PLANS APPROVAL DATE

REGISTERED PROFESSIONAL ENGINEER No. Exp. CIVIL STATE OF CALIFORNIA

THE STATE OF CALIFORNIA OR ITS OFFICERS OR AGENTS SHALL NOT BE RESPONSIBLE FOR THE ACCURACY OR COMPLETENESS OF SCANNED COPIES OF THIS PLAN SHEET.

WMH CORPORATION
11070 WHITE ROCK RD
SUITE 140
RANCHO CORDOVA
CA 95670

SOLANO TRANSPORTATION AUTHORITY
1 HARBOR CENTER
SUITE 130
SUISUN CITY, CA 94585

PRELIMINARY PLANS SUBJECT TO REVISION

NOTE:

FOR ACCURATE RIGHT OF WAY DATA, CONTACT RIGHT OF WAY ENGINEERING AT THE DISTRICT OFFICE.

LEGEND:

- TEMPORARY DRAINAGE INLET PROTECTION
- TEMPORARY DRAINAGE INLET PROTECTION (PLACED PREVIOUS STAGE)
- TEMPORARY CONCRETE WASHOUT FACILITY
- TEMPORARY PEDESTRIAN ROUTE
- WORK AREA THIS STAGE
- TEMPORARY COVER
- DIRECTION OF TRAFFIC
- xx——xx——TSF· TEMPORARY SILT FENCE

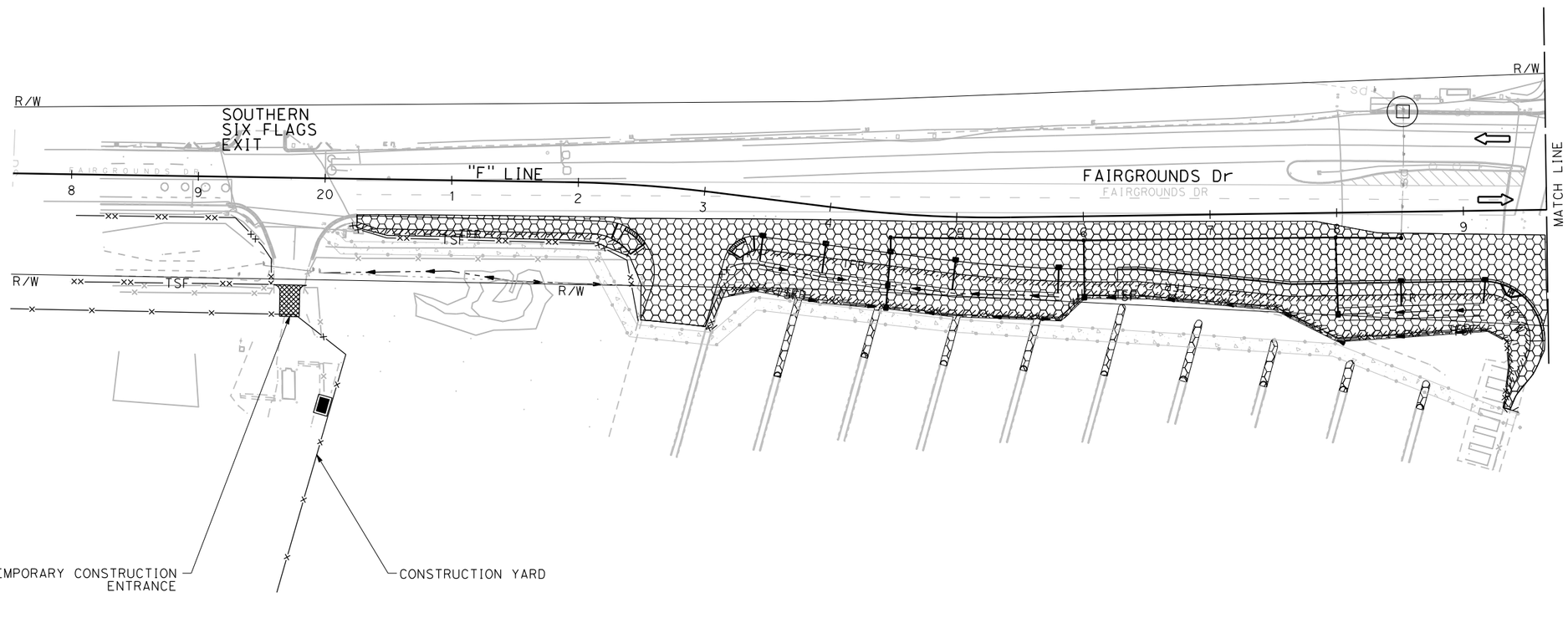

TEMPORARY WATER POLLUTION CONTROL PLAN

STAGE 1
SCALE: 1" = 50'

WPC-1

APPROVED FOR TEMPORARY WATER POLLUTION CONTROL WORK ONLY

REVISED BY	DATE REVISED
R.L.	02/15/22

RALEIGH LANGSTON — CALCULATED-DESIGNED BY
ERIN McPHERSON — CHECKED BY
CARL GIBSON III — CONSULTANT FUNCTIONAL SUPERVISOR

STATE OF CALIFORNIA - DEPARTMENT OF TRANSPORTATION
Caltrans

X:\SR 37_FAIRGROUNDS DRIVE\000_CAD\Sheets\014-Temp_WPC\GB-Plans\044A4414gb001.dgn

LAST REVISION 00-00-00 | DATE PLOTTED => 9/1/2022 | TIME PLOTTED => 4:38:25 PM

BORDER LAST REVISED 7/2/2010 | USERNAME => jvaldivia | DGN FILE => 044A4414gb001.dgn | RELATIVE BORDER SCALE IS IN INCHES 0 1 2 3 | UNIT 0738 | PROJECT NUMBER & PHASE 04000205841

Dist	COUNTY	ROUTE	POST MILES TOTAL PROJECT	SHEET No.	TOTAL SHEETS
04	Sol	37	10.9		

REGISTERED CIVIL ENGINEER DATE

PLANS APPROVAL DATE

REGISTERED PROFESSIONAL ENGINEER No. Exp. CIVIL STATE OF CALIFORNIA

THE STATE OF CALIFORNIA OR ITS OFFICERS OR AGENTS SHALL NOT BE RESPONSIBLE FOR THE ACCURACY OR COMPLETENESS OF SCANNED COPIES OF THIS PLAN SHEET.

WMH CORPORATION
11070 WHITE ROCK RD
SUITE 140
RANCHO CORDOVA
CA 95670

SOLANO TRANSPORTATION AUTHORITY
1 HARBOR CENTER
SUITE 130
SUISUN CITY, CA 94585

PRELIMINARY PLANS SUBJECT TO REVISION

NOTE:

FOR ACCURATE RIGHT OF WAY DATA, CONTACT RIGHT OF WAY ENGINEERING AT THE DISTRICT OFFICE.

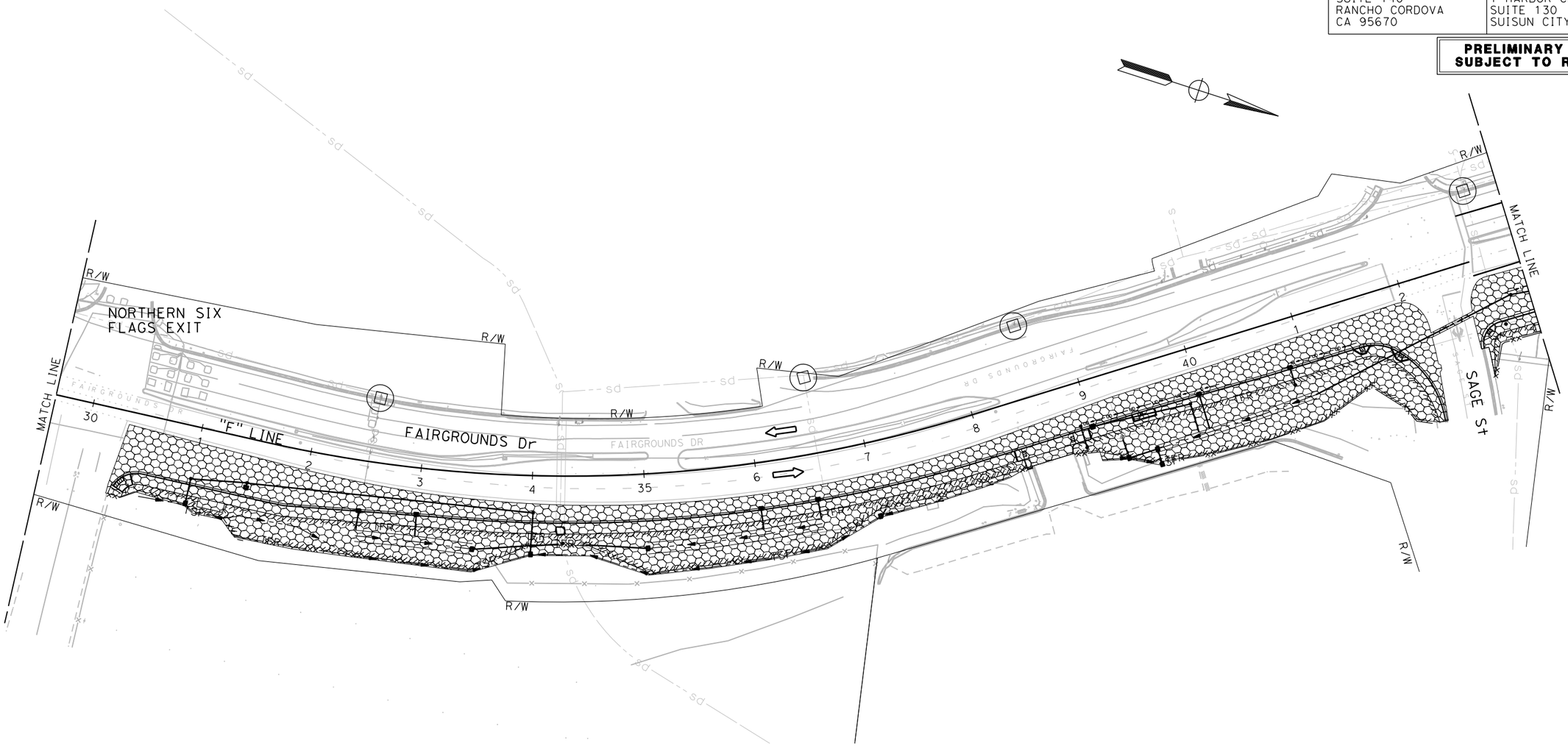

FOR LEGEND, SEE SHEET WPC-1

APPROVED FOR TEMPORARY WATER POLLUTION CONTROL WORK ONLY

TEMPORARY WATER POLLUTION CONTROL PLAN

STAGE 1

SCALE: 1" = 50'

WPC-2

CALCULATED-DESIGNED BY	RALEIGH LANGSTON
CHECKED BY	ERIN McPHERSON
REVISED BY	R.L.
DATE REVISED	02/15/22
CONSULTANT FUNCTIONAL SUPERVISOR	CARL GIBSON III

STATE OF CALIFORNIA - DEPARTMENT OF TRANSPORTATION

Caltrans

X:\SR 37_FAIRGROUNDS DRIVE\000_CAD\Sheets\014-Temp_WPC\GB-Plans\044A4414gb002.dgn

LAST REVISION 00-00-00 | DATE PLOTTED => 9/1/2022 | TIME PLOTTED => 4:38:37 PM

BORDER LAST REVISED 7/2/2010 | USERNAME => jvaldivia | DGN FILE => 044A4414gb002.dgn | RELATIVE BORDER SCALE IS IN INCHES 0 1 2 3 | UNIT 0738 | PROJECT NUMBER & PHASE 04000205841

Dist	COUNTY	ROUTE	POST MILES TOTAL PROJECT	SHEET No.	TOTAL SHEETS
04	Sol	37	10.9		

REGISTERED CIVIL ENGINEER DATE

PLANS APPROVAL DATE

REGISTERED PROFESSIONAL ENGINEER No. Exp. CIVIL STATE OF CALIFORNIA

THE STATE OF CALIFORNIA OR ITS OFFICERS OR AGENTS SHALL NOT BE RESPONSIBLE FOR THE ACCURACY OR COMPLETENESS OF SCANNED COPIES OF THIS PLAN SHEET.

WMH CORPORATION
11070 WHITE ROCK RD
SUITE 140
RANCHO CORDOVA
CA 95670

SOLANO TRANSPORTATION AUTHORITY
1 HARBOR CENTER
SUITE 130
SUISUN CITY, CA 94585

PRELIMINARY PLANS SUBJECT TO REVISION

NOTE:

FOR ACCURATE RIGHT OF WAY DATA, CONTACT RIGHT OF WAY ENGINEERING AT THE DISTRICT OFFICE.

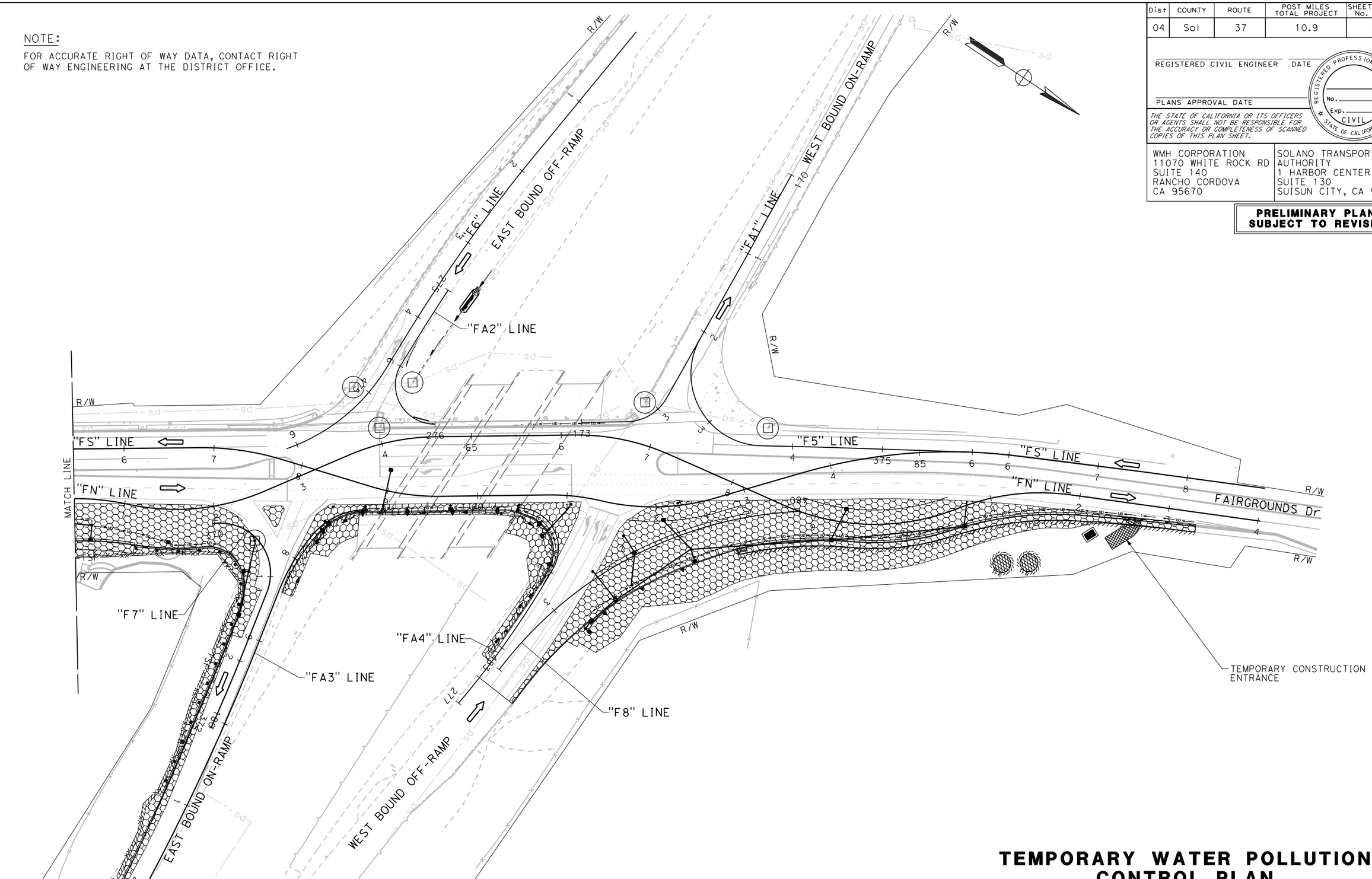

FOR NOTES, SEE SHEET WPC-1

APPROVED FOR TEMPORARY WATER POLLUTION CONTROL WORK ONLY

TEMPORARY WATER POLLUTION CONTROL PLAN

STAGE 1

SCALE: 1" = 50'

WPC-3

REVISED BY	DATE REVISED
R.L.	02/15/22

RALEIGH LANGSTON — ERIN McPHERSON — CALCULATED-DESIGNED BY — CHECKED BY

CARL GIBSON III — CONSULTANT FUNCTIONAL SUPERVISOR

STATE OF CALIFORNIA - DEPARTMENT OF TRANSPORTATION — Caltrans

X:\SR 37_FAIRGROUNDS DRIVE\000_CAD\Sheets\014-Temp_WPC\GB-Plans\044A4414gb003.dgn

LAST REVISION 00-00-00 — DATE PLOTTED => 9/1/2022 — TIME PLOTTED => 4:38:44 PM

BORDER LAST REVISED 7/2/2010 | USERNAME => jvaldivia | DGN FILE => 044A4414gb003.dgn | RELATIVE BORDER SCALE IS IN INCHES 0 1 2 3 | UNIT 0738 | PROJECT NUMBER & PHASE 04000205841

Dist	COUNTY	ROUTE	POST MILES TOTAL PROJECT	SHEET No.	TOTAL SHEETS
04	Sol	37	10.9		

REGISTERED CIVIL ENGINEER DATE

PLANS APPROVAL DATE

REGISTERED PROFESSIONAL ENGINEER No. Exp. CIVIL STATE OF CALIFORNIA

THE STATE OF CALIFORNIA OR ITS OFFICERS OR AGENTS SHALL NOT BE RESPONSIBLE FOR THE ACCURACY OR COMPLETENESS OF SCANNED COPIES OF THIS PLAN SHEET.

WMH CORPORATION
11070 WHITE ROCK RD
SUITE 140
RANCHO CORDOVA
CA 95670

SOLANO TRANSPORTATION AUTHORITY
1 HARBOR CENTER
SUITE 130
SUISUN CITY, CA 94585

PRELIMINARY PLANS SUBJECT TO REVISION

NOTE:

FOR ACCURATE RIGHT OF WAY DATA, CONTACT RIGHT OF WAY ENGINEERING AT THE DISTRICT OFFICE.

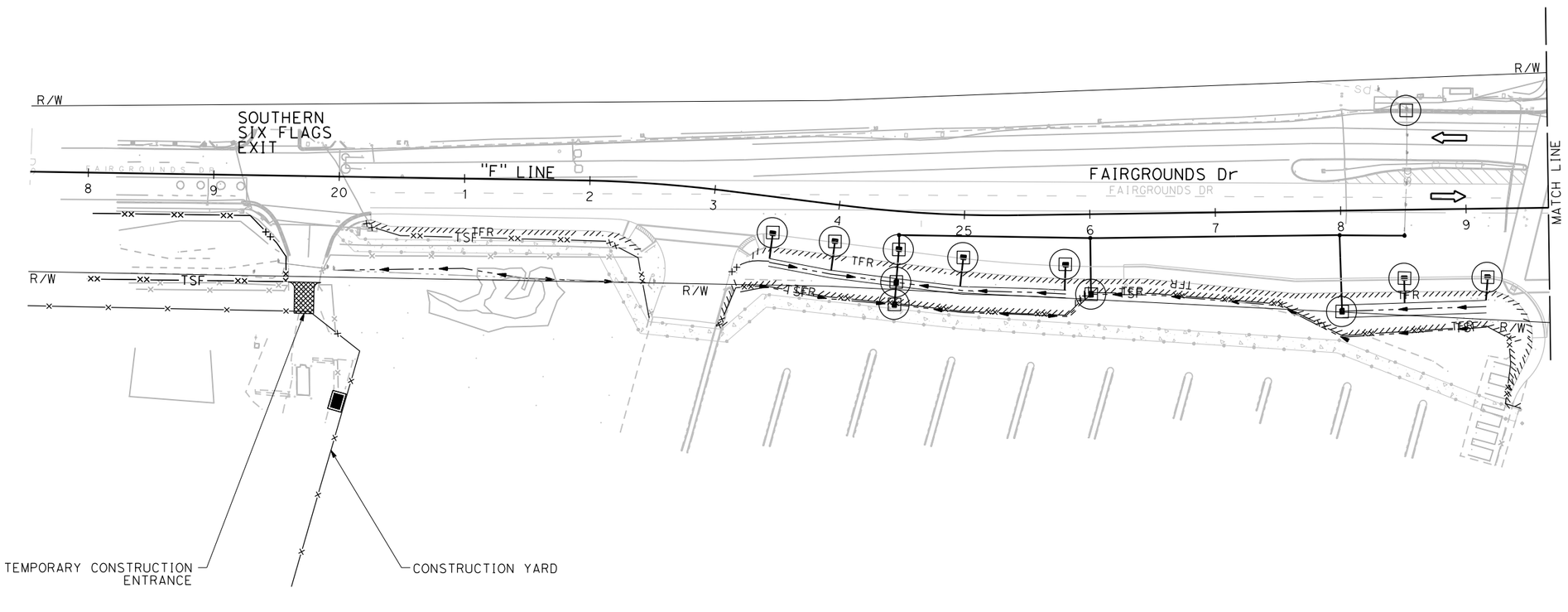

FOR LEGEND, SEE SHEET WPC-1

APPROVED FOR TEMPORARY WATER POLLUTION CONTROL WORK ONLY

TEMPORARY WATER POLLUTION CONTROL PLAN

STAGE 2

SCALE: 1" = 50'

WPC-4

REVISED BY	DATE REVISED
R.L.	02/15/22

RALEIGH LANGSTON — CALCULATED-DESIGNED BY

ERIN McPHERSON — CHECKED BY

CARL GIBSON III — CONSULTANT FUNCTIONAL SUPERVISOR

STATE OF CALIFORNIA - DEPARTMENT OF TRANSPORTATION

Caltrans

X:\SR 37_FAIRGROUNDS DRIVE\000_CAD\Sheets\014-Temp_WPC\GB-Plans\044A4414gb004.dgn

LAST REVISION 00-00-00 | DATE PLOTTED => 9/1/2022 | TIME PLOTTED => 4:39:01 PM

BORDER LAST REVISED 7/2/2010 | USERNAME => jvaldivia | DGN FILE => 044A4414gb004.dgn | RELATIVE BORDER SCALE IS IN INCHES 0 1 2 3 | UNIT 0738 | PROJECT NUMBER & PHASE 04000205841

Dist	COUNTY	ROUTE	POST MILES TOTAL PROJECT	SHEET No.	TOTAL SHEETS
04	Sol	37	10.9		

REGISTERED CIVIL ENGINEER DATE

PLANS APPROVAL DATE

REGISTERED PROFESSIONAL ENGINEER No. Exp. CIVIL STATE OF CALIFORNIA

THE STATE OF CALIFORNIA OR ITS OFFICERS OR AGENTS SHALL NOT BE RESPONSIBLE FOR THE ACCURACY OR COMPLETENESS OF SCANNED COPIES OF THIS PLAN SHEET.

WMH CORPORATION
11070 WHITE ROCK RD
SUITE 140
RANCHO CORDOVA
CA 95670

SOLANO TRANSPORTATION AUTHORITY
1 HARBOR CENTER
SUITE 130
SUISUN CITY, CA 94585

PRELIMINARY PLANS SUBJECT TO REVISION

NOTE:

FOR ACCURATE RIGHT OF WAY DATA, CONTACT RIGHT OF WAY ENGINEERING AT THE DISTRICT OFFICE.

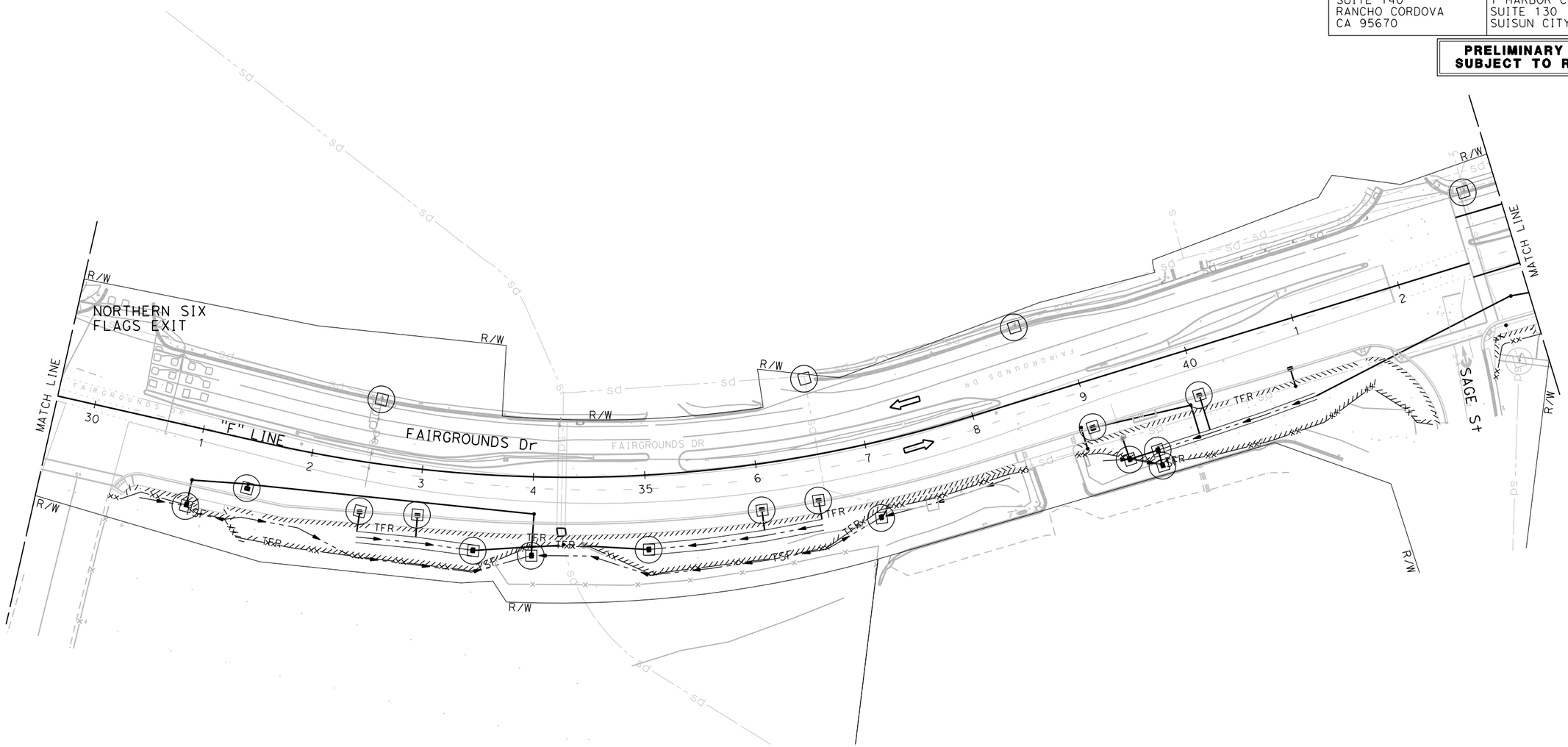

FOR LEGEND, SEE SHEET WPC-1

APPROVED FOR TEMPORARY WATER POLLUTION CONTROL WORK ONLY

TEMPORARY WATER POLLUTION CONTROL PLAN

STAGE 2

SCALE: 1" = 50'

WPC-5

REVISED BY	R.L.
DATE REVISED	02/15/22
RALEIGH LANGSTON	
ERIN McPHERSON	
CALCULATED-DESIGNED BY	
CHECKED BY	
CONSULTANT FUNCTIONAL SUPERVISOR	CARL GIBSON III

STATE OF CALIFORNIA - DEPARTMENT OF TRANSPORTATION

Caltrans

X:\SR 37_FAIRGROUNDS DRIVE\000_CAD\Sheets\014-Temp_WPC\GB-Plans\044A4414gb005.dgn

LAST REVISION 00-00-00 | DATE PLOTTED => 9/1/2022 | TIME PLOTTED => 4:39:07 PM

BORDER LAST REVISED 7/2/2010 | USERNAME => jvaldivia | DGN FILE => 044A4414gb005.dgn | RELATIVE BORDER SCALE IS IN INCHES 0 1 2 3 | UNIT 0738 | PROJECT NUMBER & PHASE 04000205841

Dist	COUNTY	ROUTE	POST MILES TOTAL PROJECT	SHEET No.	TOTAL SHEETS
04	Sol	37	10.9		

REGISTERED CIVIL ENGINEER DATE

PLANS APPROVAL DATE

REGISTERED PROFESSIONAL ENGINEER No. Exp. CIVIL STATE OF CALIFORNIA

THE STATE OF CALIFORNIA OR ITS OFFICERS OR AGENTS SHALL NOT BE RESPONSIBLE FOR THE ACCURACY OR COMPLETENESS OF SCANNED COPIES OF THIS PLAN SHEET.

WMH CORPORATION
11070 WHITE ROCK RD
SUITE 140
RANCHO CORDOVA
CA 95670

SOLANO TRANSPORTATION AUTHORITY
1 HARBOR CENTER
SUITE 130
SUISUN CITY, CA 94585

PRELIMINARY PLANS SUBJECT TO REVISION

NOTE:

FOR ACCURATE RIGHT OF WAY DATA, CONTACT RIGHT OF WAY ENGINEERING AT THE DISTRICT OFFICE.

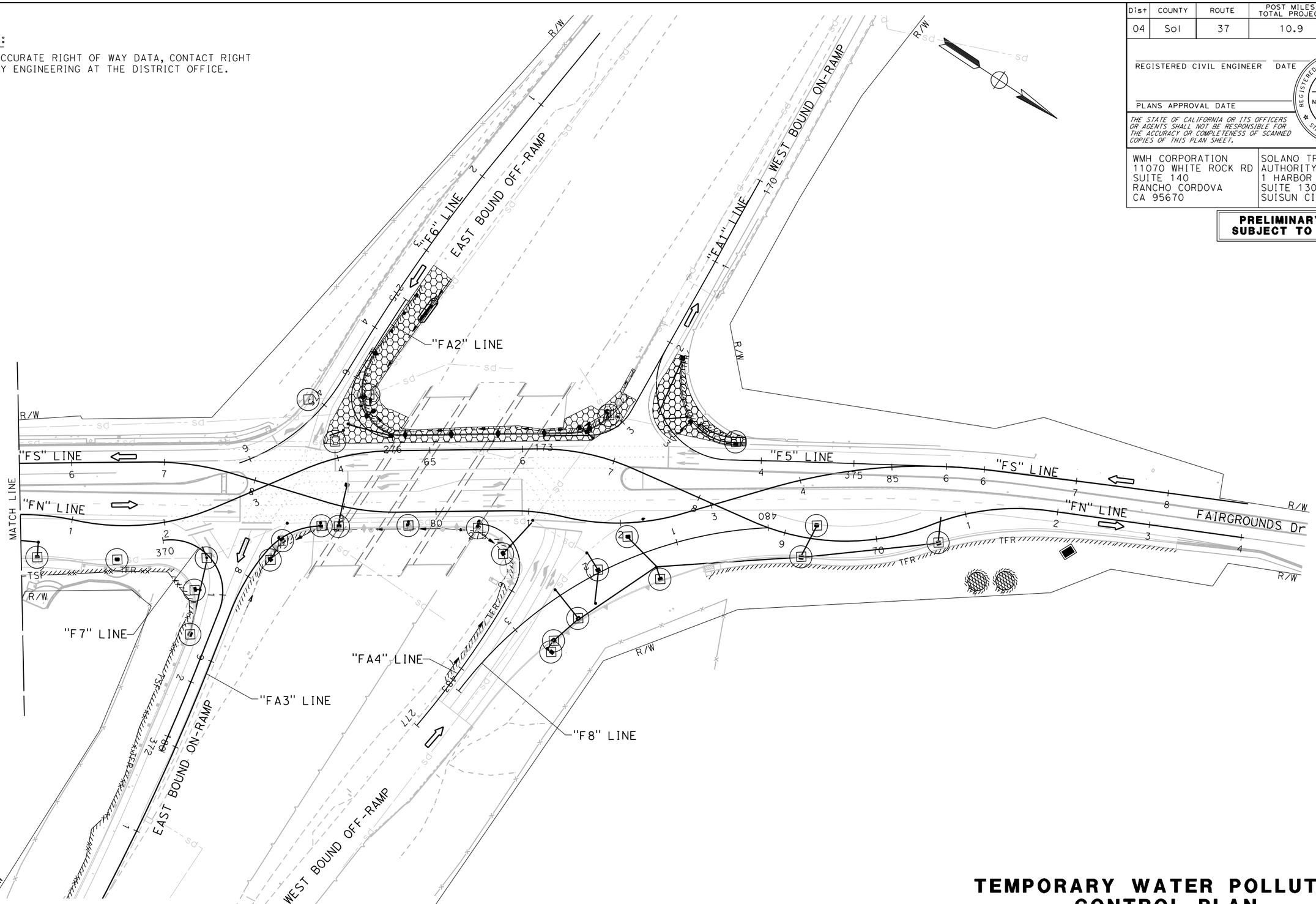

FOR LEGEND, SEE SHEET WPC-1

APPROVED FOR TEMPORARY WATER POLLUTION CONTROL WORK ONLY

TEMPORARY WATER POLLUTION CONTROL PLAN

STAGE 2

SCALE: 1" = 50'

WPC-6

R.L.	02/15/22	REVISED BY	DATE REVISED
RALEIGH LANGSTON	ERIN McPHERSON	CALCULATED-DESIGNED BY	CHECKED BY
CARL GIBSON III		CONSULTANT FUNCTIONAL SUPERVISOR	

STATE OF CALIFORNIA - DEPARTMENT OF TRANSPORTATION

Caltrans

X:\SR 37_FAIRGROUNDS DRIVE\000_CAD\Sheets\014-Temp_WPC\GB-Plans\044A4414gb006.dgn

LAST REVISION 00-00-00 | DATE PLOTTED => 9/1/2022 | TIME PLOTTED => 4:39:10 PM

Dist	COUNTY	ROUTE	POST MILES TOTAL PROJECT	SHEET No.	TOTAL SHEETS
04	Sol	37	10.9		

REGISTERED CIVIL ENGINEER DATE

PLANS APPROVAL DATE

REGISTERED PROFESSIONAL ENGINEER No. Exp. CIVIL STATE OF CALIFORNIA

THE STATE OF CALIFORNIA OR ITS OFFICERS OR AGENTS SHALL NOT BE RESPONSIBLE FOR THE ACCURACY OR COMPLETENESS OF SCANNED COPIES OF THIS PLAN SHEET.

WMH CORPORATION
11070 WHITE ROCK RD
SUITE 140
RANCHO CORDOVA
CA 95670

SOLANO TRANSPORTATION AUTHORITY
1 HARBOR CENTER
SUITE 130
SUISUN CITY, CA 94585

PRELIMINARY PLANS SUBJECT TO REVISION

NOTE:

FOR ACCURATE RIGHT OF WAY DATA, CONTACT RIGHT OF WAY ENGINEERING AT THE DISTRICT OFFICE.

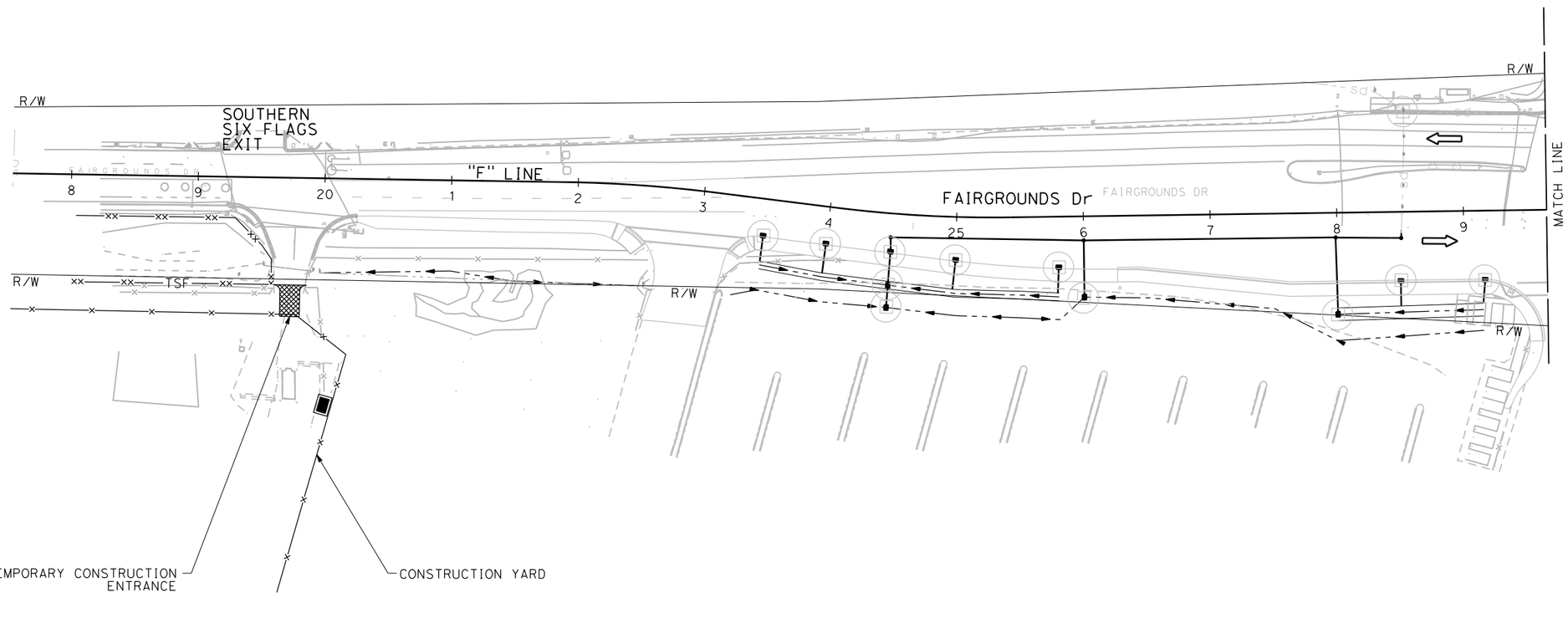

FOR LEGEND, SEE SHEET WPC-1

APPROVED FOR TEMPORARY WATER POLLUTION CONTROL WORK ONLY

TEMPORARY WATER POLLUTION CONTROL PLAN

STAGE 3A

SCALE: 1" = 50'

WPC-7

REVISED BY	DATE REVISED
R.L.	02/15/22

CALCULATED-DESIGNED BY: RALEIGH LANGSTON

CHECKED BY: ERIN McPHERSON

CONSULTANT FUNCTIONAL SUPERVISOR: CARL GIBSON III

STATE OF CALIFORNIA - DEPARTMENT OF TRANSPORTATION

Caltrans

X:\SR 37_FAIRGROUNDS DRIVE\000_CAD\Sheets\014-Temp_WPC\GB-Plans\044A4414gb007.dgn

LAST REVISION 00-00-00 | DATE PLOTTED => 9/1/2022 TIME PLOTTED => 4:39:28 PM

Dist	COUNTY	ROUTE	POST MILES TOTAL PROJECT	SHEET No.	TOTAL SHEETS
04	Sol	37	10.9		

REGISTERED CIVIL ENGINEER DATE

PLANS APPROVAL DATE

REGISTERED PROFESSIONAL ENGINEER No. Exp. CIVIL STATE OF CALIFORNIA

THE STATE OF CALIFORNIA OR ITS OFFICERS OR AGENTS SHALL NOT BE RESPONSIBLE FOR THE ACCURACY OR COMPLETENESS OF SCANNED COPIES OF THIS PLAN SHEET.

WMH CORPORATION
11070 WHITE ROCK RD
SUITE 140
RANCHO CORDOVA
CA 95670

SOLANO TRANSPORTATION AUTHORITY
1 HARBOR CENTER
SUITE 130
SUISUN CITY, CA 94585

PRELIMINARY PLANS SUBJECT TO REVISION

NOTE:

FOR ACCURATE RIGHT OF WAY DATA, CONTACT RIGHT OF WAY ENGINEERING AT THE DISTRICT OFFICE.

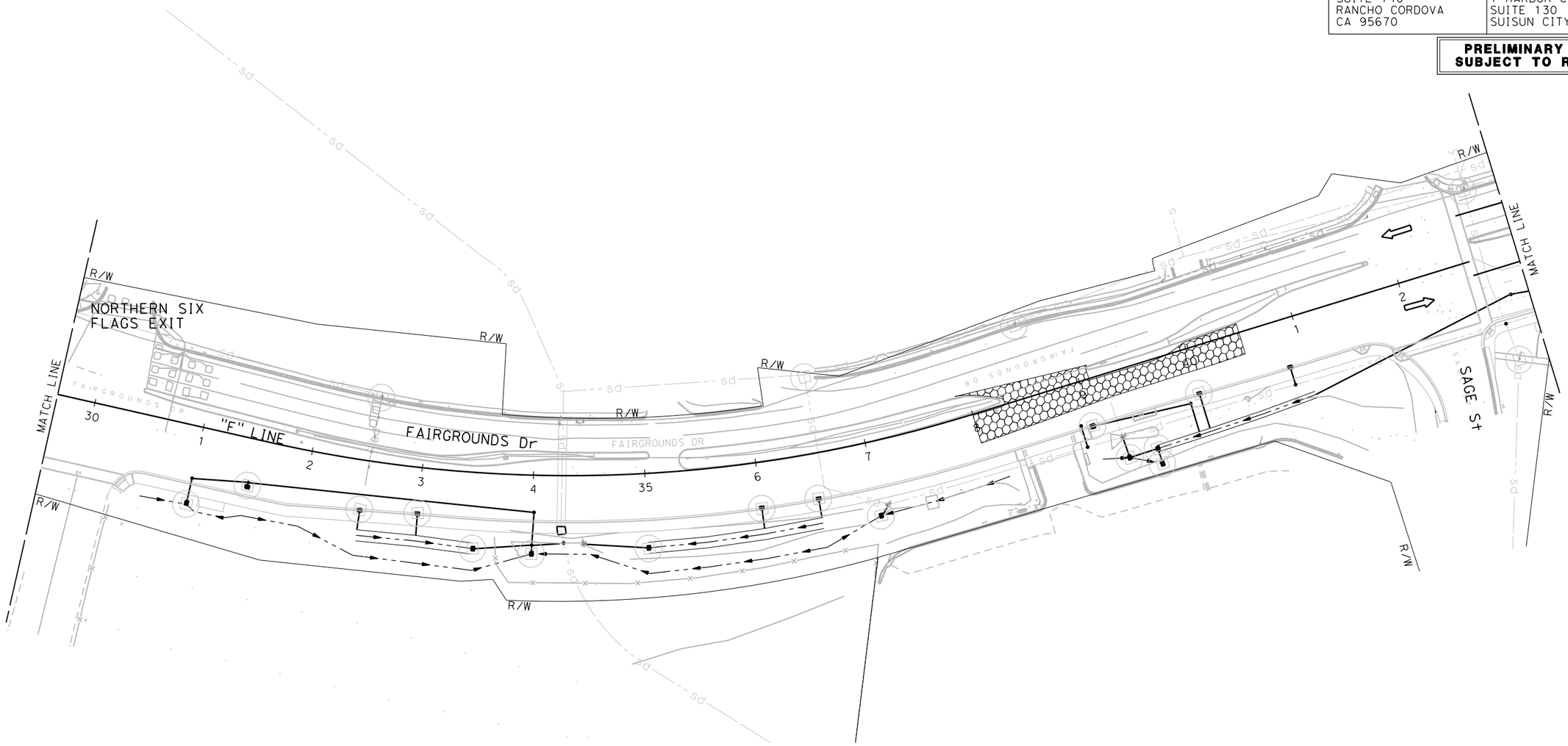

FOR LEGEND, SEE SHEET WPC-1

APPROVED FOR TEMPORARY WATER POLLUTION CONTROL WORK ONLY

TEMPORARY WATER POLLUTION CONTROL PLAN

STAGE 3A
SCALE: 1" = 50'

WPC-8

REVISED BY	R.L.
DATE REVISED	02/15/22
RALEIGH LANGSTON	
ERIN McPHERSON	
CALCULATED-DESIGNED BY	
CHECKED BY	
CONSULTANT FUNCTIONAL SUPERVISOR	CARL GIBSON III

STATE OF CALIFORNIA - DEPARTMENT OF TRANSPORTATION

Caltrans

X:\SR 37_FAIRGROUNDS DRIVE\000_CAD\Sheets\014-Temp_WPC\GB-Plans\044A4414gb008.dgn

LAST REVISION 00-00-00 | DATE PLOTTED => 9/1/2022 TIME PLOTTED => 4:39:33 PM

BORDER LAST REVISED 7/2/2010 | USERNAME => jvaldivia DGN FILE => 044A4414gb008.dgn | RELATIVE BORDER SCALE IS IN INCHES 0 1 2 3 | UNIT 0738 | PROJECT NUMBER & PHASE 04000205841

Dist	COUNTY	ROUTE	POST MILES TOTAL PROJECT	SHEET No.	TOTAL SHEETS
04	Sol	37	10.9		

REGISTERED CIVIL ENGINEER DATE

PLANS APPROVAL DATE

REGISTERED PROFESSIONAL ENGINEER No. Exp. CIVIL STATE OF CALIFORNIA

THE STATE OF CALIFORNIA OR ITS OFFICERS OR AGENTS SHALL NOT BE RESPONSIBLE FOR THE ACCURACY OR COMPLETENESS OF SCANNED COPIES OF THIS PLAN SHEET.

WMH CORPORATION
11070 WHITE ROCK RD
SUITE 140
RANCHO CORDOVA
CA 95670

SOLANO TRANSPORTATION AUTHORITY
1 HARBOR CENTER
SUITE 130
SUISUN CITY, CA 94585

PRELIMINARY PLANS SUBJECT TO REVISION

NOTE:

FOR ACCURATE RIGHT OF WAY DATA, CONTACT RIGHT OF WAY ENGINEERING AT THE DISTRICT OFFICE.

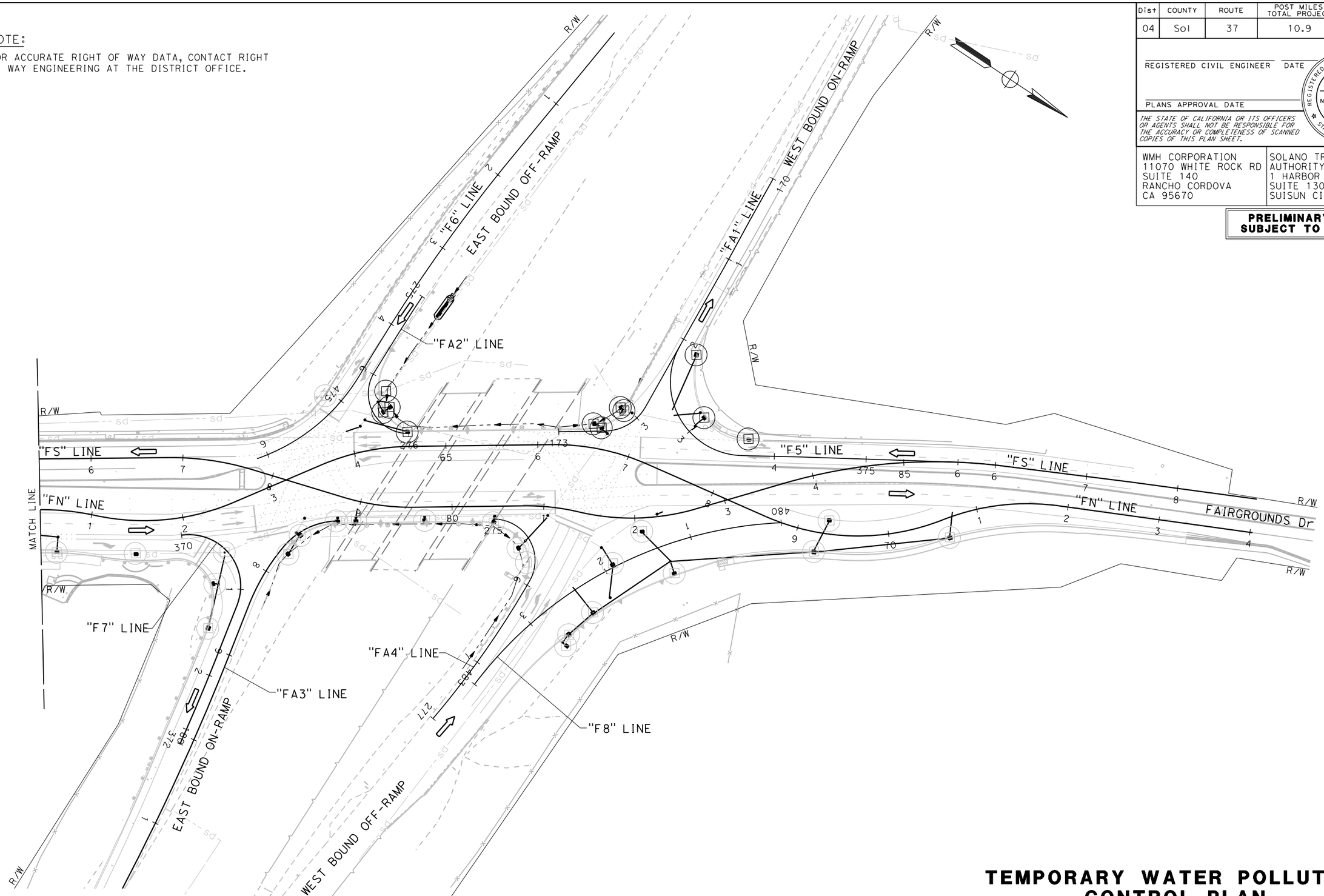

FOR LEGEND, SEE SHEET WPC-1

APPROVED FOR TEMPORARY WATER POLLUTION CONTROL WORK ONLY

TEMPORARY WATER POLLUTION CONTROL PLAN

STAGE 3A

SCALE: 1" = 50'

WPC-9

R.L.	02/15/22		
REVISED BY	DATE REVISED		
RALEIGH LANGSTON	ERIN McPHERSON		
CALCULATED-DESIGNED BY	CHECKED BY		
CARL GIBSON III			
CONSULTANT FUNCTIONAL SUPERVISOR			

STATE OF CALIFORNIA - DEPARTMENT OF TRANSPORTATION

Caltrans

X:\SR 37_FAIRGROUNDS DRIVE\000_CAD\Sheets\014-Temp_WPC\GB-Plans\044A4414gb009.dgn

LAST REVISION 00-00-00 | DATE PLOTTED => 9/1/2022 | TIME PLOTTED => 4:39:36 PM

Dist	COUNTY	ROUTE	POST MILES TOTAL PROJECT	SHEET No.	TOTAL SHEETS
04	Sol	37	10.9		

REGISTERED CIVIL ENGINEER DATE

PLANS APPROVAL DATE

REGISTERED PROFESSIONAL ENGINEER No. Exp. CIVIL STATE OF CALIFORNIA

THE STATE OF CALIFORNIA OR ITS OFFICERS OR AGENTS SHALL NOT BE RESPONSIBLE FOR THE ACCURACY OR COMPLETENESS OF SCANNED COPIES OF THIS PLAN SHEET.

WMH CORPORATION
11070 WHITE ROCK RD
SUITE 140
RANCHO CORDOVA
CA 95670

SOLANO TRANSPORTATION AUTHORITY
1 HARBOR CENTER
SUITE 130
SUISUN CITY, CA 94585

PRELIMINARY PLANS SUBJECT TO REVISION

NOTE:

FOR ACCURATE RIGHT OF WAY DATA, CONTACT RIGHT OF WAY ENGINEERING AT THE DISTRICT OFFICE.

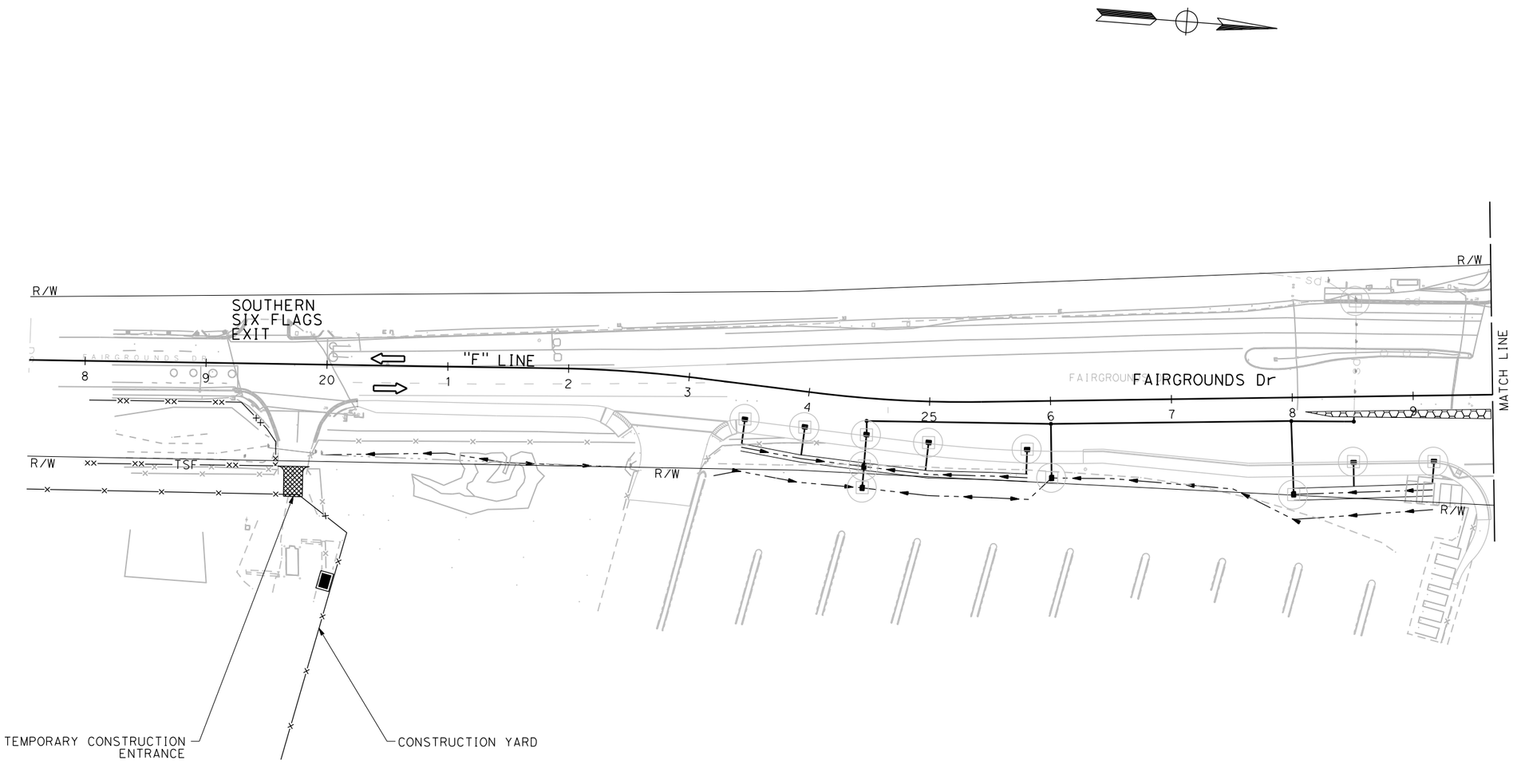

FOR LEGEND, SEE SHEET WPC-1

APPROVED FOR TEMPORARY WATER POLLUTION CONTROL WORK ONLY

TEMPORARY WATER POLLUTION CONTROL PLAN

STAGE 3B

SCALE: 1" = 50'

WPC-10

CALCULATED-DESIGNED BY	RALEIGH LANGSTON
CHECKED BY	ERIN McPHERSON
REVISED BY	R.L.
DATE REVISED	02/15/22
CONSULTANT FUNCTIONAL SUPERVISOR	CARL GIBSON III

STATE OF CALIFORNIA - DEPARTMENT OF TRANSPORTATION

Caltrans

X:\SR 37_FAIRGROUNDS DRIVE\000_CAD\Sheets\014-Temp_WPC\GB-Plans\044A4414gb010.dgn

LAST REVISION 00-00-00 | DATE PLOTTED => 9/1/2022 TIME PLOTTED => 4:39:55 PM

Dist	COUNTY	ROUTE	POST MILES TOTAL PROJECT	SHEET No.	TOTAL SHEETS
04	Sol	37	10.9		

REGISTERED CIVIL ENGINEER DATE

PLANS APPROVAL DATE

REGISTERED PROFESSIONAL ENGINEER No. Exp. CIVIL STATE OF CALIFORNIA

THE STATE OF CALIFORNIA OR ITS OFFICERS OR AGENTS SHALL NOT BE RESPONSIBLE FOR THE ACCURACY OR COMPLETENESS OF SCANNED COPIES OF THIS PLAN SHEET.

WMH CORPORATION
11070 WHITE ROCK RD
SUITE 140
RANCHO CORDOVA
CA 95670

SOLANO TRANSPORTATION AUTHORITY
1 HARBOR CENTER
SUITE 130
SUISUN CITY, CA 94585

PRELIMINARY PLANS SUBJECT TO REVISION

NOTE:

FOR ACCURATE RIGHT OF WAY DATA, CONTACT RIGHT OF WAY ENGINEERING AT THE DISTRICT OFFICE.

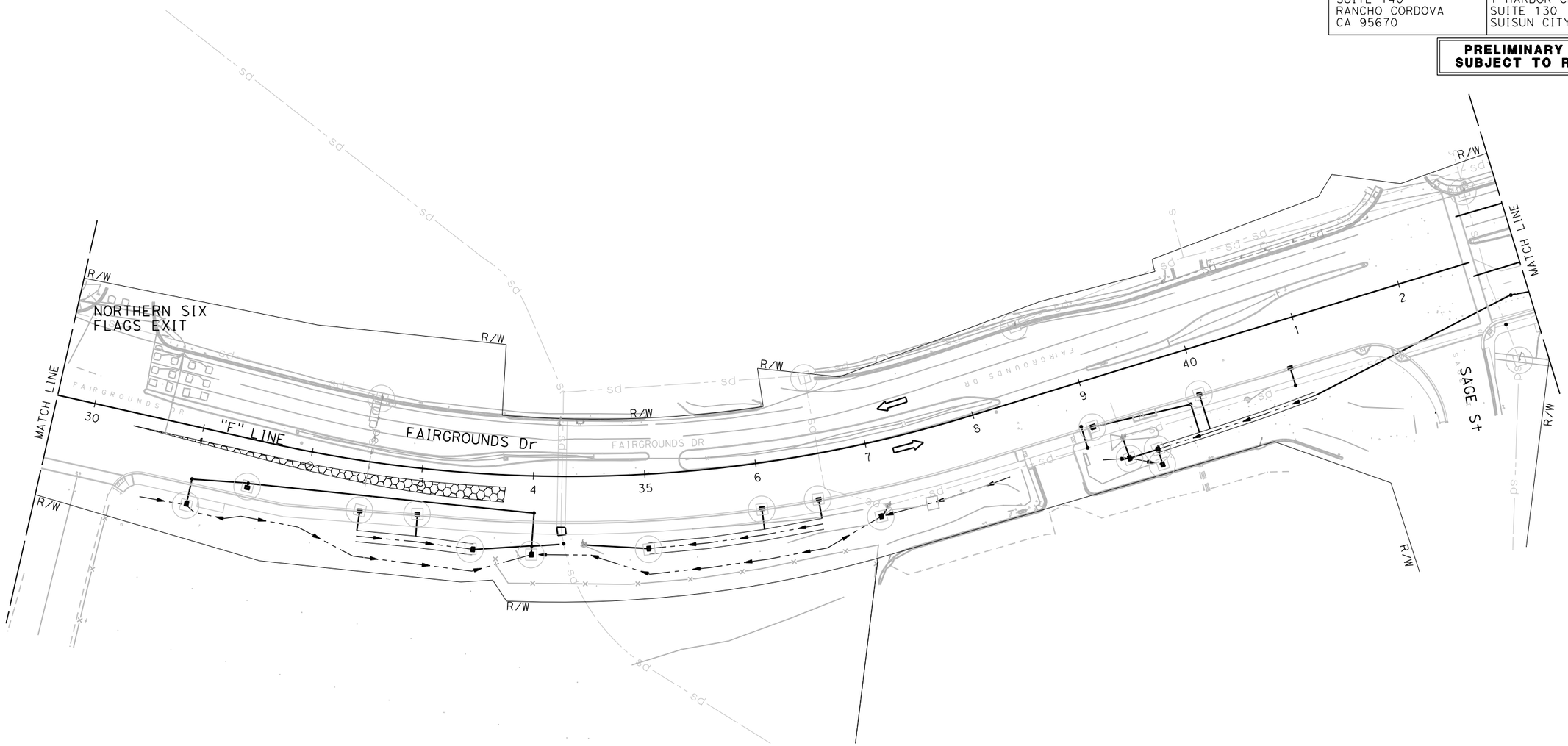

FOR LEGEND, SEE SHEET WPC-1

APPROVED FOR TEMPORARY WATER POLLUTION CONTROL WORK ONLY

TEMPORARY WATER POLLUTION CONTROL PLAN

STAGE 3B

SCALE: 1" = 50'

WPC-11

R.L.	02/15/22
REVISED BY	DATE REVISED
RALEIGH LANGSTON	
ERIN McPHERSON	
CALCULATED-DESIGNED BY	
CHECKED BY	
CONSULTANT FUNCTIONAL SUPERVISOR	
CARL GIBSON III	

STATE OF CALIFORNIA - DEPARTMENT OF TRANSPORTATION

Caltrans

X:\SR 37_FAIRGROUNDS DRIVE\000_CAD\Sheets\014-Temp_WPC\GB-Plans\044A4414gb011.dgn

LAST REVISION 00-00-00 | DATE PLOTTED => 9/1/2022 | TIME PLOTTED => 4:40:00 PM

BORDER LAST REVISED 7/2/2010 | USERNAME => jvaldivia | DGN FILE => 044A4414gb011.dgn | RELATIVE BORDER SCALE IS IN INCHES 0 1 2 3 | UNIT 0738 | PROJECT NUMBER & PHASE 04000205841

Dist	COUNTY	ROUTE	POST MILES TOTAL PROJECT	SHEET No.	TOTAL SHEETS
04	Sol	37	10.9		

REGISTERED CIVIL ENGINEER DATE

PLANS APPROVAL DATE

REGISTERED PROFESSIONAL ENGINEER No. Exp. CIVIL STATE OF CALIFORNIA

THE STATE OF CALIFORNIA OR ITS OFFICERS OR AGENTS SHALL NOT BE RESPONSIBLE FOR THE ACCURACY OR COMPLETENESS OF SCANNED COPIES OF THIS PLAN SHEET.

WMH CORPORATION
11070 WHITE ROCK RD
SUITE 140
RANCHO CORDOVA
CA 95670

SOLANO TRANSPORTATION AUTHORITY
1 HARBOR CENTER
SUITE 130
SUISUN CITY, CA 94585

PRELIMINARY PLANS SUBJECT TO REVISION

NOTE:

FOR ACCURATE RIGHT OF WAY DATA, CONTACT RIGHT OF WAY ENGINEERING AT THE DISTRICT OFFICE.

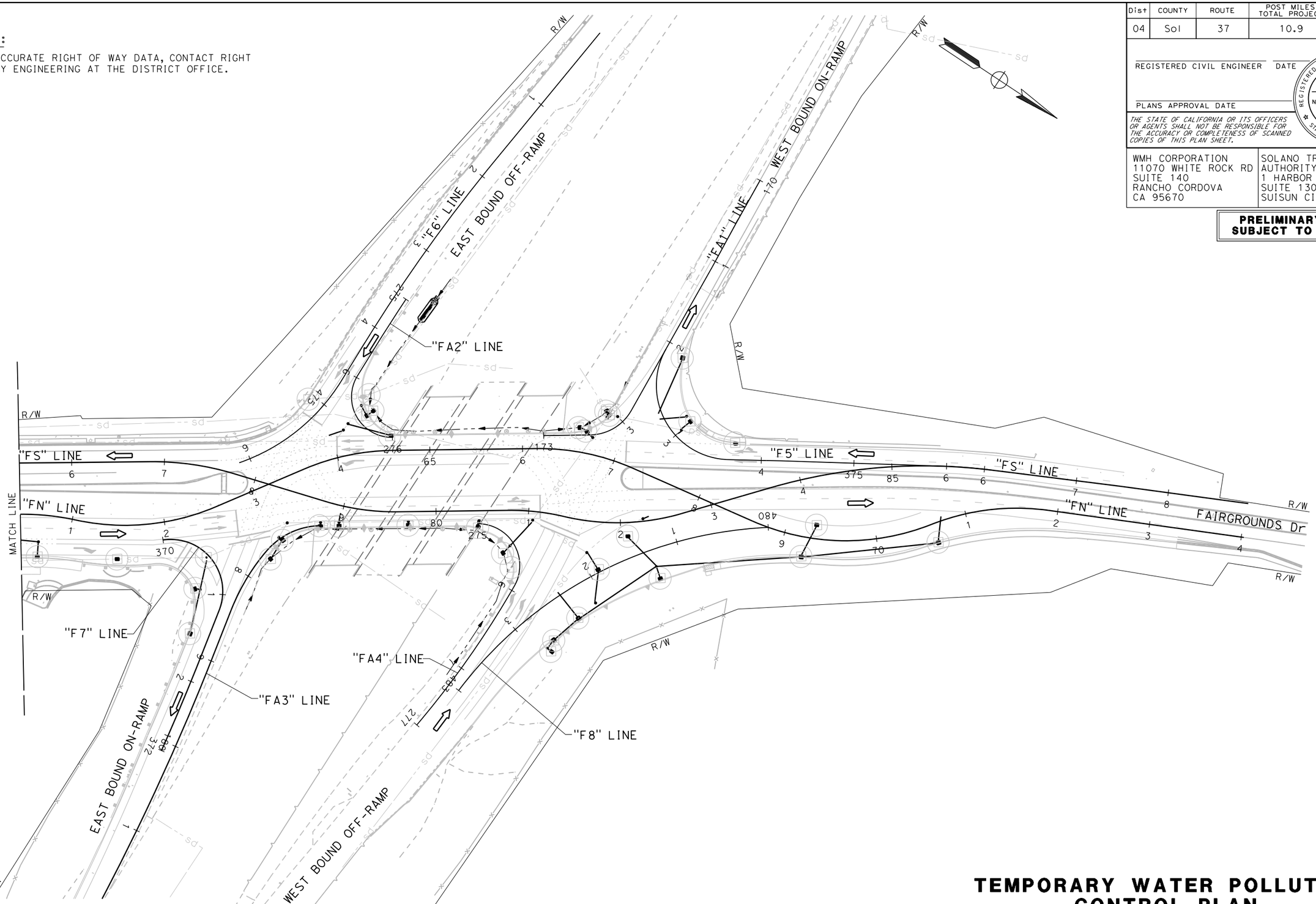

FOR LEGEND, SEE SHEET WPC-1

APPROVED FOR TEMPORARY WATER POLLUTION CONTROL WORK ONLY

TEMPORARY WATER POLLUTION CONTROL PLAN

STAGE 3B

SCALE: 1" = 50'

WPC-12

R.L.	02/15/22
REVISED BY	DATE REVISED
RALEIGH LANGSTON	ERIN McPHERSON
CALCULATED-DESIGNED BY	CHECKED BY
CARL GIBSON III	
CONSULTANT FUNCTIONAL SUPERVISOR	

STATE OF CALIFORNIA - DEPARTMENT OF TRANSPORTATION

Caltrans

X:\SR 37_FAIRGROUNDS DRIVE\000_CAD\Sheets\014-Temp_WPC\GB-Plans\044A4414gb012.dgn

LAST REVISION 00-00-00 | DATE PLOTTED => 9/1/2022 | TIME PLOTTED => 4:40:03 PM

BORDER LAST REVISED 7/2/2010 | USERNAME => jvaldivia | DGN FILE => 044A4414gb012.dgn | RELATIVE BORDER SCALE IS IN INCHES 0 1 2 3 | UNIT 0738 | PROJECT NUMBER & PHASE 04000205841

Dist	COUNTY	ROUTE	POST MILES TOTAL PROJECT	SHEET No.	TOTAL SHEETS
04	Sol	37	10.9		

REGISTERED CIVIL ENGINEER DATE

PLANS APPROVAL DATE

REGISTERED PROFESSIONAL ENGINEER No. Exp. CIVIL STATE OF CALIFORNIA

THE STATE OF CALIFORNIA OR ITS OFFICERS OR AGENTS SHALL NOT BE RESPONSIBLE FOR THE ACCURACY OR COMPLETENESS OF SCANNED COPIES OF THIS PLAN SHEET.

WMH CORPORATION
11070 WHITE ROCK RD
SUITE 140
RANCHO CORDOVA
CA 95670

SOLANO TRANSPORTATION AUTHORITY
1 HARBOR CENTER
SUITE 130
SUISUN CITY, CA 94585

PRELIMINARY PLANS SUBJECT TO REVISION

NOTE:

FOR ACCURATE RIGHT OF WAY DATA, CONTACT RIGHT OF WAY ENGINEERING AT THE DISTRICT OFFICE.

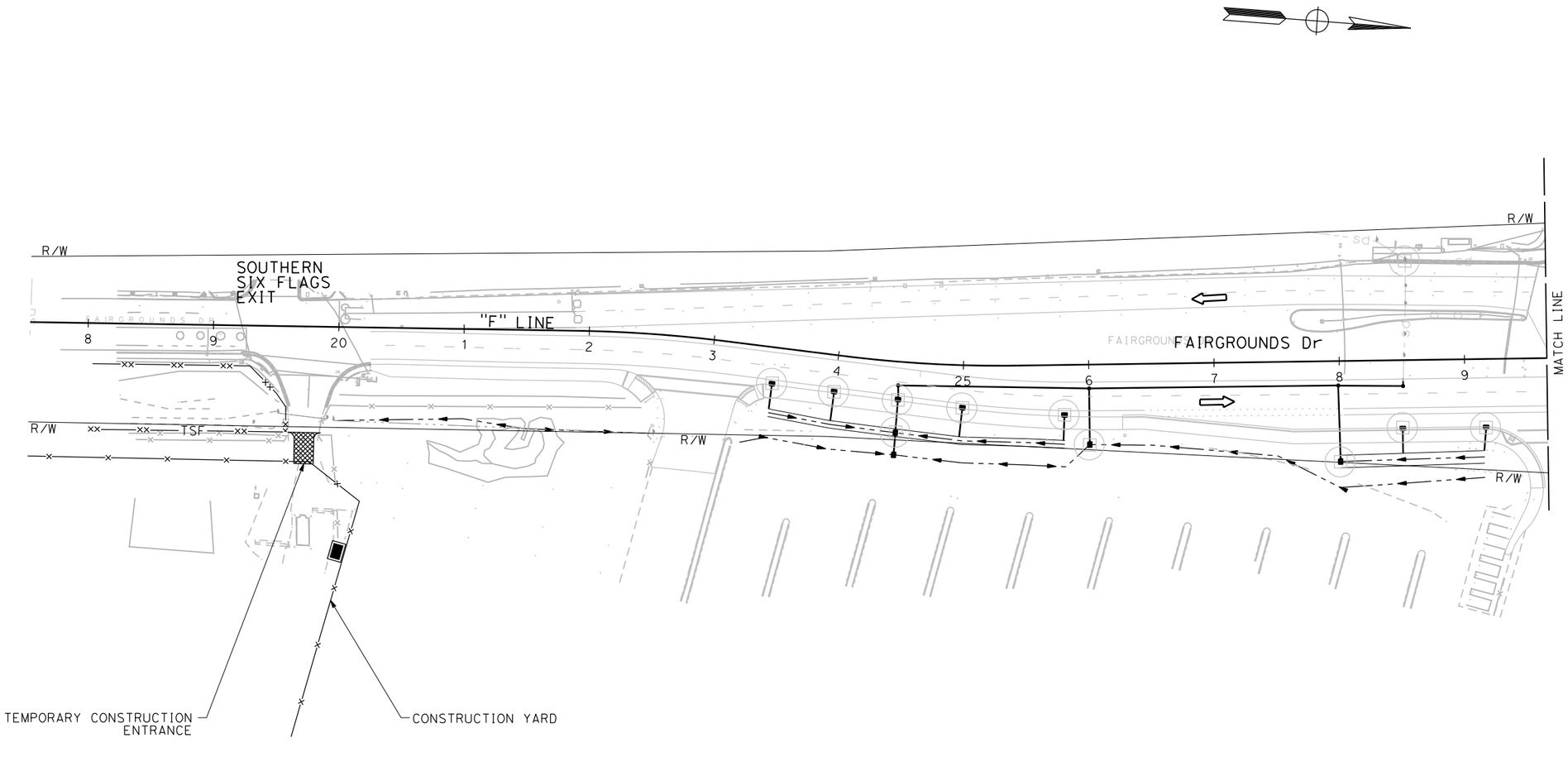

FOR LEGEND, SEE SHEET WPC-1

APPROVED FOR TEMPORARY WATER POLLUTION CONTROL WORK ONLY

TEMPORARY WATER POLLUTION CONTROL PLAN

STAGE 3C

SCALE: 1" = 50'

WPC-13

CALCULATED-DESIGNED BY	RALEIGH LANGSTON
CHECKED BY	ERIN McPHERSON
REVISED BY	R.L.
DATE REVISED	02/15/22
CONSULTANT FUNCTIONAL SUPERVISOR	CARL GIBSON III

STATE OF CALIFORNIA - DEPARTMENT OF TRANSPORTATION

Caltrans

X:\SR 37_FAIRGROUNDS DRIVE\000_CAD\Sheets\014-Temp_WPC\GB-Plans\044A4414gb013.dgn

LAST REVISION 00-00-00 | DATE PLOTTED => 9/1/2022 TIME PLOTTED => 4:40:22 PM

Dist	COUNTY	ROUTE	POST MILES TOTAL PROJECT	SHEET No.	TOTAL SHEETS
04	Sol	37	10.9		

REGISTERED CIVIL ENGINEER DATE

PLANS APPROVAL DATE

REGISTERED PROFESSIONAL ENGINEER No. Exp. CIVIL STATE OF CALIFORNIA

THE STATE OF CALIFORNIA OR ITS OFFICERS OR AGENTS SHALL NOT BE RESPONSIBLE FOR THE ACCURACY OR COMPLETENESS OF SCANNED COPIES OF THIS PLAN SHEET.

WMH CORPORATION
11070 WHITE ROCK RD
SUITE 140
RANCHO CORDOVA
CA 95670

SOLANO TRANSPORTATION AUTHORITY
1 HARBOR CENTER
SUITE 130
SUISUN CITY, CA 94585

PRELIMINARY PLANS SUBJECT TO REVISION

NOTE:

FOR ACCURATE RIGHT OF WAY DATA, CONTACT RIGHT OF WAY ENGINEERING AT THE DISTRICT OFFICE.

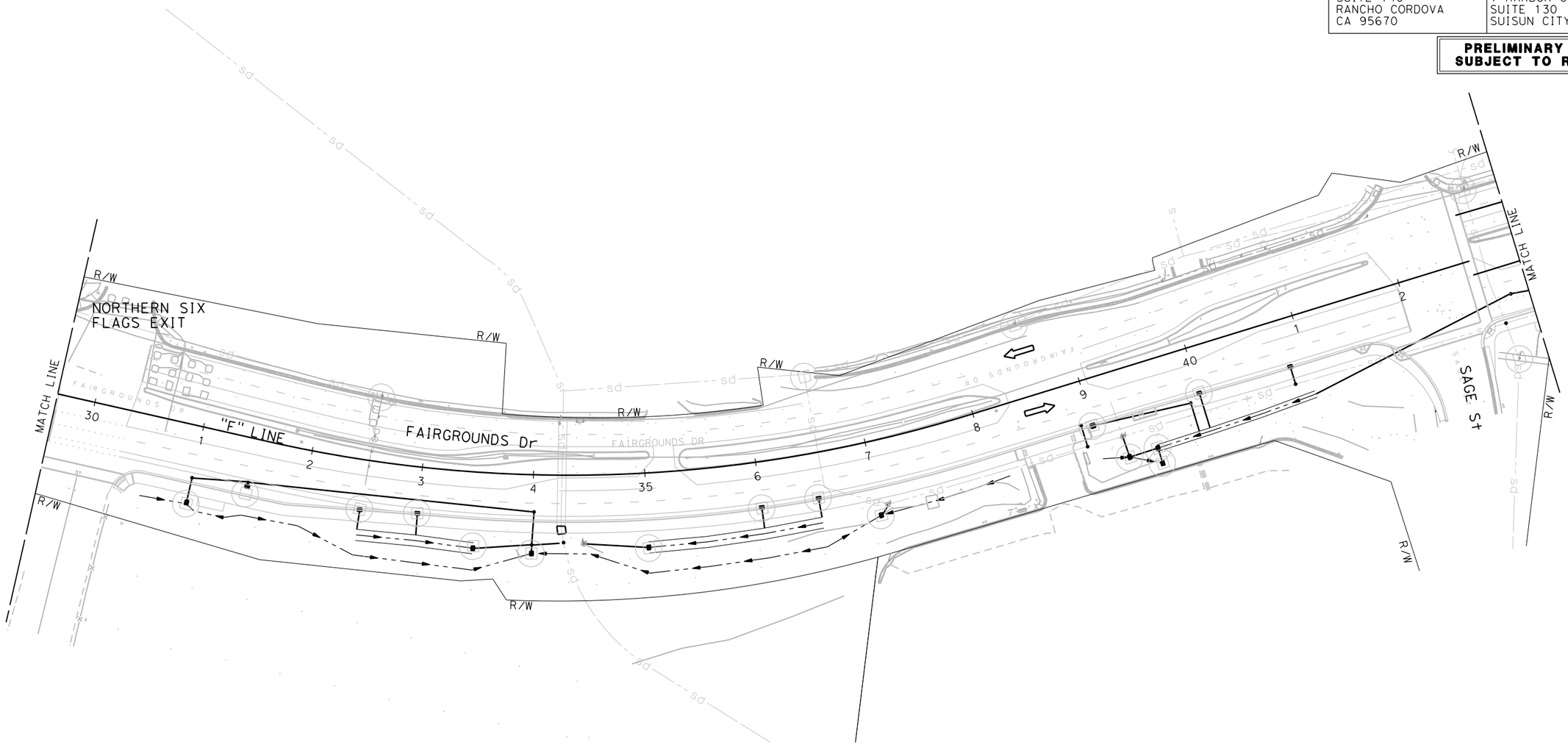

FOR LEGEND, SEE SHEET WPC-1

APPROVED FOR TEMPORARY WATER POLLUTION CONTROL WORK ONLY

TEMPORARY WATER POLLUTION CONTROL PLAN

STAGE 3C

SCALE: 1" = 50'

WPC-14

RALEIGH LANGSTON	R.L.	CALCULATED-DESIGNED BY	CONSULTANT FUNCTIONAL SUPERVISOR
ERIN McPHERSON	02/15/22	CHECKED BY	CARL GIBSON III
REVISED BY	DATE REVISED		

STATE OF CALIFORNIA - DEPARTMENT OF TRANSPORTATION

Caltrans

X:\SR 37_FAIRGROUNDS DRIVE\000_CAD\Sheets\014-Temp_WPC\GB-Plans\044A4414gb014.dgn

LAST REVISION 00-00-00 | DATE PLOTTED => 9/1/2022 | TIME PLOTTED => 4:40:26 PM

Dist	COUNTY	ROUTE	POST MILES TOTAL PROJECT	SHEET No.	TOTAL SHEETS
04	Sol	37	10.9		

REGISTERED CIVIL ENGINEER DATE

PLANS APPROVAL DATE

REGISTERED PROFESSIONAL ENGINEER No. Exp. CIVIL STATE OF CALIFORNIA

THE STATE OF CALIFORNIA OR ITS OFFICERS OR AGENTS SHALL NOT BE RESPONSIBLE FOR THE ACCURACY OR COMPLETENESS OF SCANNED COPIES OF THIS PLAN SHEET.

WMH CORPORATION
11070 WHITE ROCK RD
SUITE 140
RANCHO CORDOVA
CA 95670

SOLANO TRANSPORTATION AUTHORITY
1 HARBOR CENTER
SUITE 130
SUISUN CITY, CA 94585

PRELIMINARY PLANS SUBJECT TO REVISION

NOTE:

FOR ACCURATE RIGHT OF WAY DATA, CONTACT RIGHT OF WAY ENGINEERING AT THE DISTRICT OFFICE.

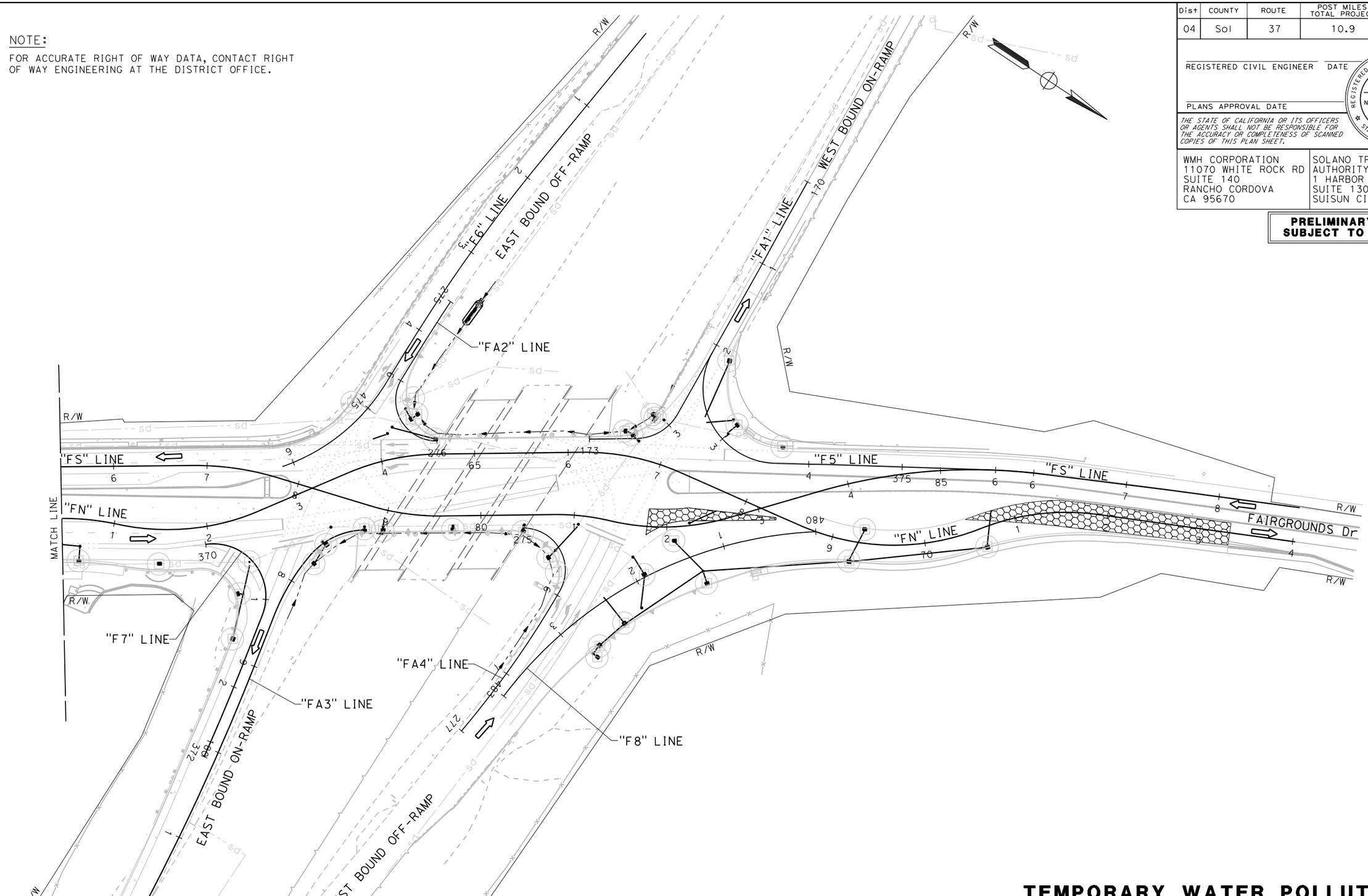

FOR LEGEND, SEE SHEET WPC-1

APPROVED FOR TEMPORARY WATER POLLUTION CONTROL WORK ONLY

TEMPORARY WATER POLLUTION CONTROL PLAN

STAGE 3C

SCALE: 1" = 50'

WPC-15

REVISED BY	DATE REVISED
R.L.	02/15/22

RALEIGH LANGSTON — ERIN McPHERSON — CALCULATED-DESIGNED BY — CHECKED BY — CARL GIBSON III — CONSULTANT FUNCTIONAL SUPERVISOR

STATE OF CALIFORNIA - DEPARTMENT OF TRANSPORTATION

X:\SR 37_FAIRGROUNDS DRIVE\000_CAD\Sheets\014-Temp_WPC\GB-Plans\044A4414gb015.dgn

LAST REVISION 00-00-00 | DATE PLOTTED => 9/1/2022 | TIME PLOTTED => 4:40:29 PM

Dist	COUNTY	ROUTE	POST MILES TOTAL PROJECT	SHEET No.	TOTAL SHEETS
04	Sol	37	10.9		

REGISTERED CIVIL ENGINEER DATE

PLANS APPROVAL DATE

REGISTERED PROFESSIONAL ENGINEER No. Exp. CIVIL STATE OF CALIFORNIA

THE STATE OF CALIFORNIA OR ITS OFFICERS OR AGENTS SHALL NOT BE RESPONSIBLE FOR THE ACCURACY OR COMPLETENESS OF SCANNED COPIES OF THIS PLAN SHEET.

WMH CORPORATION
11070 WHITE ROCK RD
SUITE 140
RANCHO CORDOVA
CA 95670

SOLANO TRANSPORTATION AUTHORITY
1 HARBOR CENTER
SUITE 130
SUISUN CITY, CA 94585

PRELIMINARY PLANS SUBJECT TO REVISION

NOTE:

FOR ACCURATE RIGHT OF WAY DATA, CONTACT RIGHT OF WAY ENGINEERING AT THE DISTRICT OFFICE.

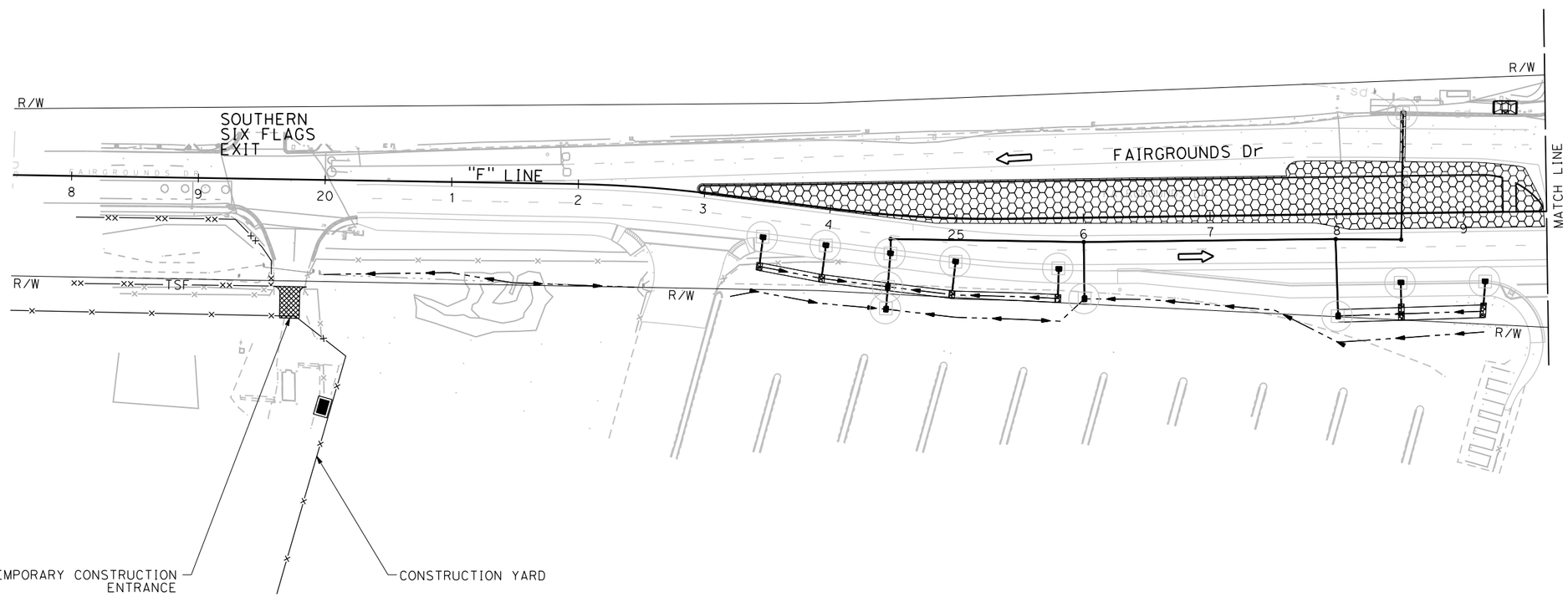

FOR LEGEND, SEE SHEET WPC-1

APPROVED FOR TEMPORARY WATER POLLUTION CONTROL WORK ONLY

TEMPORARY WATER POLLUTION CONTROL PLAN

STAGE 4

SCALE: 1" = 50'

WPC-16

REVISED BY	DATE REVISED
R.L.	02/15/22

CALCULATED-DESIGNED BY: RALEIGH LANGSTON
CHECKED BY: ERIN McPHERSON
CONSULTANT FUNCTIONAL SUPERVISOR: CARL GIBSON III

STATE OF CALIFORNIA - DEPARTMENT OF TRANSPORTATION

X:\SR 37_FAIRGROUNDS DRIVE\000_CAD\Sheets\014-Temp_WPC\GB-Plans\044A4414gb016.dgn

LAST REVISION 00-00-00 | DATE PLOTTED => 9/1/2022 | TIME PLOTTED => 4:40:47 PM

Dist	COUNTY	ROUTE	POST MILES TOTAL PROJECT	SHEET No.	TOTAL SHEETS
04	Sol	37	10.9		

REGISTERED CIVIL ENGINEER DATE

PLANS APPROVAL DATE

REGISTERED PROFESSIONAL ENGINEER No. Exp. CIVIL STATE OF CALIFORNIA

THE STATE OF CALIFORNIA OR ITS OFFICERS OR AGENTS SHALL NOT BE RESPONSIBLE FOR THE ACCURACY OR COMPLETENESS OF SCANNED COPIES OF THIS PLAN SHEET.

WMH CORPORATION
11070 WHITE ROCK RD
SUITE 140
RANCHO CORDOVA
CA 95670

SOLANO TRANSPORTATION AUTHORITY
1 HARBOR CENTER
SUITE 130
SUISUN CITY, CA 94585

PRELIMINARY PLANS SUBJECT TO REVISION

NOTE:

FOR ACCURATE RIGHT OF WAY DATA, CONTACT RIGHT OF WAY ENGINEERING AT THE DISTRICT OFFICE.

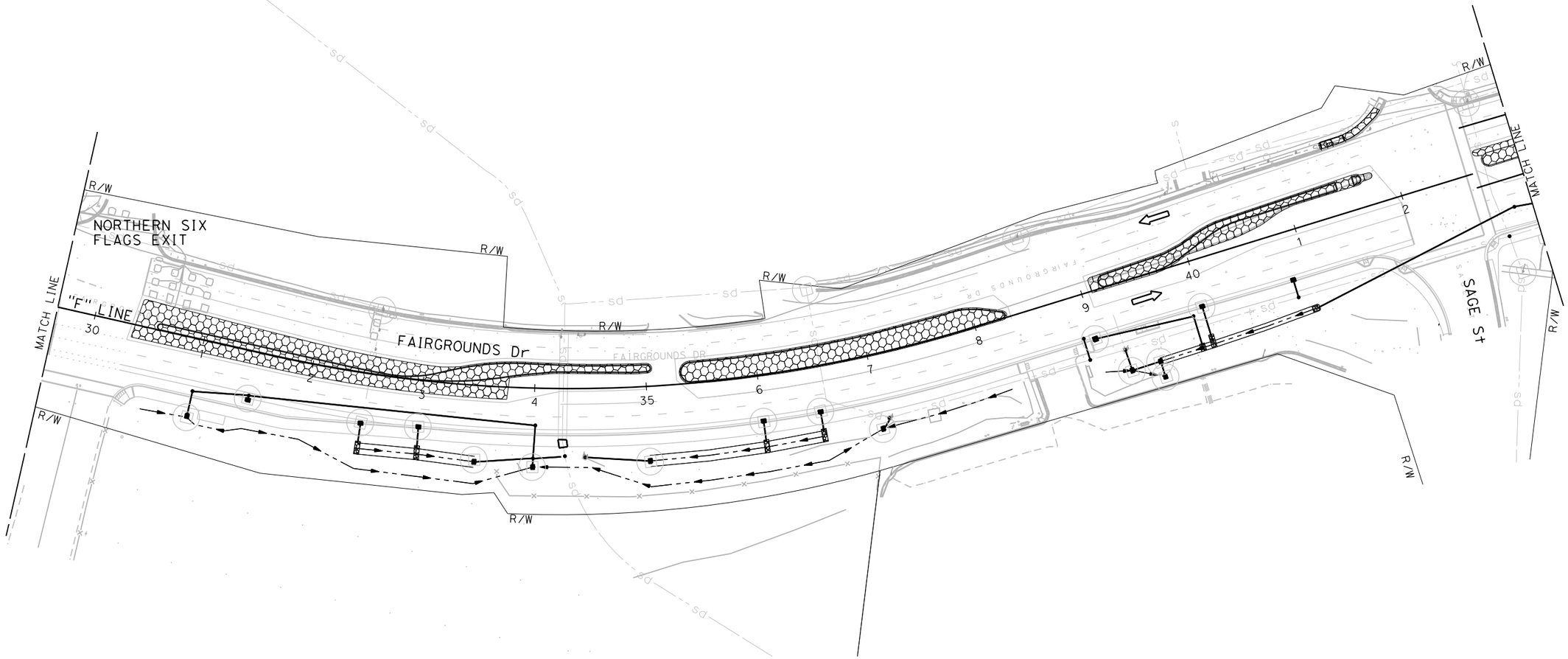

FOR LEGEND, SEE SHEET WPC-1

APPROVED FOR TEMPORARY WATER POLLUTION CONTROL WORK ONLY

TEMPORARY WATER POLLUTION CONTROL PLAN

STAGE 4

SCALE: 1" = 50'

WPC-17

REVISED BY	DATE REVISED
R.L.	02/15/22

RALEIGH LANGSTON — CALCULATED-DESIGNED BY

ERIN McPHERSON — CHECKED BY

CARL GIBSON III — CONSULTANT FUNCTIONAL SUPERVISOR

STATE OF CALIFORNIA - DEPARTMENT OF TRANSPORTATION

Caltrans

X:\SR 37_FAIRGROUNDS DRIVE\000_CAD\Sheets\014-Temp_WPC\GB-Plans\044A4414gb017.dgn

LAST REVISION 00-00-00 | DATE PLOTTED => 9/1/2022 | TIME PLOTTED => 4:40:52 PM

Dist	COUNTY	ROUTE	POST MILES TOTAL PROJECT	SHEET No.	TOTAL SHEETS
04	Sol	37	10.9		

REGISTERED CIVIL ENGINEER DATE

PLANS APPROVAL DATE

REGISTERED PROFESSIONAL ENGINEER No. Exp. CIVIL STATE OF CALIFORNIA

THE STATE OF CALIFORNIA OR ITS OFFICERS OR AGENTS SHALL NOT BE RESPONSIBLE FOR THE ACCURACY OR COMPLETENESS OF SCANNED COPIES OF THIS PLAN SHEET.

WMH CORPORATION
11070 WHITE ROCK RD
SUITE 140
RANCHO CORDOVA
CA 95670

SOLANO TRANSPORTATION AUTHORITY
1 HARBOR CENTER
SUITE 130
SUISUN CITY, CA 94585

PRELIMINARY PLANS SUBJECT TO REVISION

NOTE:

FOR ACCURATE RIGHT OF WAY DATA, CONTACT RIGHT OF WAY ENGINEERING AT THE DISTRICT OFFICE.

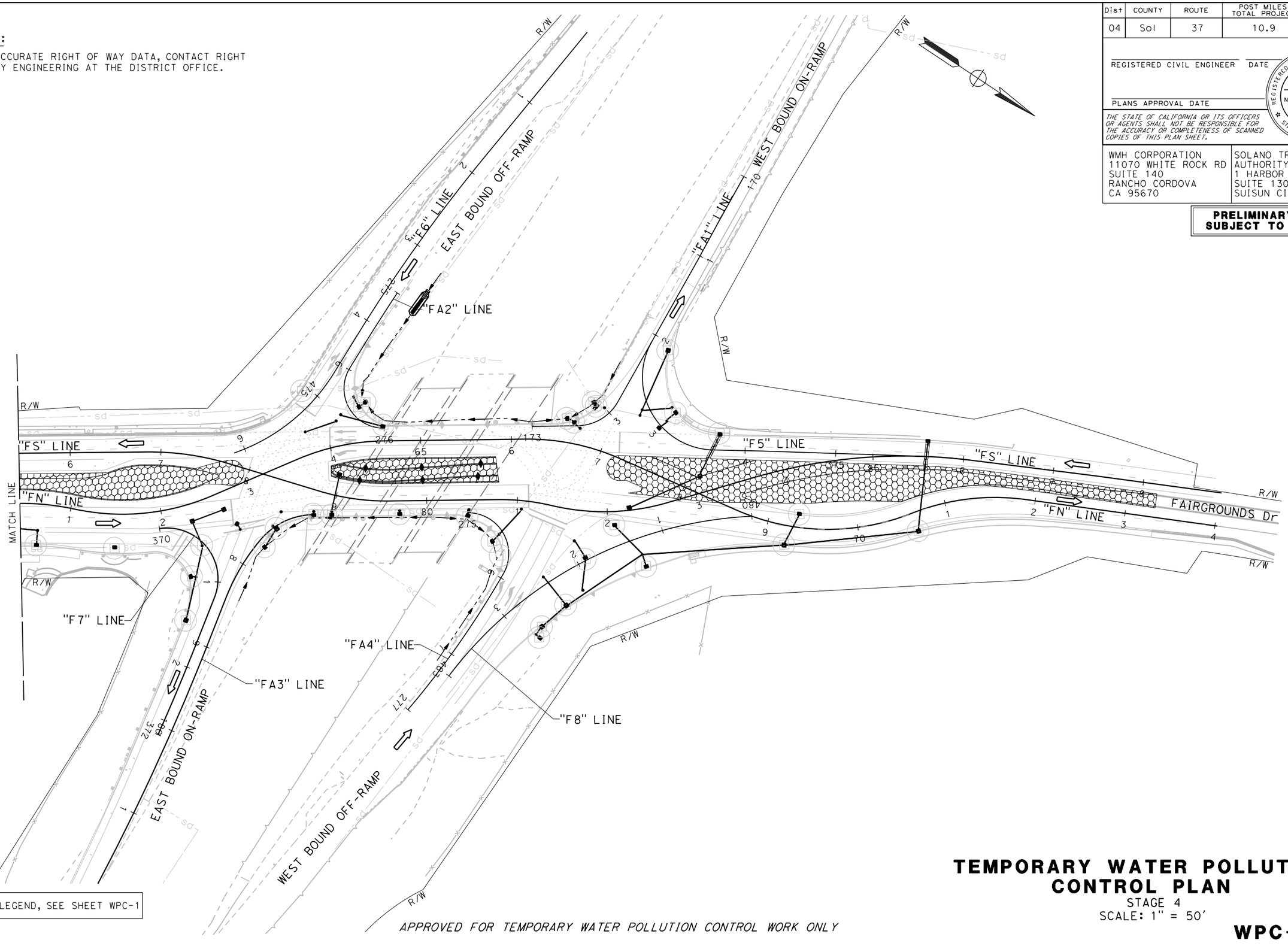

FOR LEGEND, SEE SHEET WPC-1

APPROVED FOR TEMPORARY WATER POLLUTION CONTROL WORK ONLY

TEMPORARY WATER POLLUTION CONTROL PLAN

STAGE 4

SCALE: 1" = 50'

WPC-18

REVISED BY	R.L.
DATE REVISED	02/15/22
CALCULATED-DESIGNED BY	RALEIGH LANGSTON
CHECKED BY	ERIN McPHERSON
CONSULTANT FUNCTIONAL SUPERVISOR	CARL GIBSON III

STATE OF CALIFORNIA - DEPARTMENT OF TRANSPORTATION

Caltrans

X:\SR 37_FAIRGROUNDS DRIVE\000_CAD\Sheets\014-Temp_WPC\GB-Plans\044A4414gb018.dgn

LAST REVISION 00-00-00 | DATE PLOTTED => 9/1/2022 | TIME PLOTTED => 4:40:55 PM

BORDER LAST REVISED 7/2/2010 | USERNAME => jvaldivia | DGN FILE => 044A4414gb018.dgn | RELATIVE BORDER SCALE IS IN INCHES 0 1 2 3 | UNIT 0738 | PROJECT NUMBER & PHASE 04000205841

Dist	COUNTY	ROUTE	POST MILES TOTAL PROJECT	SHEET No.	TOTAL SHEETS
04	Sol	37	10.9		

REGISTERED CIVIL ENGINEER DATE

PLANS APPROVAL DATE

REGISTERED PROFESSIONAL ENGINEER No. Exp. CIVIL STATE OF CALIFORNIA

THE STATE OF CALIFORNIA OR ITS OFFICERS OR AGENTS SHALL NOT BE RESPONSIBLE FOR THE ACCURACY OR COMPLETENESS OF SCANNED COPIES OF THIS PLAN SHEET.

WMH CORPORATION
11070 WHITE ROCK RD
SUITE 140
RANCHO CORDOVA
CA 95670

SOLANO TRANSPORTATION AUTHORITY
1 HARBOR CENTER
SUITE 130
SUISUN CITY, CA 94585

PRELIMINARY PLANS SUBJECT TO REVISION

NOTES:

1. FOR ACCURATE RIGHT OF WAY DATA, CONTACT RIGHT OF WAY ENGINEERING AT THE DISTRICT OFFICE.

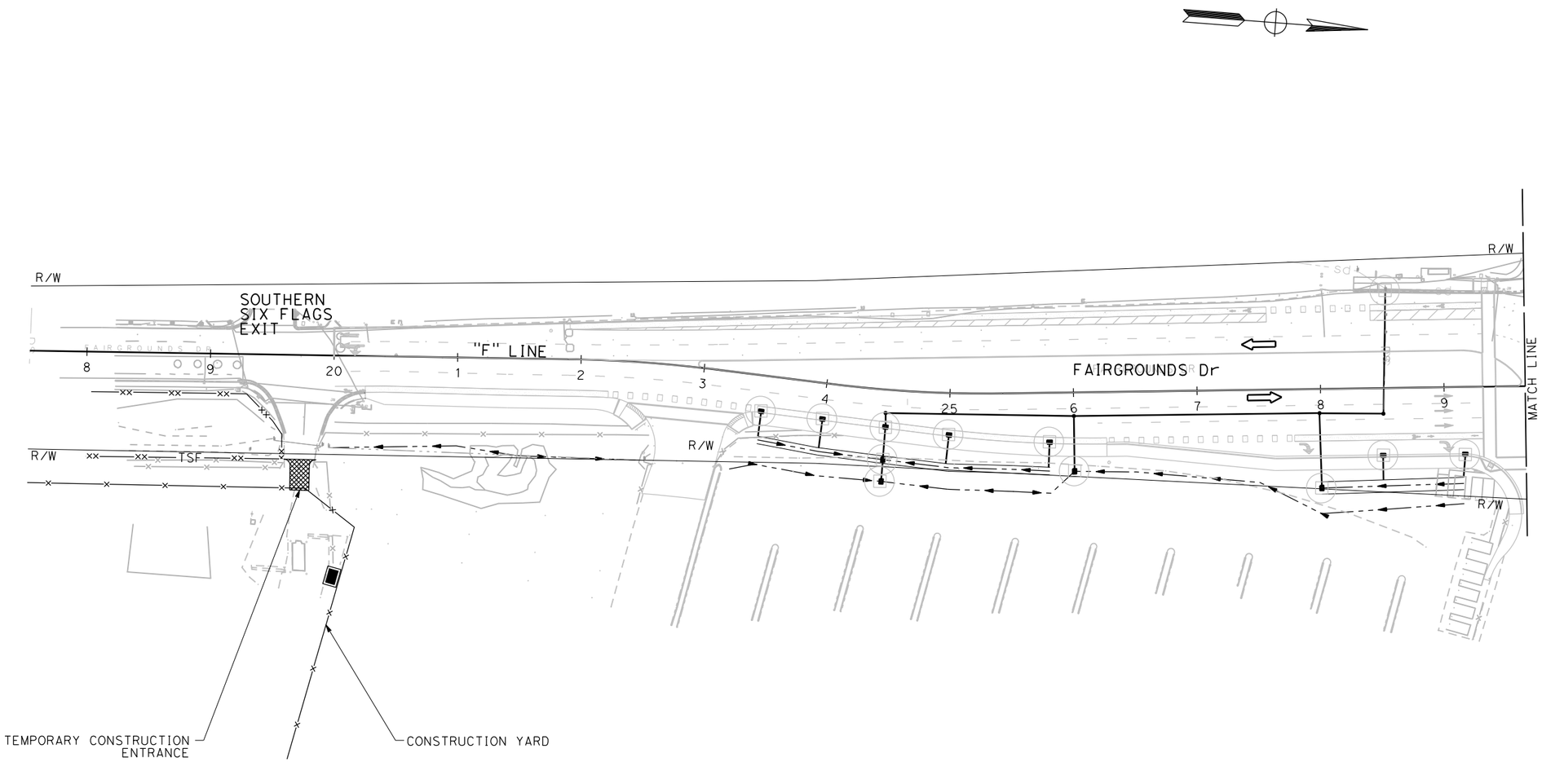

FOR LEGEND, SEE SHEET WPC-1

APPROVED FOR TEMPORARY WATER POLLUTION CONTROL WORK ONLY

TEMPORARY WATER POLLUTION CONTROL PLAN

STAGE 5
SCALE: 1" = 50'

WPC-19

REVISED BY	DATE REVISED
R.L.	02/15/22

CALCULATED-DESIGNED BY: RALEIGH LANGSTON
CHECKED BY: ERIN McPHERSON

CONSULTANT FUNCTIONAL SUPERVISOR: CARL GIBSON III

STATE OF CALIFORNIA - DEPARTMENT OF TRANSPORTATION
Caltrans

X:\SR 37_FAIRGROUNDS DRIVE\000_CAD\Sheets\014-Temp_WPC\GB-Plans\044A4414gb019.dgn

LAST REVISION 00-00-00 | DATE PLOTTED => 9/1/2022 | TIME PLOTTED => 4:41:14 PM

Dist	COUNTY	ROUTE	POST MILES TOTAL PROJECT	SHEET No.	TOTAL SHEETS
04	Sol	37	10.9		

REGISTERED CIVIL ENGINEER DATE

PLANS APPROVAL DATE

REGISTERED PROFESSIONAL ENGINEER No. Exp. CIVIL STATE OF CALIFORNIA

THE STATE OF CALIFORNIA OR ITS OFFICERS OR AGENTS SHALL NOT BE RESPONSIBLE FOR THE ACCURACY OR COMPLETENESS OF SCANNED COPIES OF THIS PLAN SHEET.

WMH CORPORATION
11070 WHITE ROCK RD
SUITE 140
RANCHO CORDOVA
CA 95670

SOLANO TRANSPORTATION AUTHORITY
1 HARBOR CENTER
SUITE 130
SUISUN CITY, CA 94585

PRELIMINARY PLANS SUBJECT TO REVISION

NOTE:

FOR ACCURATE RIGHT OF WAY DATA, CONTACT RIGHT OF WAY ENGINEERING AT THE DISTRICT OFFICE.

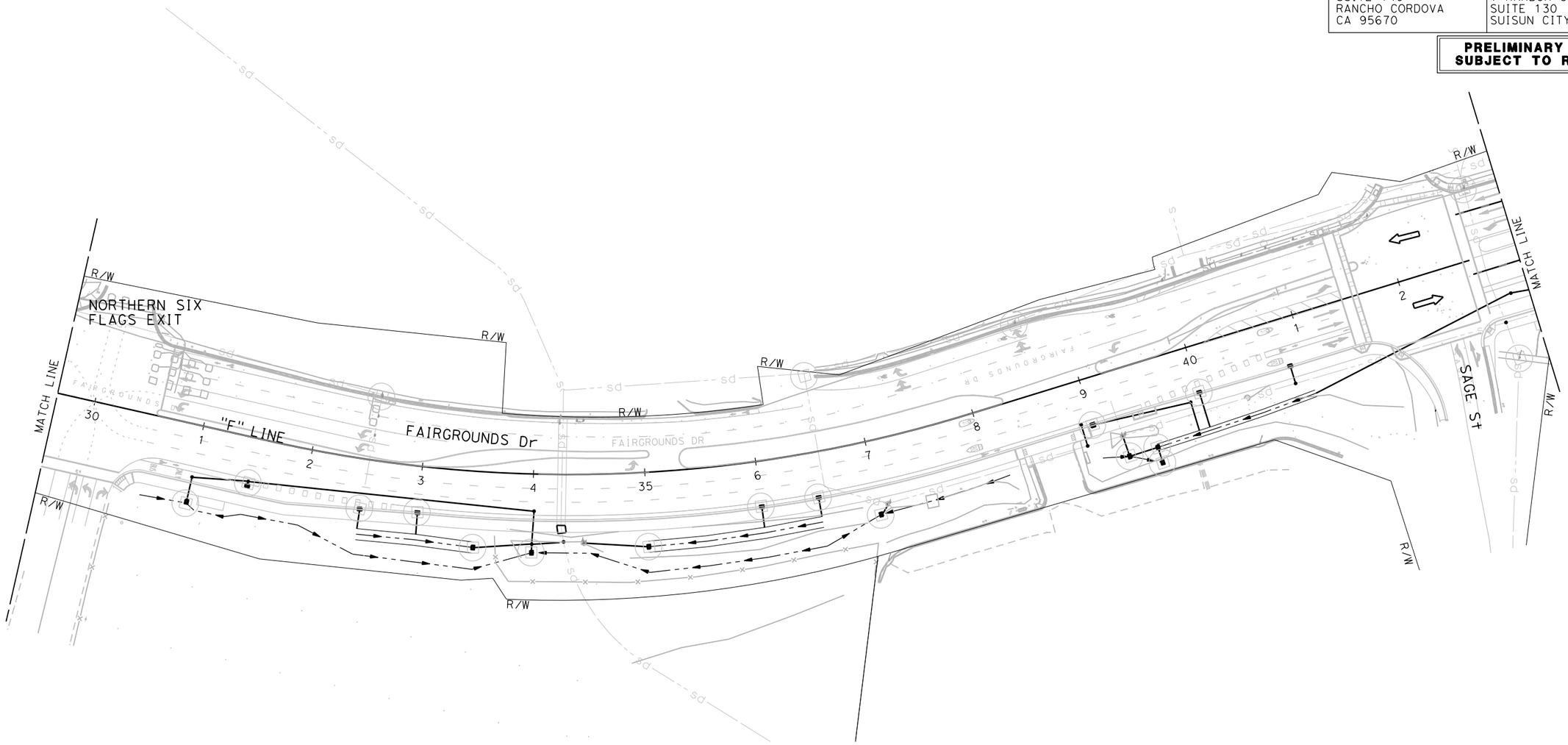

FOR LEGEND, SEE SHEET WPC-1

APPROVED FOR TEMPORARY WATER POLLUTION CONTROL WORK ONLY

TEMPORARY WATER POLLUTION CONTROL PLAN

STAGE 5

SCALE: 1" = 50'

WPC-20

REVISED BY	DATE REVISED
R.L.	02/15/22

CALCULATED-DESIGNED BY: RALEIGH LANGSTON
CHECKED BY: ERIN McPHERSON
CONSULTANT FUNCTIONAL SUPERVISOR: CARL GIBSON III

STATE OF CALIFORNIA - DEPARTMENT OF TRANSPORTATION

X:\SR 37_FAIRGROUNDS DRIVE\000_CAD\Sheets\014-Temp_WPC\GB-Plans\044A4414gb020.dgn

LAST REVISION 00-00-00 | DATE PLOTTED => 9/1/2022 | TIME PLOTTED => 4:41:19 PM

BORDER LAST REVISED 7/2/2010 | USERNAME => jvaldivia | DGN FILE => 044A4414gb020.dgn | RELATIVE BORDER SCALE IS IN INCHES 0 1 2 3 | UNIT 0738 | PROJECT NUMBER & PHASE 04000205841

Dist	COUNTY	ROUTE	POST MILES TOTAL PROJECT	SHEET No.	TOTAL SHEETS
04	Sol	37	10.9		

REGISTERED CIVIL ENGINEER DATE

PLANS APPROVAL DATE

REGISTERED PROFESSIONAL ENGINEER No. Exp. CIVIL STATE OF CALIFORNIA

THE STATE OF CALIFORNIA OR ITS OFFICERS OR AGENTS SHALL NOT BE RESPONSIBLE FOR THE ACCURACY OR COMPLETENESS OF SCANNED COPIES OF THIS PLAN SHEET.

WMH CORPORATION
11070 WHITE ROCK RD
SUITE 140
RANCHO CORDOVA
CA 95670

SOLANO TRANSPORTATION AUTHORITY
1 HARBOR CENTER
SUITE 130
SUISUN CITY, CA 94585

PRELIMINARY PLANS SUBJECT TO REVISION

NOTE:

FOR ACCURATE RIGHT OF WAY DATA, CONTACT RIGHT OF WAY ENGINEERING AT THE DISTRICT OFFICE.

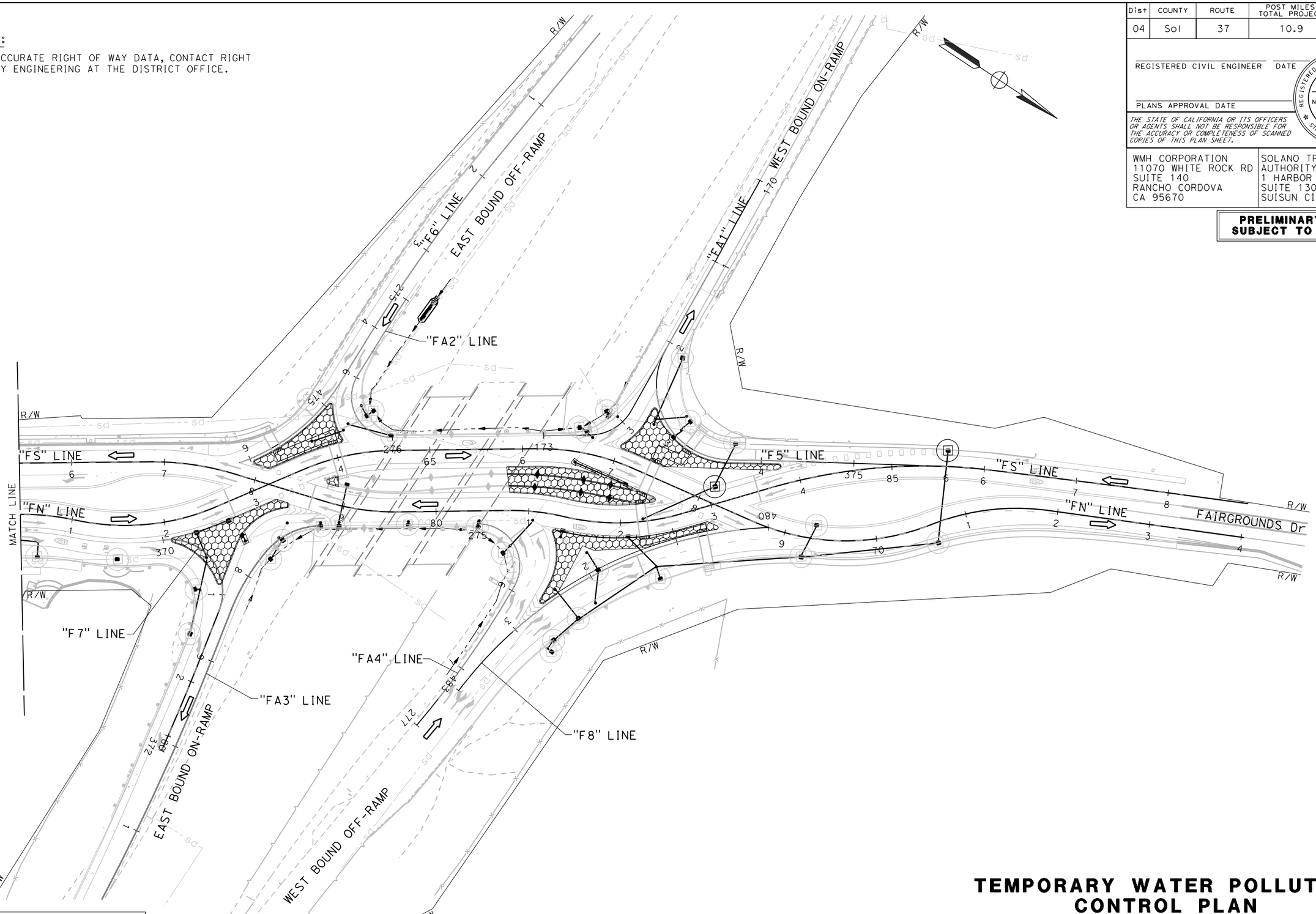

FOR LEGEND, SEE SHEET WPC-1

APPROVED FOR TEMPORARY WATER POLLUTION CONTROL WORK ONLY

TEMPORARY WATER POLLUTION CONTROL PLAN

STAGE 5

SCALE: 1" = 50'

WPC-21

REVISED BY	DATE REVISED
R.L.	02/15/22

RALEIGH LANGSTON — CALCULATED-DESIGNED BY

ERIN McPHERSON — CHECKED BY

CARL GIBSON III — CONSULTANT FUNCTIONAL SUPERVISOR

STATE OF CALIFORNIA - DEPARTMENT OF TRANSPORTATION

Caltrans

X:\SR 37_FAIRGROUNDS DRIVE\000_CAD\Sheets\014-Temp_WPC\GB-Plans\044A4414gb021.dgn

LAST REVISION 00-00-00 | DATE PLOTTED => 9/1/2022 TIME PLOTTED => 4:41:22 PM

Dist	COUNTY	ROUTE	POST MILES TOTAL PROJECT	SHEET No.	TOTAL SHEETS
04	Sol	37	10.9		

REGISTERED CIVIL ENGINEER DATE

PLANS APPROVAL DATE

REGISTERED PROFESSIONAL ENGINEER No. Exp. CIVIL STATE OF CALIFORNIA

THE STATE OF CALIFORNIA OR ITS OFFICERS OR AGENTS SHALL NOT BE RESPONSIBLE FOR THE ACCURACY OR COMPLETENESS OF SCANNED COPIES OF THIS PLAN SHEET.

WMH CORPORATION
11070 WHITE ROCK RD
SUITE 140
RANCHO CORDOVA
CA 95670

SOLANO TRANSPORTATION AUTHORITY
1 HARBOR CENTER
SUITE 130
SUISUN CITY, CA 94585

PRELIMINARY PLANS SUBJECT TO REVISION

TEMPORARY WATER POLLUTION CONTROL QUANTITIES

STAGE No.	TEMPORARY FIBER ROLL	TEMPORARY DRAINAGE INLET PROTECTION	TEMPORARY COVER	TEMPORARY SILT FENCE	TEMPORARY CONSTRUCTION ENTRANCE	MOVE-IN/MOVE-OUT (TEMPORARY EROSION CONTROL)	CONCRETE WASHOUT
	LF	EA	SQYD	LF	EA	EA	EA
STAGE 1	5,613	11	169	3,393	2	1	1
STAGE 2	395	46		353		1	1
STAGE 3A		11		353		1	1
STAGE 3B				353			1
STAGE 3C				353			1
STAGE 4				353			1
STAGE 5		2		353		1	1
TOTAL	6,008	70	169	5,511	2	4	7

TEMPORARY WATER POLLUTION CONTROL QUANTITIES

WPCQ-1

R.L.	02/15/22	REVISED BY	DATE REVISED
RALEIGH LANGSTON	CARL GIBSON III	CALCULATED-DESIGNED BY	CHECKED BY
CARL GIBSON III	CONSULTANT FUNCTIONAL SUPERVISOR		

STATE OF CALIFORNIA - DEPARTMENT OF TRANSPORTATION

Caltrans

X:\SR 37_FAIRGROUNDS DRIVE\000_CAD\Sheets\014-Temp_WPC\GD-Quantities\044A4414gd001.dgn

LAST REVISION 00-00-00 | DATE PLOTTED => 9/1/2022 TIME PLOTTED => 4:49:24 PM

Dist	COUNTY	ROUTE	POST MILES TOTAL PROJECT	SHEET No.	TOTAL SHEETS
04	Sol	37	10.9		

REGISTERED CIVIL ENGINEER DATE

PLANS APPROVAL DATE

REGISTERED PROFESSIONAL ENGINEER No. Exp. CIVIL STATE OF CALIFORNIA

THE STATE OF CALIFORNIA OR ITS OFFICERS OR AGENTS SHALL NOT BE RESPONSIBLE FOR THE ACCURACY OR COMPLETENESS OF SCANNED COPIES OF THIS PLAN SHEET.

WMH CORPORATION
11070 WHITE ROCK RD
SUITE 140
RANCHO CORDOVA
CA 95670

SOLANO TRANSPORTATION AUTHORITY
1 HARBOR CENTER
SUITE 130
SUISUN CITY, CA 94585

PRELIMINARY PLANS SUBJECT TO REVISION

NOTE:

FOR ACCURATE RIGHT OF WAY DATA, CONTACT RIGHT OF WAY ENGINEERING AT THE DISTRICT OFFICE.

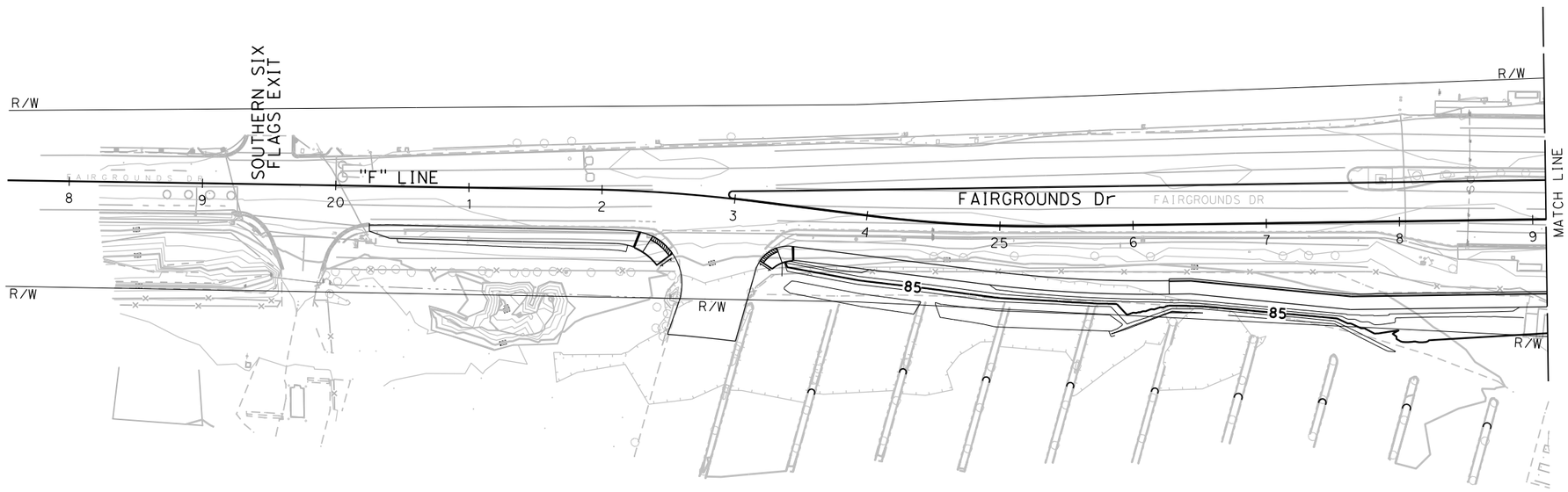

CONTOUR GRADING

SCALE: 1" = 50'

G-1

A.C.	02/15/22	ARIANA CASTILLO	CALCULATED-DESIGNED BY
REVISED BY	DATE REVISED	CARL GIBSON III	CHECKED BY
CONSULTANT FUNCTIONAL SUPERVISOR		CARL GIBSON III	

STATE OF CALIFORNIA - DEPARTMENT OF TRANSPORTATION

Caltrans

X:\SR 37_FAIRGROUNDS DRIVE\000_CAD\Sheets\016-Contour_Grading\044A4414ha001.dgn

LAST REVISION 00-00-00 | DATE PLOTTED => 5/18/2022 TIME PLOTTED => 9:36:56 AM

BORDER LAST REVISED 7/2/2010 | USERNAME => jvaldivia DGN FILE => 044A4414ha001.dgn | RELATIVE BORDER SCALE IS IN INCHES 0 1 2 3 | UNIT 0738 | PROJECT NUMBER & PHASE 04000205841

Dist	COUNTY	ROUTE	POST MILES TOTAL PROJECT	SHEET No.	TOTAL SHEETS
04	Sol	37	10.9		

REGISTERED CIVIL ENGINEER DATE

PLANS APPROVAL DATE

REGISTERED PROFESSIONAL ENGINEER No. Exp. CIVIL STATE OF CALIFORNIA

THE STATE OF CALIFORNIA OR ITS OFFICERS OR AGENTS SHALL NOT BE RESPONSIBLE FOR THE ACCURACY OR COMPLETENESS OF SCANNED COPIES OF THIS PLAN SHEET.

WMH CORPORATION
11070 WHITE ROCK RD
SUITE 140
RANCHO CORDOVA
CA 95670

SOLANO TRANSPORTATION AUTHORITY
1 HARBOR CENTER
SUITE 130
SUISUN CITY, CA 94585

PRELIMINARY PLANS SUBJECT TO REVISION

NOTE:

FOR ACCURATE RIGHT OF WAY DATA, CONTACT RIGHT OF WAY ENGINEERING AT THE DISTRICT OFFICE.

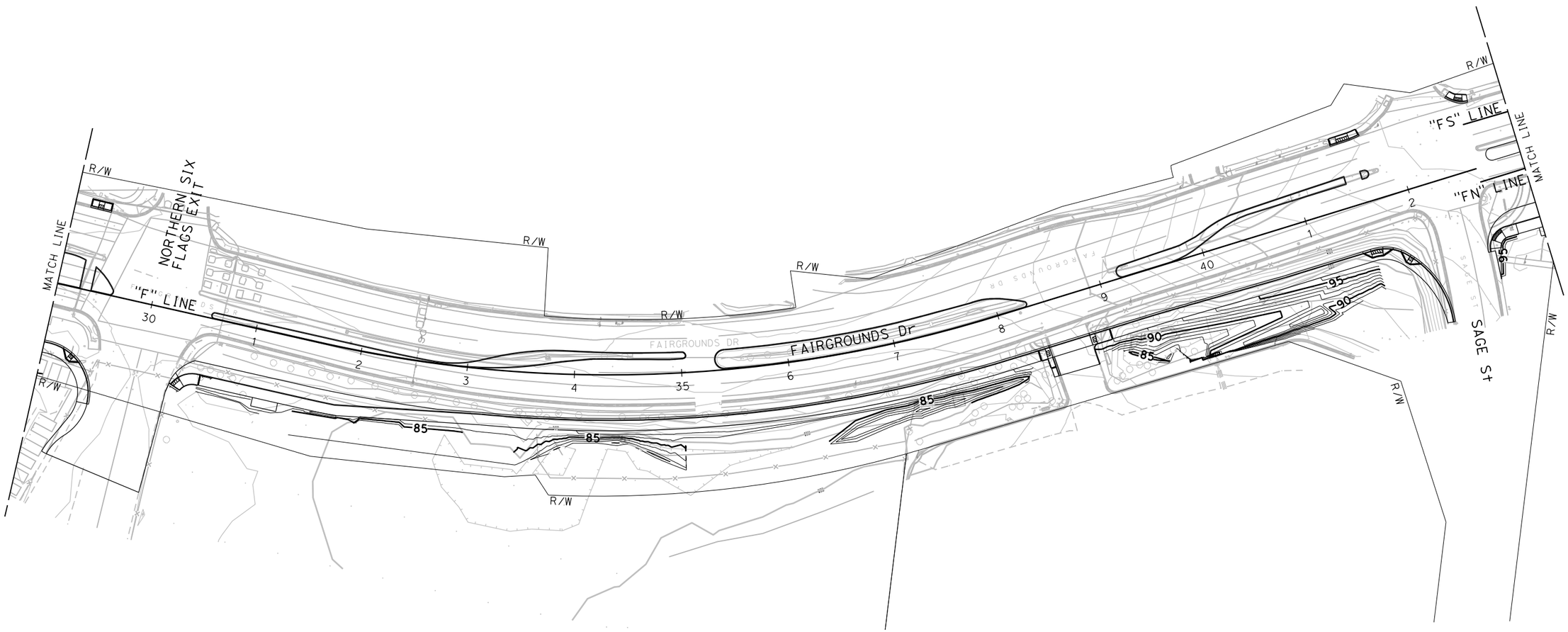

CONTOUR GRADING

SCALE: 1" = 50'

G-2

REVISED BY	DATE REVISED
A.C.	02/15/22

CALCULATED-DESIGNED BY: ARIANA CASTILLO
CHECKED BY: CARL GIBSON III
CONSULTANT FUNCTIONAL SUPERVISOR: CARL GIBSON III

STATE OF CALIFORNIA - DEPARTMENT OF TRANSPORTATION

Caltrans

X:\SR 37_FAIRGROUNDS DRIVE\000_CAD\Sheets\016-Contour_Grading\044A4414ha002.dgn

LAST REVISION 00-00-00 | DATE PLOTTED => 5/18/2022 | TIME PLOTTED => 9:36:59 AM

BORDER LAST REVISED 7/2/2010 | USERNAME => jvaldivia | DGN FILE => 044A4414ha002.dgn | RELATIVE BORDER SCALE IS IN INCHES 0 1 2 3 | UNIT 0738 | PROJECT NUMBER & PHASE 04000205841

Dist	COUNTY	ROUTE	POST MILES TOTAL PROJECT	SHEET No.	TOTAL SHEETS
04	Sol	37	10.9		

REGISTERED CIVIL ENGINEER DATE

PLANS APPROVAL DATE

REGISTERED PROFESSIONAL ENGINEER No. Exp. CIVIL STATE OF CALIFORNIA

THE STATE OF CALIFORNIA OR ITS OFFICERS OR AGENTS SHALL NOT BE RESPONSIBLE FOR THE ACCURACY OR COMPLETENESS OF SCANNED COPIES OF THIS PLAN SHEET.

WMH CORPORATION
11070 WHITE ROCK RD
SUITE 140
RANCHO CORDOVA
CA 95670

SOLANO TRANSPORTATION AUTHORITY
1 HARBOR CENTER
SUITE 130
SUISUN CITY, CA 94585

PRELIMINARY PLANS SUBJECT TO REVISION

NOTE:

FOR ACCURATE RIGHT OF WAY DATA, CONTACT RIGHT OF WAY ENGINEERING AT THE DISTRICT OFFICE.

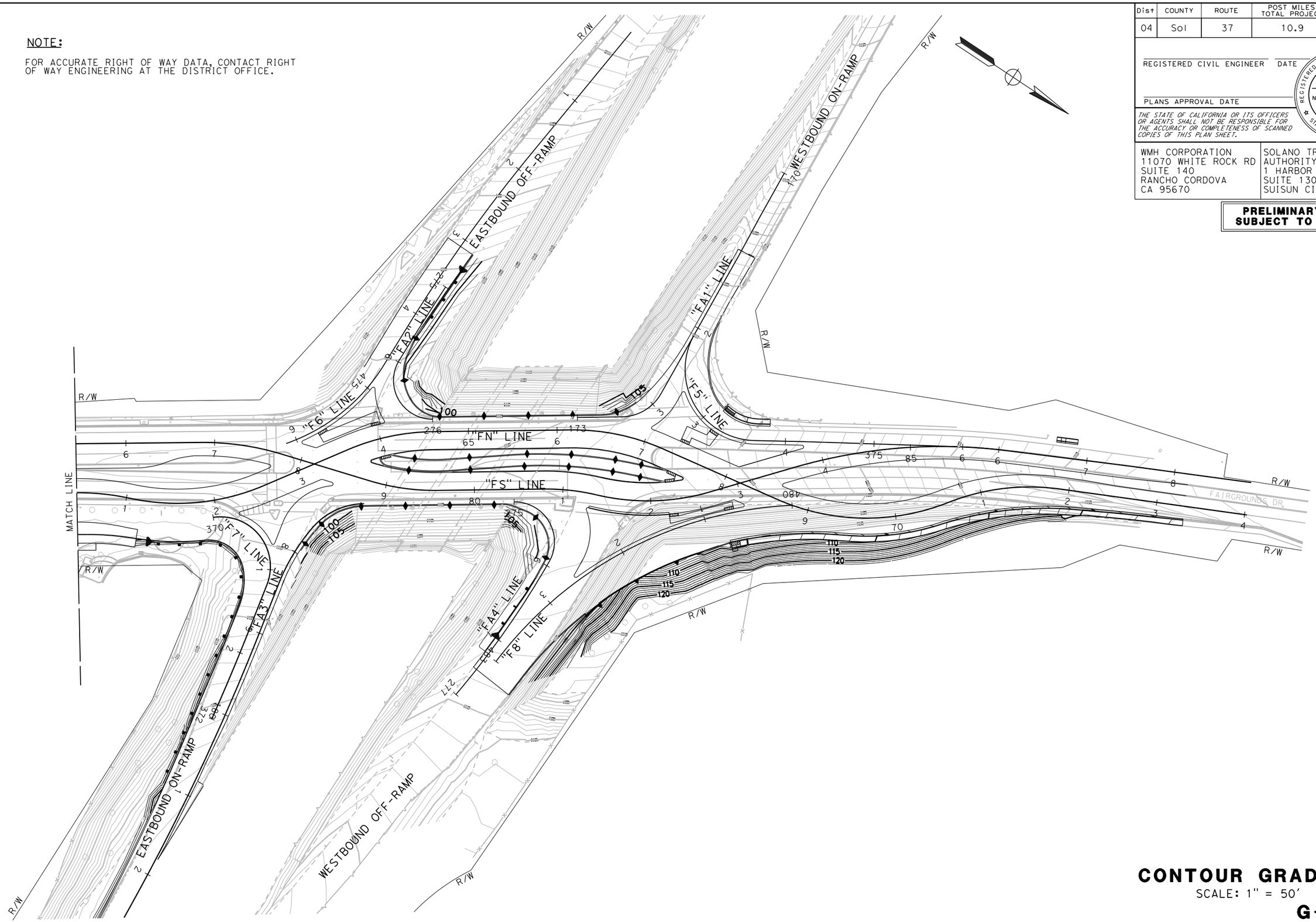

CONTOUR GRADING

SCALE: 1" = 50'

G-3

A.C.	02/15/22	REVISED BY / DATE REVISED
ARIANA CASTILLO	CARL GIBSON III	CALCULATED-DESIGNED BY / CHECKED BY
CARL GIBSON III		CONSULTANT FUNCTIONAL SUPERVISOR

STATE OF CALIFORNIA - DEPARTMENT OF TRANSPORTATION

Caltrans

X:\SR 37_FAIRGROUNDS DRIVE\000_CAD\Sheets\016-Contour_Grading\044A4414ha003.dgn

LAST REVISION 00-00-00 | DATE PLOTTED => 5/18/2022 | TIME PLOTTED => 9:37:05 AM

BORDER LAST REVISED 7/2/2010 | USERNAME => jvaldivia | DGN FILE => 044A4414ha003.dgn | RELATIVE BORDER SCALE IS IN INCHES 0 1 2 3 | UNIT 0738 | PROJECT NUMBER & PHASE 04000205841

Dist	COUNTY	ROUTE	POST MILES TOTAL PROJECT	SHEET No.	TOTAL SHEETS
04	Sol	37	10.9		

REGISTERED CIVIL ENGINEER DATE

PLANS APPROVAL DATE

REGISTERED PROFESSIONAL ENGINEER No. Exp. CIVIL STATE OF CALIFORNIA

THE STATE OF CALIFORNIA OR ITS OFFICERS OR AGENTS SHALL NOT BE RESPONSIBLE FOR THE ACCURACY OR COMPLETENESS OF SCANNED COPIES OF THIS PLAN SHEET.

WMH CORPORATION
11070 WHITE ROCK RD
SUITE 140
RANCHO CORDOVA
CA 95670

SOLANO TRANSPORTATION AUTHORITY
1 HARBOR CENTER
SUITE 130
SUISUN CITY, CA 94585

PRELIMINARY PLANS SUBJECT TO REVISION

NOTES:

1. FOR ACCURATE RIGHT OF WAY DATA, CONTACT RIGHT OF WAY ENGINEERING AT THE DISTRICT OFFICE.
2. UNLESS NOTED OTHERWISE, STATION AND OFFSET TIES TO DRAINAGE STRUCTURES ARE MEASURED PER THE DETAILS ON DRAINAGE DETAILS SHEET DD-1.
3. STANDARD INLET DEPRESSIONS, PER STANDARD PLAN D78B, SHALL BE CONSTRUCTED OF 8 INCH THICK PORTLAND CEMENT CONCRETE. WHERE LOCATED WITHIN PAVED ASPHALT SHOULDERS, ISOLATION JOINTS ARE NOT REQUIRED. ASPHALT INLET DEPRESSIONS SHALL NOT BE ALLOWED.
4. FOR UTILITY INFORMATION, SEE UTILITY SHEETS.
5. CONTRACTOR SHALL POSITIVELY DETERMINE ALL HORIZONTAL AND VERTICAL LOCATIONS OF ALL UTILITIES PRIOR TO ORDERING MATERIALS OF ANY COMPONENT OF ANY DRAINAGE SYSTEM.
6. FOR ADDITIONAL PERFORATED PIPE INFORMATION, SEE DRAINAGE DETAILS.

LEGEND:

- XXX — DRAINAGE SYSTEM NUMBER
- XX — DRAINAGE UNIT NUMBER
- BIOFILTRATION SWALE (SEE DRAINAGE DETAILS)
- ROCK SLOPE PROTECTION (SEE DRAINAGE DETAILS)
- FENCE

ABBREVIATIONS:

BFS	BIOFILTRATION SWALE
CC	CURB CUT (SEE DETAILS)
CCOM	CURB CUT OUTLET MODIFICATION
CFES	CONCRETE FLARED END SECTION

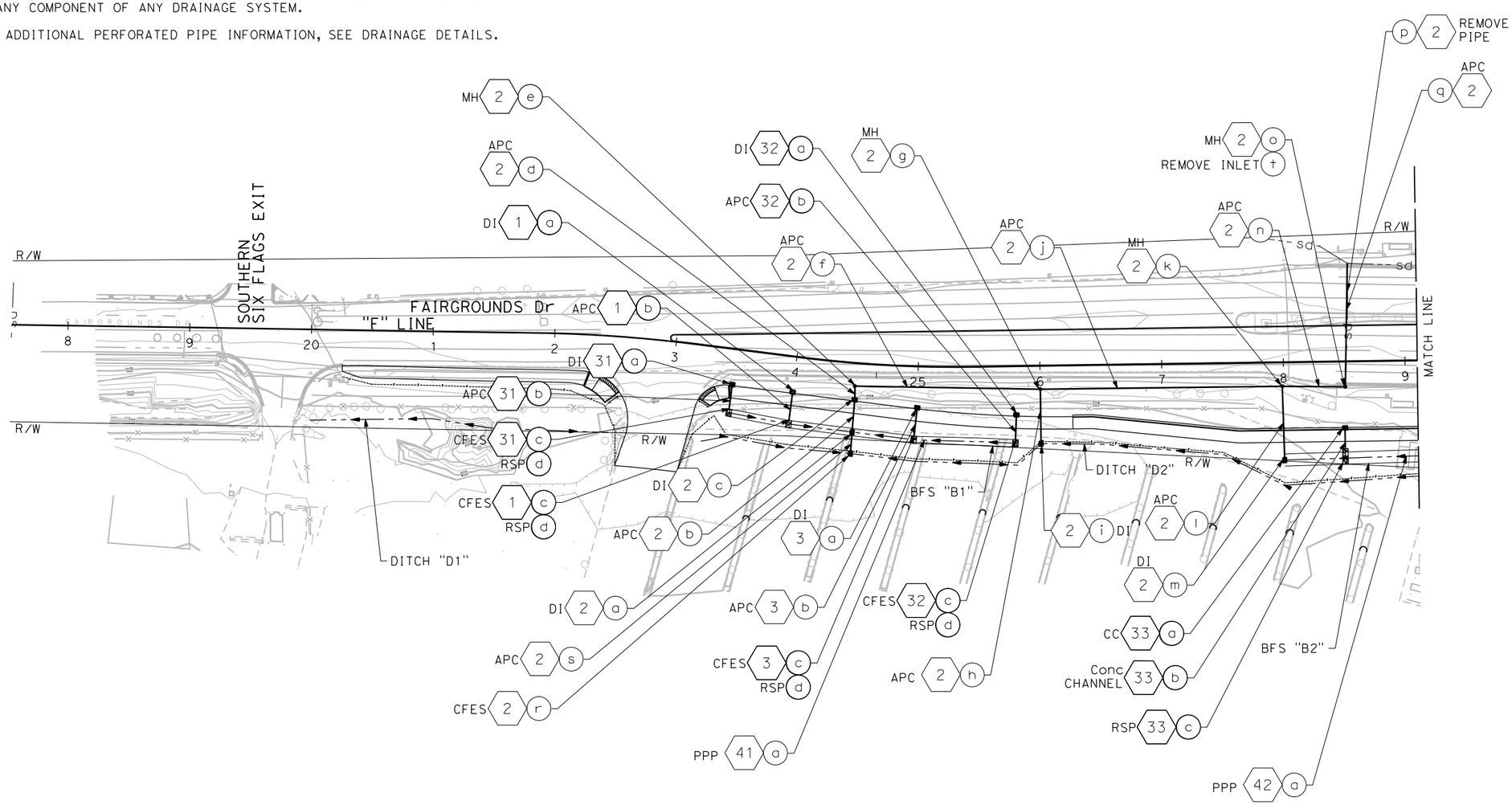

APPROVED FOR DRAINAGE WORK ONLY

DRAINAGE PLAN

SCALE: 1" = 50'

D-1

REVISED BY	DATE REVISED
J.R.	02/15/22

CALCULATED-DESIGNED BY: JESUS RICO
CHECKED BY: CARL GIBSON III
CONSULTANT FUNCTIONAL SUPERVISOR: CARL GIBSON III

STATE OF CALIFORNIA - DEPARTMENT OF TRANSPORTATION

X:\SR 37_FAIRGROUNDS DRIVE\000_CAD\Sheets\017-Drainage\1A-Plans\044A4414ia001.dgn

LAST REVISION 00-00-00 | DATE PLOTTED => 9/1/2022 | TIME PLOTTED => 12:33:36 AM

Dist	COUNTY	ROUTE	POST MILES TOTAL PROJECT	SHEET No.	TOTAL SHEETS
04	Sol	37	10.9		

REGISTERED CIVIL ENGINEER DATE

PLANS APPROVAL DATE

REGISTERED PROFESSIONAL ENGINEER No. Exp. CIVIL STATE OF CALIFORNIA

THE STATE OF CALIFORNIA OR ITS OFFICERS OR AGENTS SHALL NOT BE RESPONSIBLE FOR THE ACCURACY OR COMPLETENESS OF SCANNED COPIES OF THIS PLAN SHEET.

WMH CORPORATION
11070 WHITE ROCK RD
SUITE 140
RANCHO CORDOVA
CA 95670

SOLANO TRANSPORTATION AUTHORITY
1 HARBOR CENTER
SUITE 130
SUISUN CITY, CA 94585

PRELIMINARY PLANS SUBJECT TO REVISION

NOTE:

FOR ACCURATE RIGHT OF WAY DATA, CONTACT RIGHT OF WAY ENGINEERING AT THE DISTRICT OFFICE.

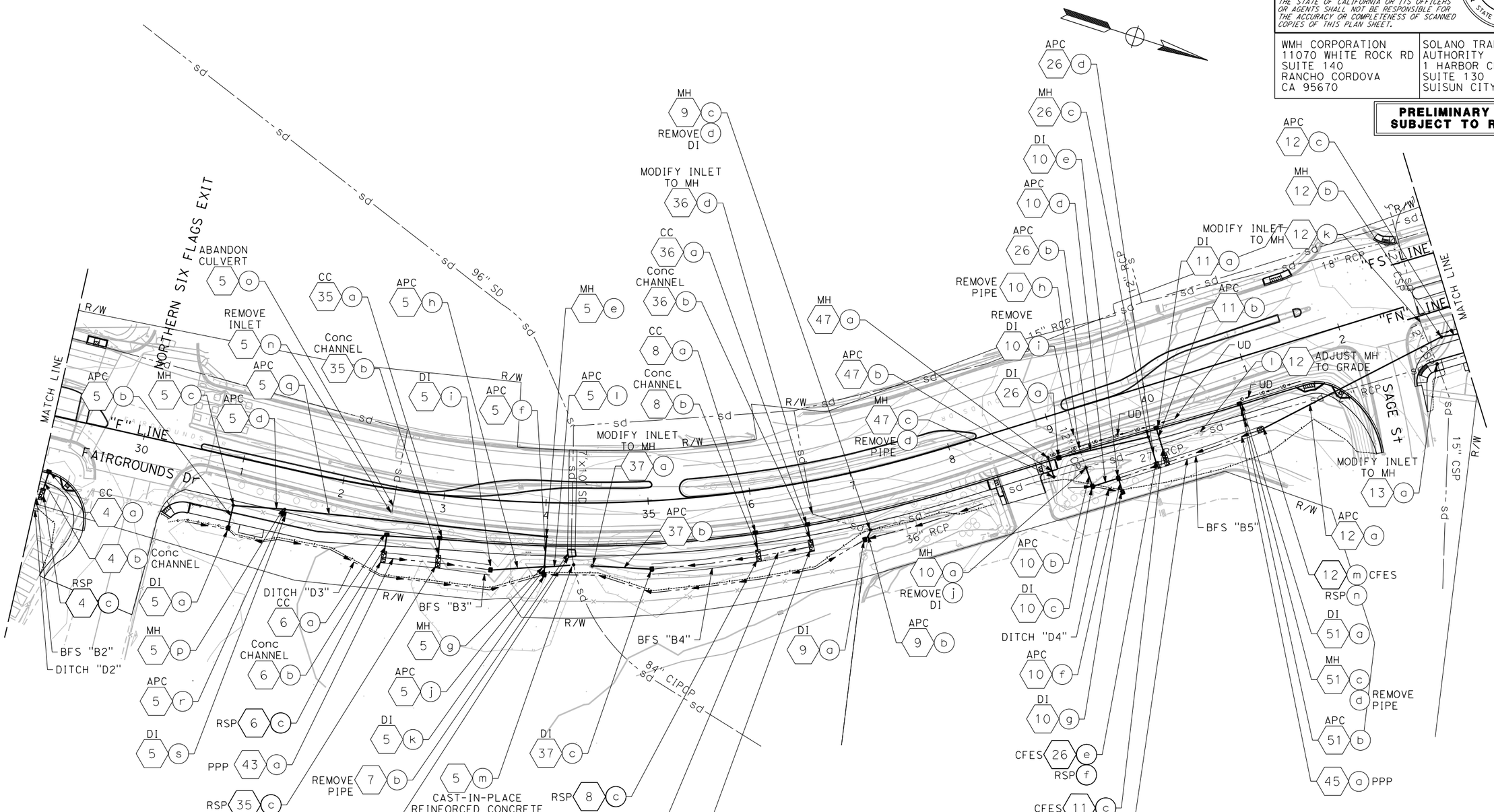

DRAINAGE PLAN

SCALE: 1" = 50'

D-2

APPROVED FOR DRAINAGE WORK ONLY

CALCULATED-DESIGNED BY	CARL GIBSON III	REVISED BY	J.R.
CHECKED BY		DATE REVISED	02/15/22
CONSULTANT FUNCTIONAL SUPERVISOR	CARL GIBSON III	JESUS RICO	

STATE OF CALIFORNIA - DEPARTMENT OF TRANSPORTATION

Caltrans

X:\SR 37_FAIRGROUNDS DRIVE\000_CAD\Sheets\017-Drainage\1A-Plans\044A4414i002.dgn

LAST REVISION 00-00-00 | DATE PLOTTED => 9/1/2022 | TIME PLOTTED => 12:33:53 AM

BORDER LAST REVISED 7/2/2010 | USERNAME => jvaldivia | DGN FILE => 044A4414i002.dgn | RELATIVE BORDER SCALE IS IN INCHES 0 1 2 3 | UNIT 0738 | PROJECT NUMBER & PHASE 04000205841

Dist	COUNTY	ROUTE	POST MILES TOTAL PROJECT	SHEET No.	TOTAL SHEETS
04	Sol	37	10.9		

REGISTERED CIVIL ENGINEER DATE

PLANS APPROVAL DATE

REGISTERED PROFESSIONAL ENGINEER No. Exp. CIVIL STATE OF CALIFORNIA

THE STATE OF CALIFORNIA OR ITS OFFICERS OR AGENTS SHALL NOT BE RESPONSIBLE FOR THE ACCURACY OR COMPLETENESS OF SCANNED COPIES OF THIS PLAN SHEET.

WMH CORPORATION
11070 WHITE ROCK RD
SUITE 140
RANCHO CORDOVA
CA 95670

SOLANO TRANSPORTATION AUTHORITY
1 HARBOR CENTER
SUITE 130
SUISUN CITY, CA 94585

PRELIMINARY PLANS SUBJECT TO REVISION

NOTES:

1. FOR ACCURATE RIGHT OF WAY DATA, CONTACT RIGHT OF WAY ENGINEERING AT THE DISTRICT OFFICE.
2. FOR CURB CUT OUTLET MODIFICATION SEE DRAINAGE DETAIL SHEET DD-10.

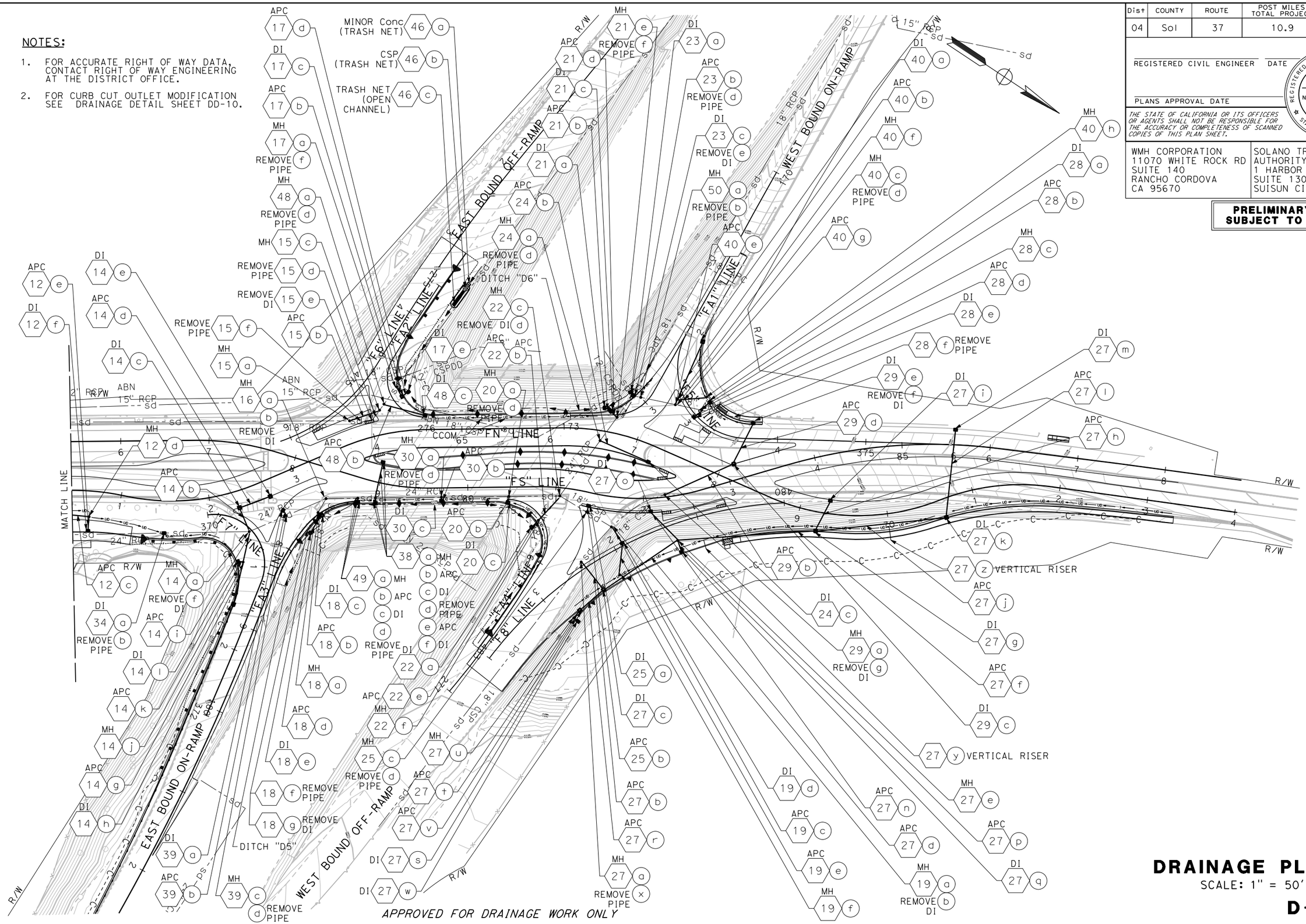

APPROVED FOR DRAINAGE WORK ONLY

DRAINAGE PLAN

SCALE: 1" = 50'

D-3

REVISED BY	DATE REVISED
J.R.	02/15/22

CALCULATED-DESIGNED BY: JESUS RICO
CHECKED BY: CARL GIBSON III
CONSULTANT FUNCTIONAL SUPERVISOR: CARL GIBSON III

STATE OF CALIFORNIA - DEPARTMENT OF TRANSPORTATION

Caltrans

X:\SR 37_FAIRGROUNDS DRIVE\000_CAD\Sheets\017-Drainage\IA-Plans\044A4414ia003.dgn

LAST REVISION 00-00-00
DATE PLOTTED => 9/1/2022
TIME PLOTTED => 12:34:00 AM

BORDER LAST REVISED 7/2/2010 | USERNAME => jvaldivia | DGN FILE => 044A4414ia003.dgn | RELATIVE BORDER SCALE IS IN INCHES 0 1 2 3 | UNIT 0738 | PROJECT NUMBER & PHASE 04000205841

Dist	COUNTY	ROUTE	POST MILES TOTAL PROJECT	SHEET No.	TOTAL SHEETS
04	Sol	37	10.9		

REGISTERED CIVIL ENGINEER DATE

PLANS APPROVAL DATE

REGISTERED PROFESSIONAL ENGINEER No. Exp. CIVIL STATE OF CALIFORNIA

THE STATE OF CALIFORNIA OR ITS OFFICERS OR AGENTS SHALL NOT BE RESPONSIBLE FOR THE ACCURACY OR COMPLETENESS OF SCANNED COPIES OF THIS PLAN SHEET.

WMH CORPORATION
11070 WHITE ROCK RD
SUITE 140
RANCHO CORDOVA
CA 95670

SOLANO TRANSPORATION AUTHORITY
1 HARBOR CENTER
SUITE 130
SUISUN CITY, CA 94585

NOTES:

1. UNLESS NOTED OTHERWISE, STATION AND OFFSET TIES TO DRAINAGE STRUCTURES ARE MEASURED AT TGR PER THE DETAILS ON DRAINAGE DETAILS SHEET DD-1.
2. GRATE ELEVATIONS ARE GIVEN AT FLOW LINE, WHERE INLET DEPRESSIONS ARE CONSTRUCTED. FLOW LINE REPRESENTS DEPRESSION FOR INLET.
3. CONTRACTOR SHALL POSITIVELY DETERMINE ALL HORIZONTAL AND VERTICAL LOCATIONS OF ALL UTILITIES PRIOR TO ORDERING MATERIALS OF ANY COMPONENT OF ANY DRAINAGE SYSTEM.
4. SEE UTILITY SHEETS FOR EXISTING FACILITIES.
5. FOR RSP DIMENSIONS, SEE DRAINAGE DETAILS.
6. "H" CALCULATION AND ELEVATIONS INCLUDES INLET DEPRESSION.
7. FOR CFES AND SFES LENGTHS, SEE DRAINAGE DETAILS.
8. FOR ALL "MODIFY INLET TO MH", CONTRACTOR TO VERIFY SIZE OF EXISTING MANHOLE OR INLET PRIOR TO ORDERING MATERIALS. NEW MH SHALL MATCH SIZE OF EXISTING.
9. ADD MAINTENANCE ACCESS LADDER TO MANHOLE THAT MEETS CAL OSHA REQUIREMENTS.

LEGEND:

CULVERT SLURRY - CEMENT BACKFILL

ROCK SLOPE PROTECTION (SEE DRAINAGE DETAILS)

ABBREVIATIONS:

BFS	BIOFILTRATION SWALE
CC	CURB CUT (SEE DRAINAGE DETAILS)
CFES	CONCRETE FLARED END SECTION
SFES	STEEL FLARED END SECTION
SID	STANDARD INLET DEPRESSION
TCV	TOP OF COVER
TGR	TOP OF GRATE (ACCOUNTS FOR INLET DEPRESSION)

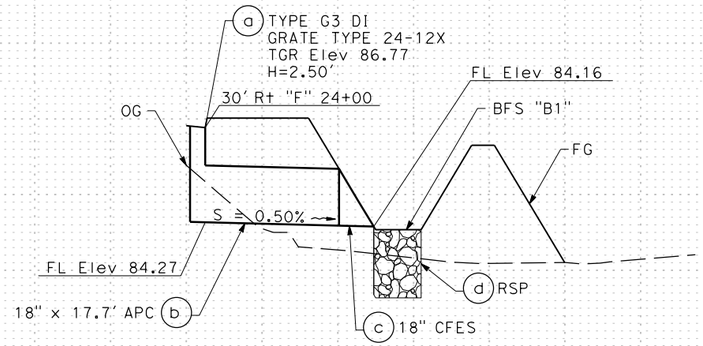

DRAINAGE SYSTEM No. 1

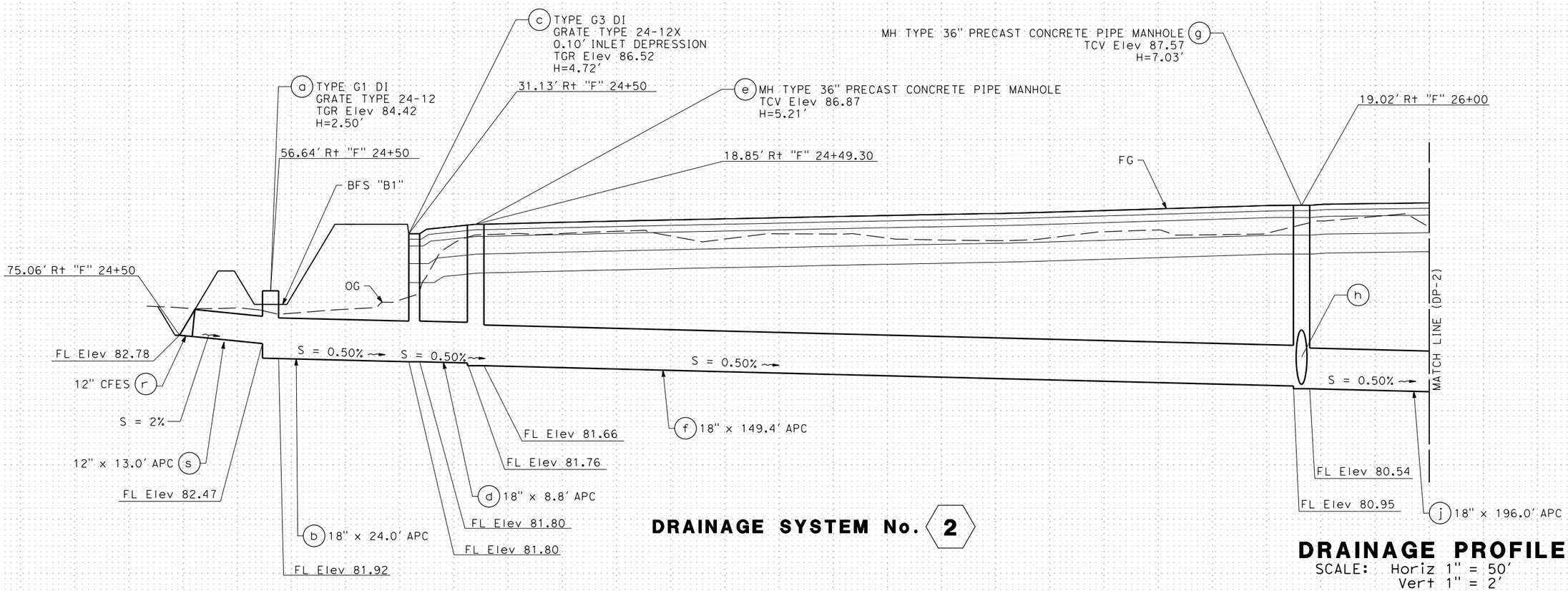

DRAINAGE SYSTEM No. 2

DRAINAGE PROFILE

SCALE: Horiz 1" = 50'
Vert 1" = 2'

DP-1

REVISED BY	DATE REVISED
J.R.	02/15/22

JESUS RICO — CARL GIBSON III

CALCULATED-DESIGNED BY — CHECKED BY

CONSULTANT FUNCTIONAL SUPERVISOR — CARL GIBSON III

STATE OF CALIFORNIA - DEPARTMENT OF TRANSPORTATION

Caltrans

X:\SR 37_FAIRGROUNDS DRIVE\000_CAD\Sheets\017-Drainage\IB-Profiles\044A4414ib001.dgn

LAST REVISION 00-00-00 — DATE PLOTTED => 9/1/2022 — TIME PLOTTED => 12:35:58 AM

Dist	COUNTY	ROUTE	POST MILES TOTAL PROJECT	SHEET No.	TOTAL SHEETS
04	Sol	37	10.9		

REGISTERED CIVIL ENGINEER DATE

PLANS APPROVAL DATE

REGISTERED PROFESSIONAL ENGINEER No. Exp. CIVIL STATE OF CALIFORNIA

THE STATE OF CALIFORNIA OR ITS OFFICERS OR AGENTS SHALL NOT BE RESPONSIBLE FOR THE ACCURACY OR COMPLETENESS OF SCANNED COPIES OF THIS PLAN SHEET.

WMH CORPORATION
11070 WHITE ROCK RD
SUITE 140
RANCHO CORDOVA
CA 95670

SOLANO TRANSPORATION AUTHORITY
1 HARBOR CENTER
SUITE 130
SUISUN CITY, CA 94585

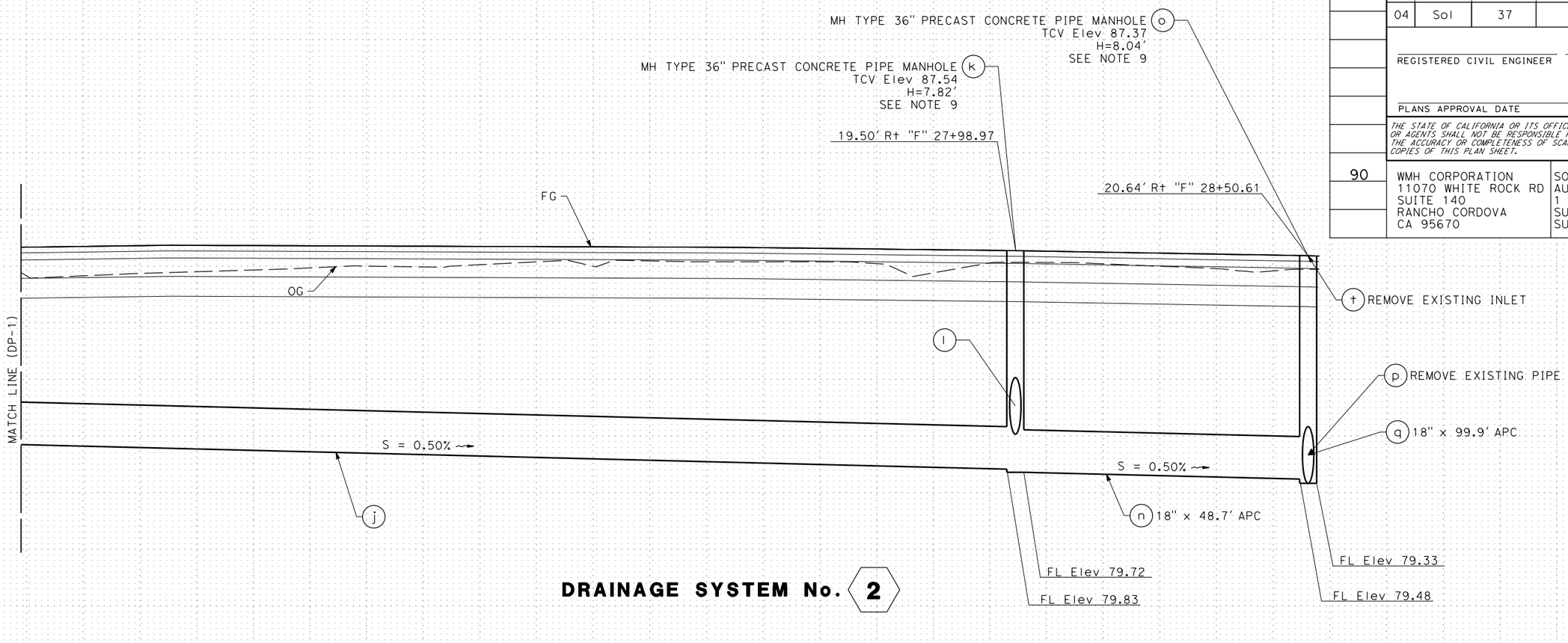

DRAINAGE SYSTEM No. 2

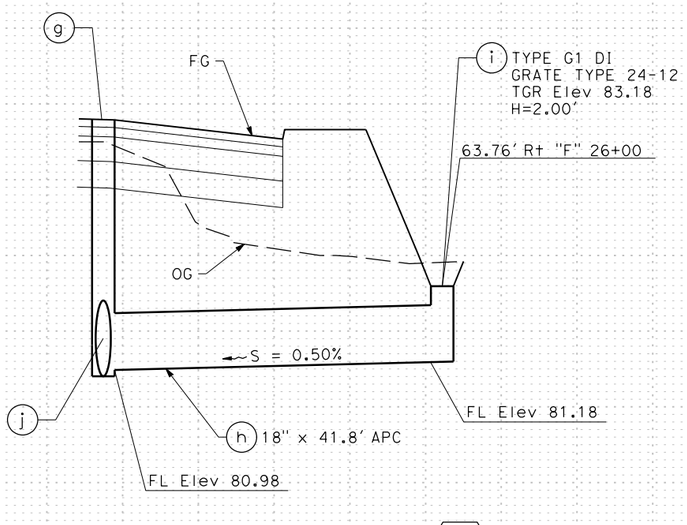

DRAINAGE SYSTEM No. 2

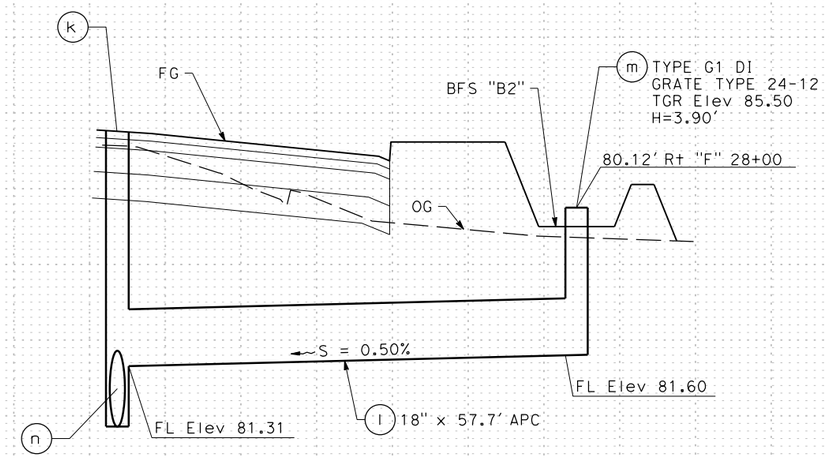

DRAINAGE SYSTEM No. 2

DRAINAGE PROFILE

SCALE: Horiz 1" = 50'
Vert 1" = 2'

DP-2

REVISED BY	DATE REVISED
J.R.	02/15/22

JESUS RICO — CARL GIBSON III — CALCULATED-DESIGNED BY
CHECKED BY — CARL GIBSON III — CONSULTANT FUNCTIONAL SUPERVISOR

STATE OF CALIFORNIA - DEPARTMENT OF TRANSPORTATION

X:\SR 37_FAIRGROUNDS DRIVE\000_CAD\Sheets\017-Drainage\1B-Profiles\044A4414ib002.dgn

LAST REVISION 00-00-00 | DATE PLOTTED => 9/1/2022 | TIME PLOTTED => 12:36:14 AM

Dist	COUNTY	ROUTE	POST MILES TOTAL PROJECT	SHEET No.	TOTAL SHEETS
04	Sol	37	10.9		

REGISTERED CIVIL ENGINEER DATE

PLANS APPROVAL DATE

REGISTERED PROFESSIONAL ENGINEER No. Exp. CIVIL STATE OF CALIFORNIA

THE STATE OF CALIFORNIA OR ITS OFFICERS OR AGENTS SHALL NOT BE RESPONSIBLE FOR THE ACCURACY OR COMPLETENESS OF SCANNED COPIES OF THIS PLAN SHEET.

WMH CORPORATION
11070 WHITE ROCK RD
SUITE 140
RANCHO CORDOVA
CA 95670

SOLANO TRANSPORATION AUTHORITY
1 HARBOR CENTER
SUITE 130
SUISUN CITY, CA 94585

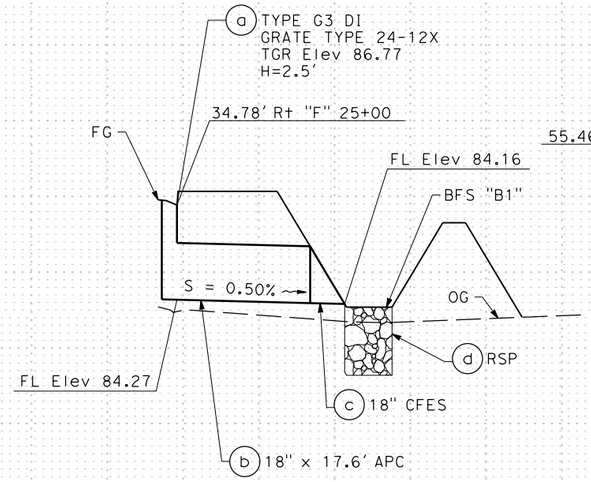

DRAINAGE SYSTEM No. 3

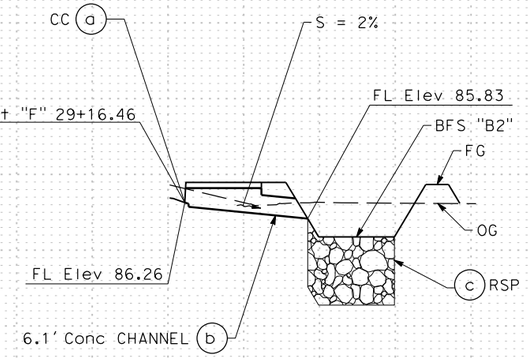

DRAINAGE SYSTEM No. 4

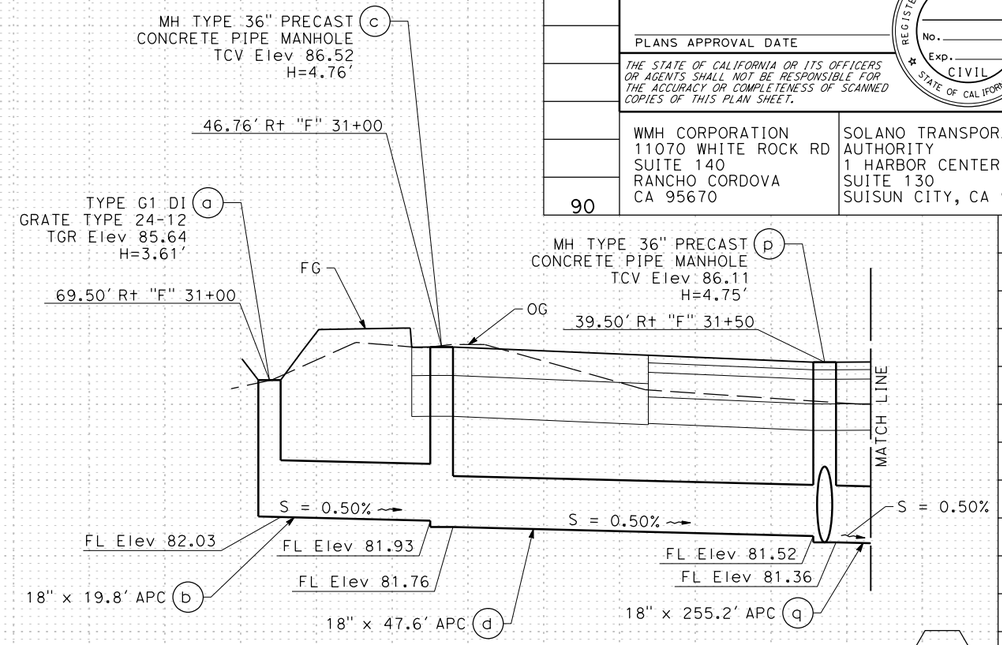

DRAINAGE SYSTEM No. 5

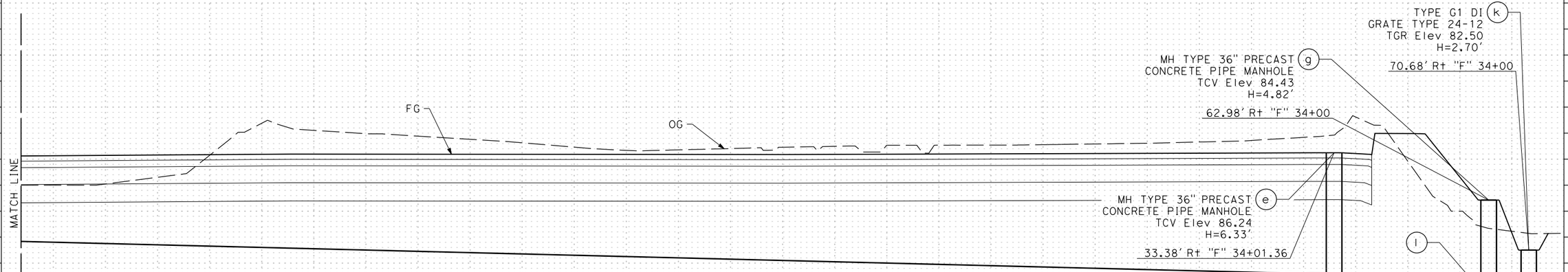

DRAINAGE SYSTEM No. 5

DRAINAGE PROFILE

SCALE: Horiz 1" = 50'
Vert 1" = 2'

DP-3

REVISED BY	DATE REVISED
J.R.	02/15/22

JESUS RICO — CARL GIBSON III

CALCULATED-DESIGNED BY — CHECKED BY

CONSULTANT FUNCTIONAL SUPERVISOR — CARL GIBSON III

STATE OF CALIFORNIA - DEPARTMENT OF TRANSPORTATION

Caltrans

X:\SR 37_FAIRGROUNDS DRIVE\000_CAD\Sheets\017-Drainage\IB-Profiles\044A4414ib003.dgn

LAST REVISION 00-00-00 | DATE PLOTTED => 9/1/2022 TIME PLOTTED => 12:36:25 AM

Dist	COUNTY	ROUTE	POST MILES TOTAL PROJECT	SHEET No.	TOTAL SHEETS
04	Sol	37	10.9		

REGISTERED CIVIL ENGINEER DATE

PLANS APPROVAL DATE

REGISTERED PROFESSIONAL ENGINEER No. Exp. CIVIL STATE OF CALIFORNIA

THE STATE OF CALIFORNIA OR ITS OFFICERS OR AGENTS SHALL NOT BE RESPONSIBLE FOR THE ACCURACY OR COMPLETENESS OF SCANNED COPIES OF THIS PLAN SHEET.

WMH CORPORATION
11070 WHITE ROCK RD
SUITE 140
RANCHO CORDOVA
CA 95670

SOLANO TRANSPORATION AUTHORITY
1 HARBOR CENTER
SUITE 130
SUISUN CITY, CA 94585

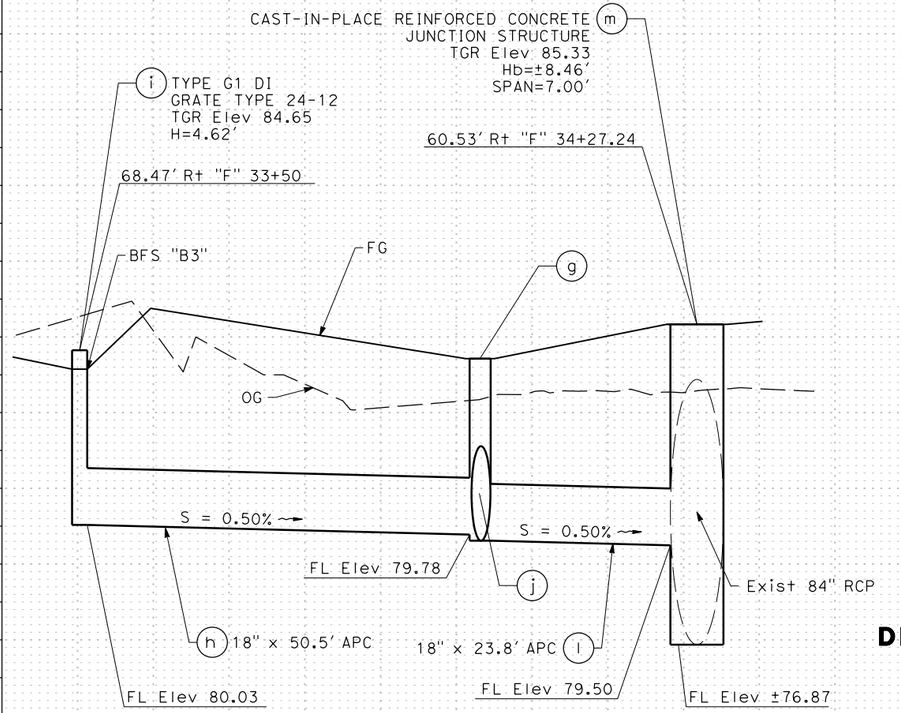

DRAINAGE SYSTEM No. 5

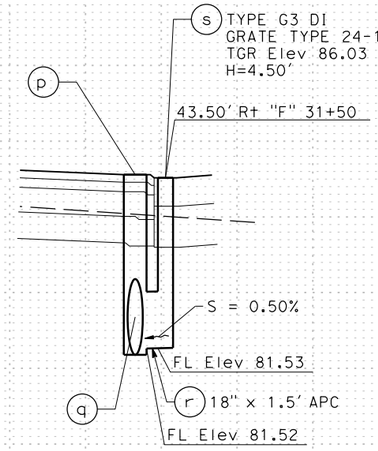

DRAINAGE SYSTEM No. 5

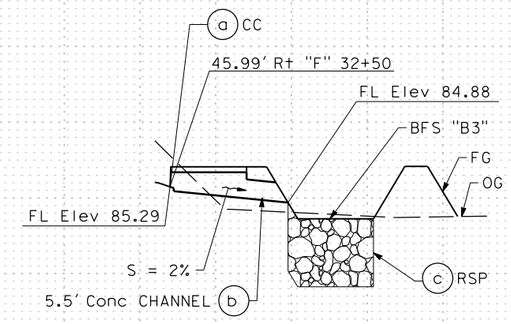

DRAINAGE SYSTEM No. 6

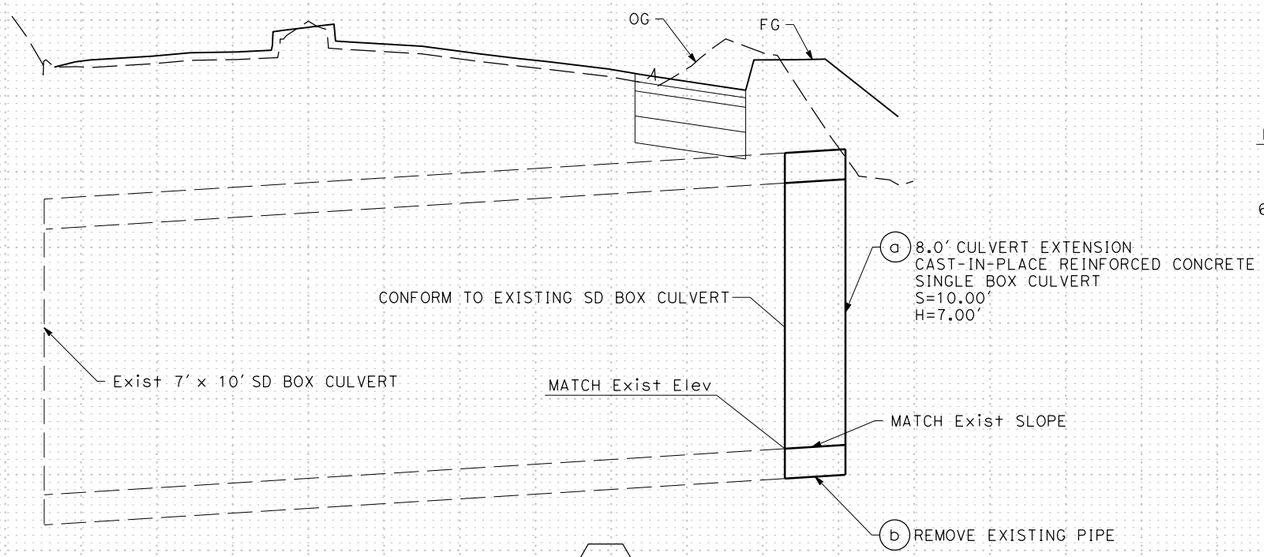

DRAINAGE SYSTEM No. 7

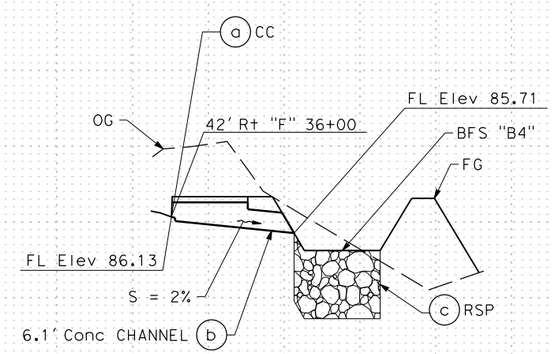

DRAINAGE SYSTEM No. 8

DRAINAGE PROFILE

SCALE: Horiz 1" = 50'
Vert 1" = 2'

DP-4

REVISED BY	DATE REVISED
J.R.	02/15/22

CALCULATED-DESIGNED BY	CHECKED BY
JESUS RICO	CARL GIBSON III

CONSULTANT FUNCTIONAL SUPERVISOR: CARL GIBSON III

STATE OF CALIFORNIA - DEPARTMENT OF TRANSPORTATION

Caltrans

X:\SR 37_FAIRGROUNDS DRIVE\000_CAD\Sheets\017-Drainage\IB-Profiles\044A4414ib004.dgn

LAST REVISION 00-00-00 | DATE PLOTTED => 9/1/2022 | TIME PLOTTED => 12:36:34 AM

Dist	COUNTY	ROUTE	POST MILES TOTAL PROJECT	SHEET No.	TOTAL SHEETS
04	Sol	37	10.9		

REGISTERED CIVIL ENGINEER DATE

PLANS APPROVAL DATE

REGISTERED PROFESSIONAL ENGINEER No. Exp. CIVIL STATE OF CALIFORNIA

THE STATE OF CALIFORNIA OR ITS OFFICERS OR AGENTS SHALL NOT BE RESPONSIBLE FOR THE ACCURACY OR COMPLETENESS OF SCANNED COPIES OF THIS PLAN SHEET.

WMH CORPORATION
11070 WHITE ROCK RD
SUITE 140
RANCHO CORDOVA
CA 95670

SOLANO TRANSPORATION AUTHORITY
1 HARBOR CENTER
SUITE 130
SUISUN CITY, CA 94585

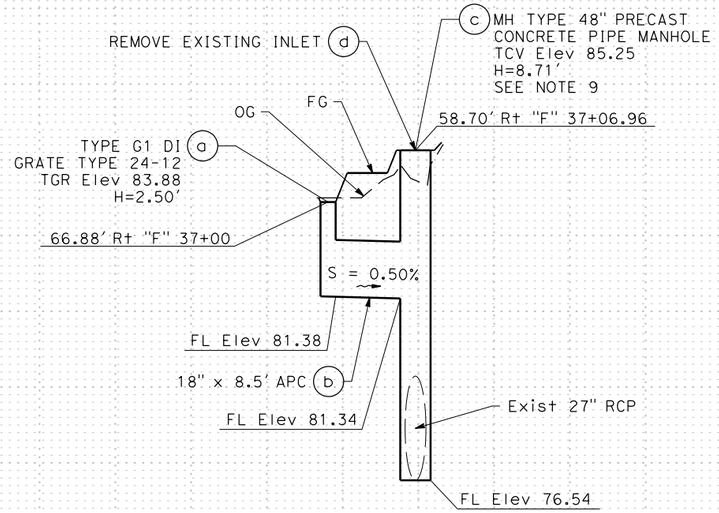

DRAINAGE SYSTEM No. 9

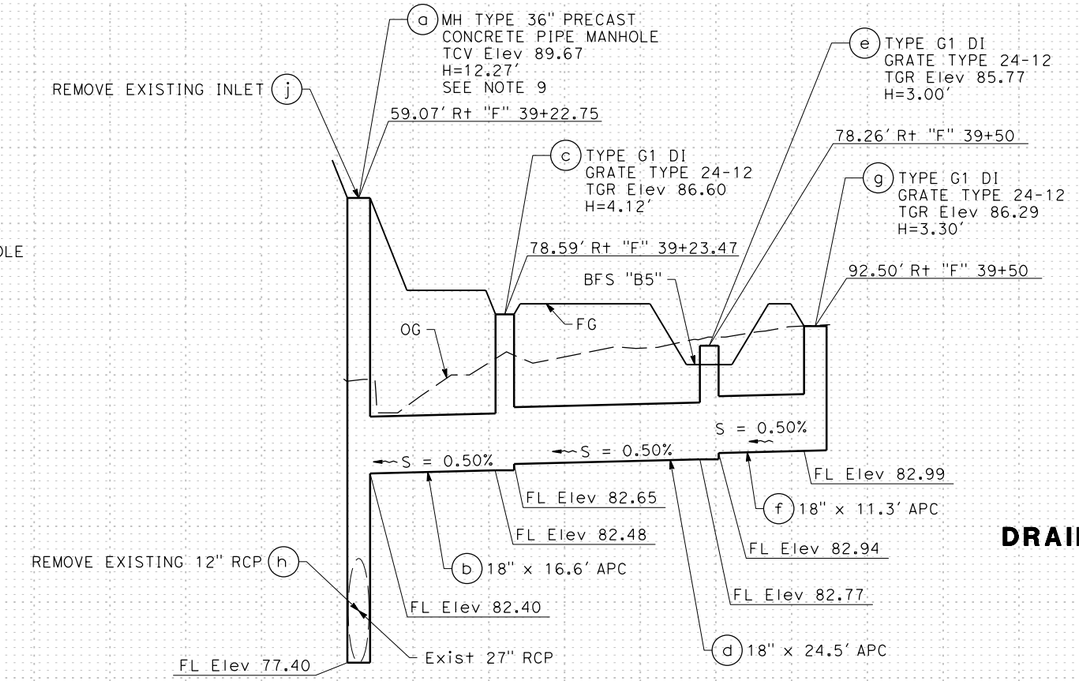

DRAINAGE SYSTEM No. 10

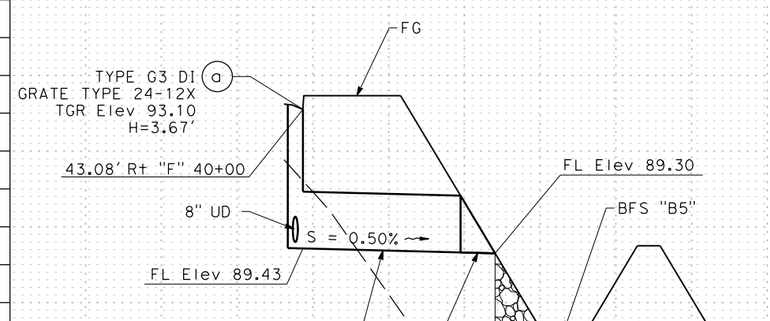

DRAINAGE SYSTEM No. 11

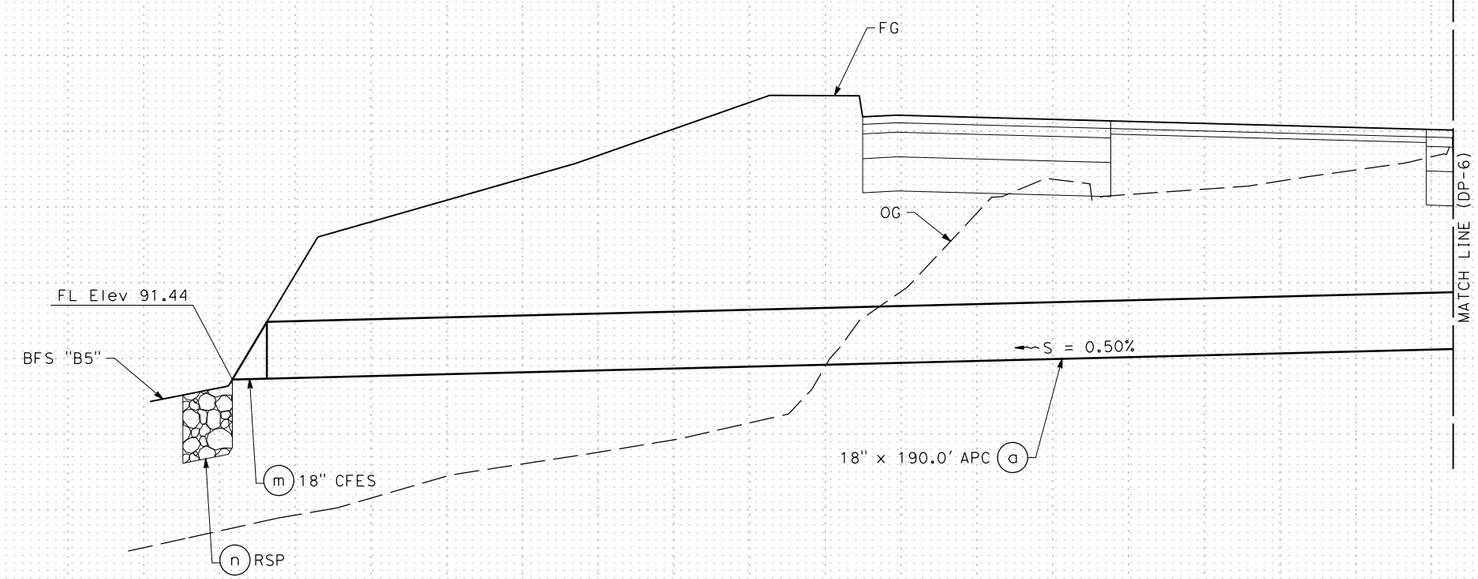

DRAINAGE SYSTEM No. 12

Exist 24" RCP

DRAINAGE PROFILE

SCALE: Horiz 1" = 50'
Vert 1" = 2'

DP-5

REVISED BY	J.R.
DATE REVISED	02/15/22
JESUS RICO	CARL GIBSON III
CALCULATED-DESIGNED BY	CHECKED BY
CONSULTANT FUNCTIONAL SUPERVISOR	CARL GIBSON III

STATE OF CALIFORNIA - DEPARTMENT OF TRANSPORTATION

X:\SR 37_FAIRGROUNDS DRIVE\000_CAD\Sheets\017-Drainage\IB-Profiles\044A4414ib005.dgn

LAST REVISION 00-00-00 | DATE PLOTTED => 9/1/2022 | TIME PLOTTED => 12:37:02 AM

BORDER LAST REVISED 7/2/2010 | USERNAME => jvaldivia | DGN FILE => 044A4414ib005.dgn | RELATIVE BORDER SCALE IS IN INCHES 0 1 2 3 | UNIT 0738 | PROJECT NUMBER & PHASE 04000205841

Dist	COUNTY	ROUTE	POST MILES TOTAL PROJECT	SHEET No.	TOTAL SHEETS
04	Sol	37	10.9		

REGISTERED CIVIL ENGINEER DATE

PLANS APPROVAL DATE

REGISTERED PROFESSIONAL ENGINEER No. Exp. CIVIL STATE OF CALIFORNIA

THE STATE OF CALIFORNIA OR ITS OFFICERS OR AGENTS SHALL NOT BE RESPONSIBLE FOR THE ACCURACY OR COMPLETENESS OF SCANNED COPIES OF THIS PLAN SHEET.

WMH CORPORATION
11070 WHITE ROCK RD
SUITE 140
RANCHO CORDOVA
CA 95670

SOLANO TRANSPORATION AUTHORITY
1 HARBOR CENTER
SUITE 130
SUISUN CITY, CA 94585

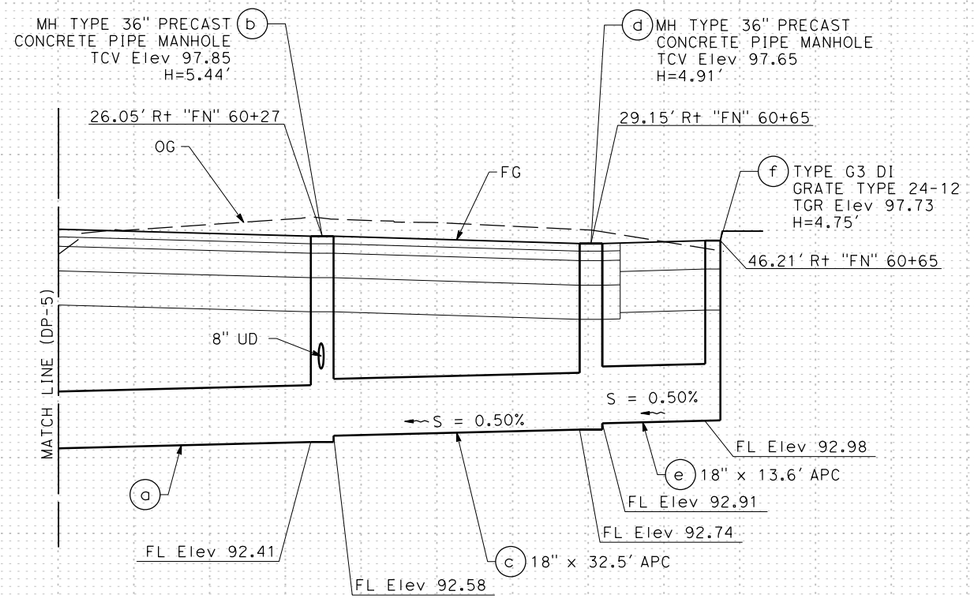

DRAINAGE SYSTEM No. 12

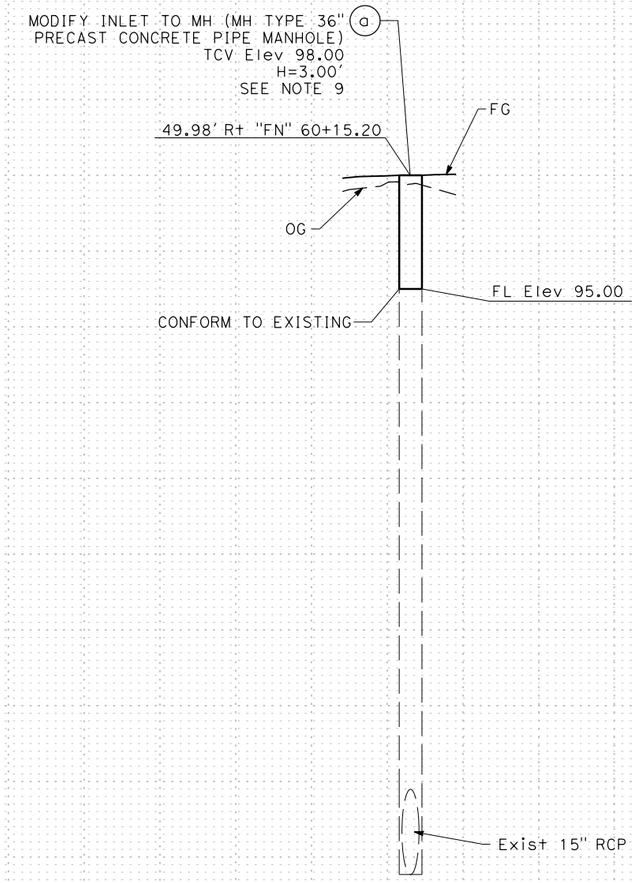

DRAINAGE SYSTEM No. 13

DRAINAGE PROFILE

SCALE: Horiz 1" = 50'
Vert 1" = 2'

DP-6

REVISED BY	DATE REVISED
J.R.	02/15/22

JESUS RICO — CARL GIBSON III — CALCULATED-DESIGNED BY — CHECKED BY — CARL GIBSON III — CONSULTANT FUNCTIONAL SUPERVISOR

STATE OF CALIFORNIA - DEPARTMENT OF TRANSPORTATION

Caltrans

X:\SR 37_FAIRGROUNDS DRIVE\000_CAD\Sheets\017-Drainage\IB-Profiles\044A4414ib006.dgn

LAST REVISION 00-00-00 DATE PLOTTED => 9/1/2022 TIME PLOTTED => 12:37:12 AM

BORDER LAST REVISED 7/2/2010 | USERNAME => jvaldivia DGN FILE => 044A4414ib006.dgn | RELATIVE BORDER SCALE IS IN INCHES 0 1 2 3 | UNIT 0738 | PROJECT NUMBER & PHASE 04000205841

Dist	COUNTY	ROUTE	POST MILES TOTAL PROJECT	SHEET No.	TOTAL SHEETS
04	Sol	37	10.9		

REGISTERED CIVIL ENGINEER DATE

PLANS APPROVAL DATE

REGISTERED PROFESSIONAL ENGINEER No. Exp. CIVIL STATE OF CALIFORNIA

THE STATE OF CALIFORNIA OR ITS OFFICERS OR AGENTS SHALL NOT BE RESPONSIBLE FOR THE ACCURACY OR COMPLETENESS OF SCANNED COPIES OF THIS PLAN SHEET.

WMH CORPORATION
11070 WHITE ROCK RD
SUITE 140
RANCHO CORDOVA
CA 95670

SOLANO TRANSPORATION AUTHORITY
1 HARBOR CENTER
SUITE 130
SUISUN CITY, CA 94585

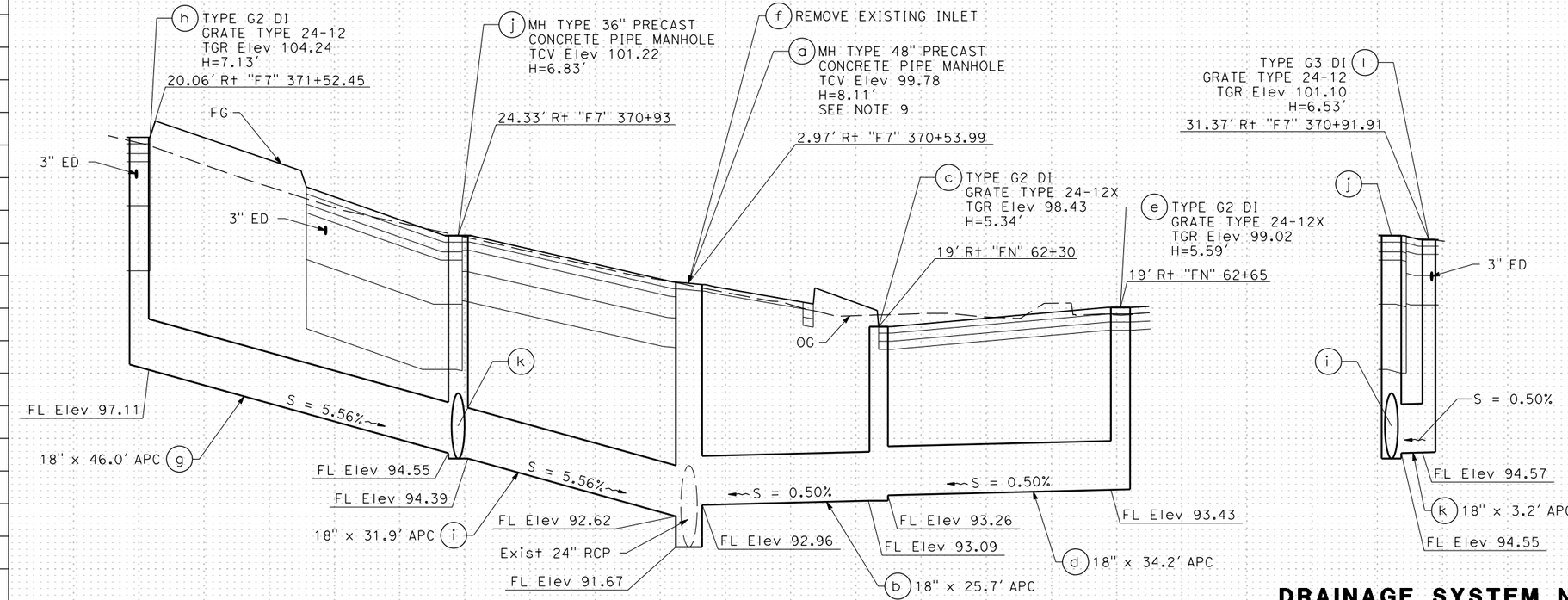

DRAINAGE SYSTEM No. 14

DRAINAGE SYSTEM No. 14

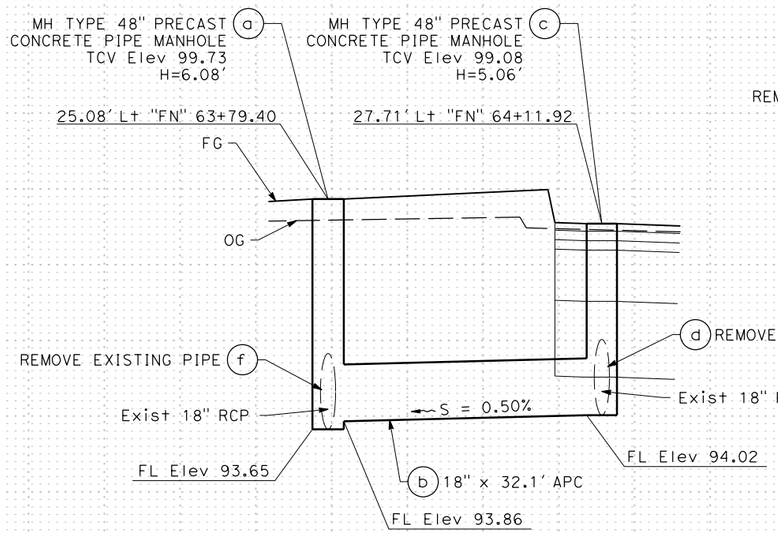

DRAINAGE SYSTEM No. 15

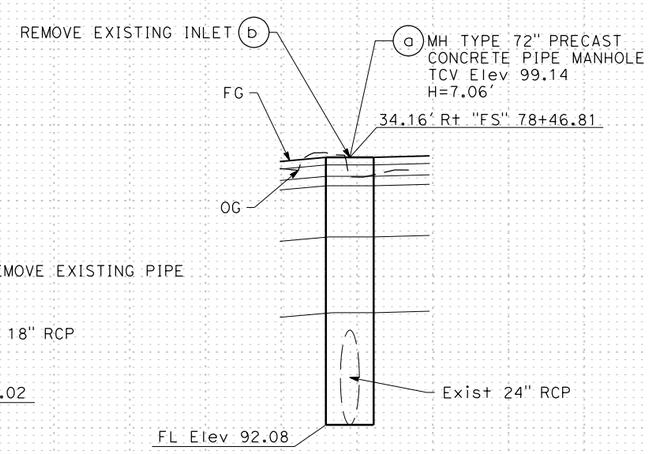

DRAINAGE SYSTEM No. 16

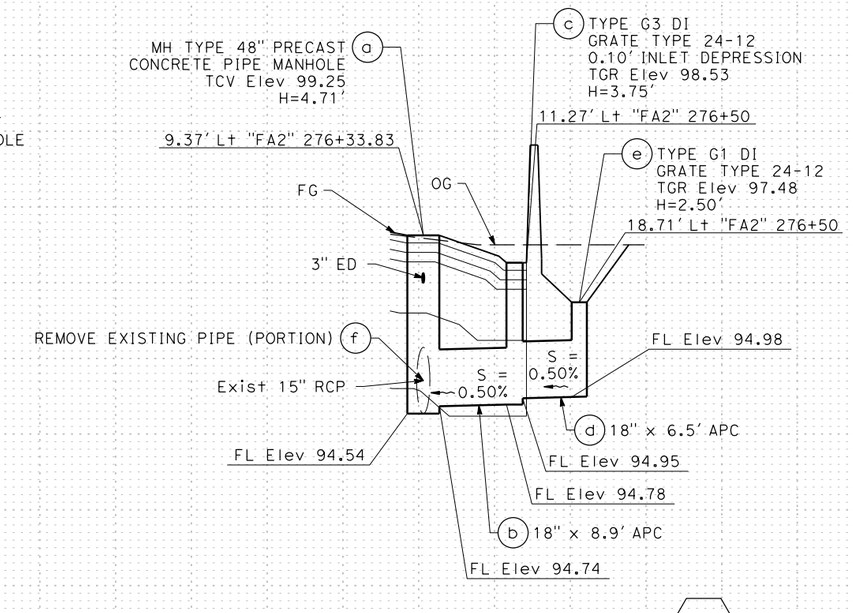

DRAINAGE SYSTEM No. 17

DRAINAGE PROFILE

SCALE: Horiz 1" = 50'
Vert 1" = 2'

DP-7

JESUS RICO	CARL GIBSON III	J.R.	02/15/22
CALCULATED-DESIGNED BY	CHECKED BY	REVISED BY	DATE REVISED
CARL GIBSON III			
CONSULTANT FUNCTIONAL SUPERVISOR			

STATE OF CALIFORNIA - DEPARTMENT OF TRANSPORTATION

Caltrans

X:\SR 37_FAIRGROUNDS DRIVE\000_CAD\Sheets\017-Drainage\IB-Profiles\044A4414ib007.dgn

LAST REVISION 00-00-00 | DATE PLOTTED => 9/1/2022 | TIME PLOTTED => 12:37:31 AM

Dist	COUNTY	ROUTE	POST MILES TOTAL PROJECT	SHEET No.	TOTAL SHEETS
04	Sol	37	10.9		

REGISTERED CIVIL ENGINEER DATE

PLANS APPROVAL DATE

REGISTERED PROFESSIONAL ENGINEER No. Exp. CIVIL STATE OF CALIFORNIA

THE STATE OF CALIFORNIA OR ITS OFFICERS OR AGENTS SHALL NOT BE RESPONSIBLE FOR THE ACCURACY OR COMPLETENESS OF SCANNED COPIES OF THIS PLAN SHEET.

WMH CORPORATION
11070 WHITE ROCK RD
SUITE 140
RANCHO CORDOVA
CA 95670

SOLANO TRANSPORATION AUTHORITY
1 HARBOR CENTER
SUITE 130
SUISUN CITY, CA 94585

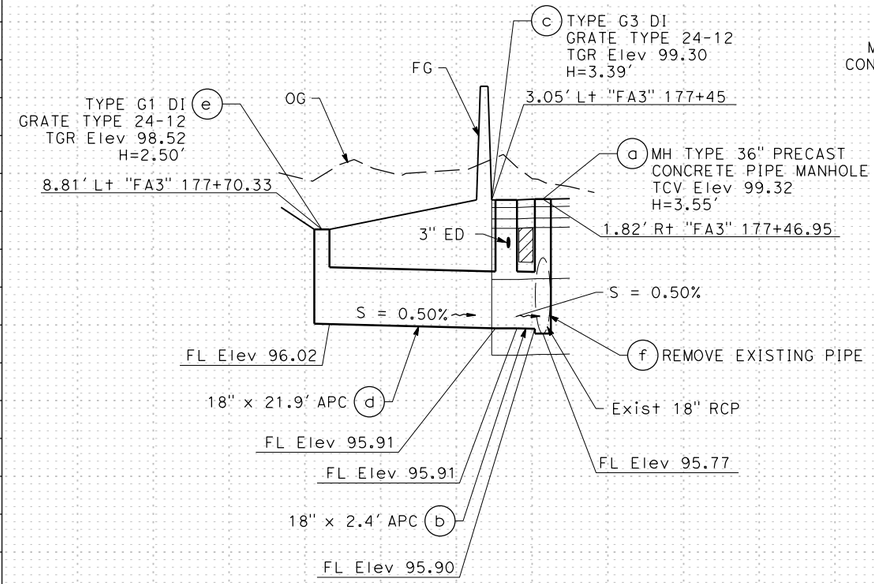

DRAINAGE SYSTEM No. 18

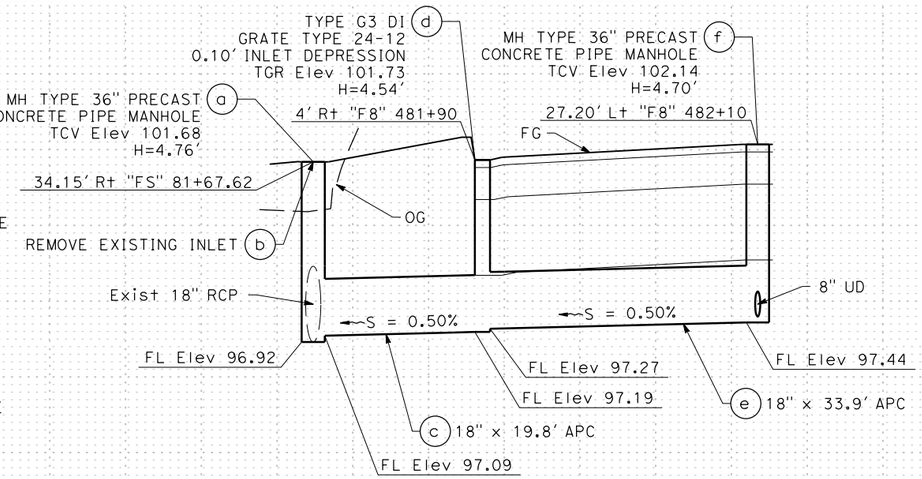

DRAINAGE SYSTEM No. 19

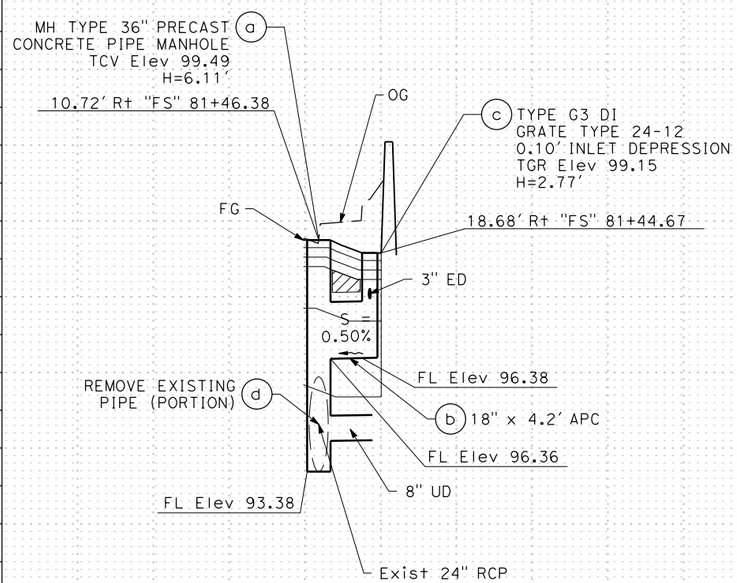

DRAINAGE SYSTEM No. 20

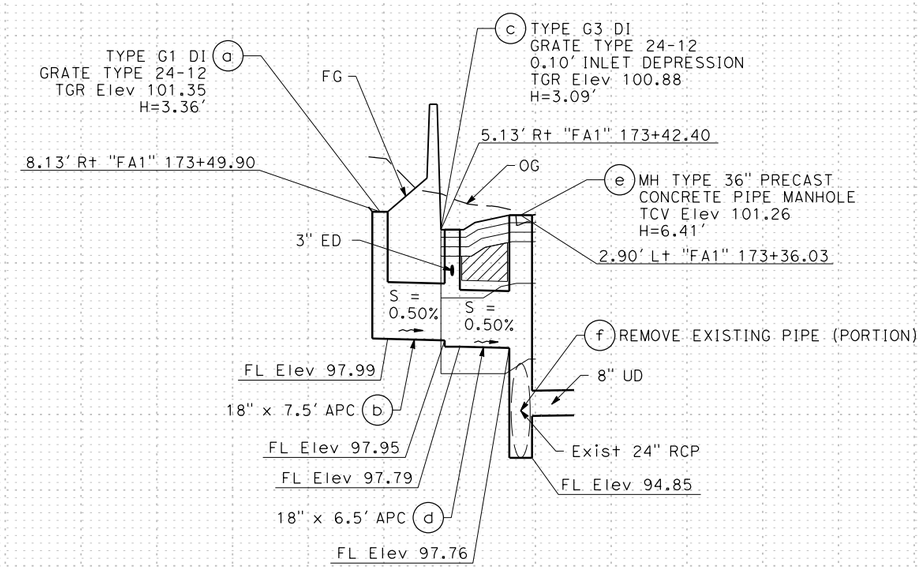

DRAINAGE SYSTEM No. 21

DRAINAGE PROFILE

SCALE: Horiz 1" = 50'
Vert 1" = 2'

DP-8

REVISED BY	DATE REVISED
J.R.	02/15/22

JESUS RICO — CARL GIBSON III — CALCULATED-DESIGNED BY
CHECKED BY
CARL GIBSON III — CONSULTANT FUNCTIONAL SUPERVISOR

STATE OF CALIFORNIA - DEPARTMENT OF TRANSPORTATION

X:\SR 37_FAIRGROUNDS DRIVE\000_CAD\Sheets\017-Drainage\18-Profiles\044A4414ib008.dgn

LAST REVISION 00-00-00 | DATE PLOTTED => 9/1/2022 | TIME PLOTTED => 12:37:39 AM

Dist	COUNTY	ROUTE	POST MILES TOTAL PROJECT	SHEET No.	TOTAL SHEETS
04	Sol	37	10.9		

REGISTERED CIVIL ENGINEER DATE

PLANS APPROVAL DATE

REGISTERED PROFESSIONAL ENGINEER No. Exp. CIVIL STATE OF CALIFORNIA

THE STATE OF CALIFORNIA OR ITS OFFICERS OR AGENTS SHALL NOT BE RESPONSIBLE FOR THE ACCURACY OR COMPLETENESS OF SCANNED COPIES OF THIS PLAN SHEET.

WMH CORPORATION
11070 WHITE ROCK RD
SUITE 140
RANCHO CORDOVA
CA 95670

SOLANO TRANSPORATION AUTHORITY
1 HARBOR CENTER
SUITE 130
SUISUN CITY, CA 94585

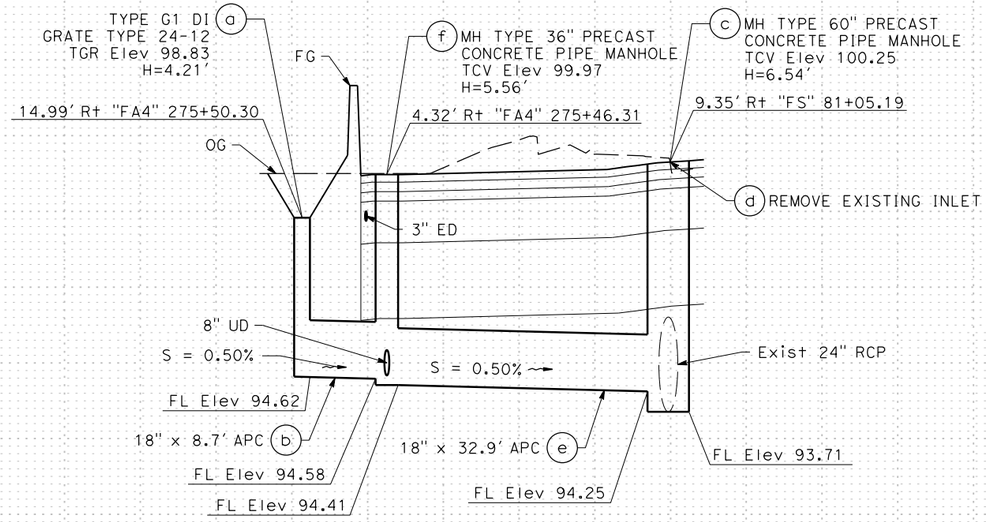

DRAINAGE SYSTEM No. 22

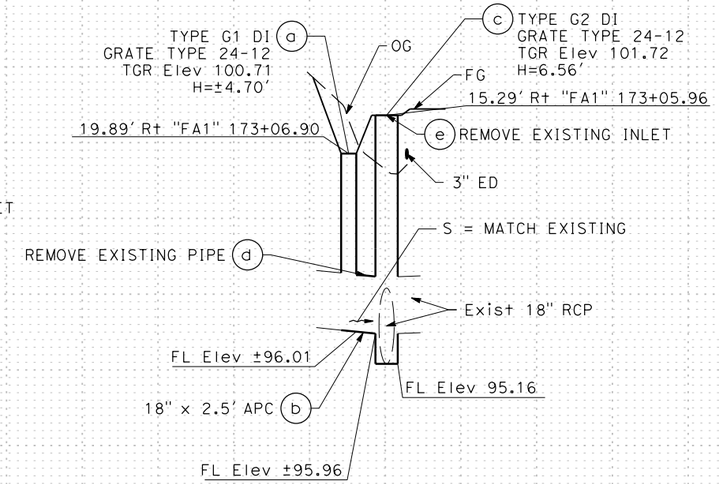

DRAINAGE SYSTEM No. 23

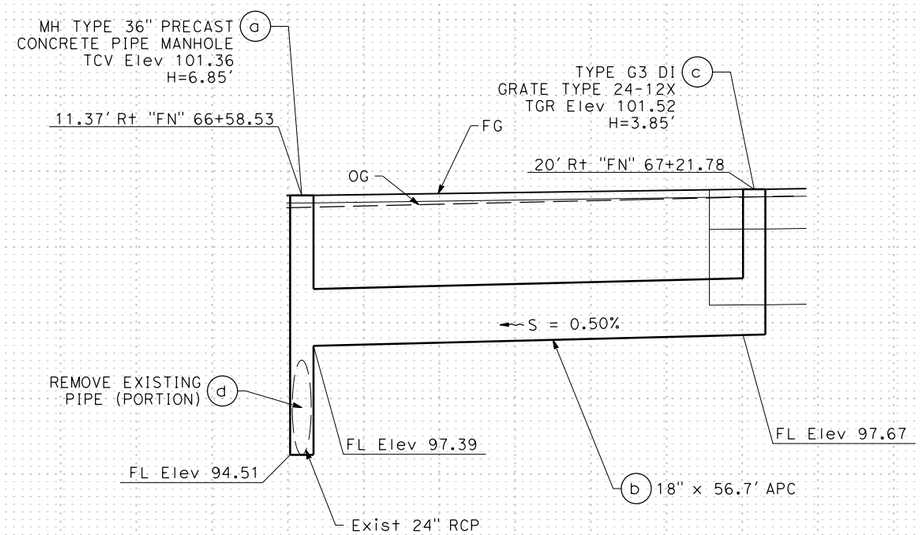

DRAINAGE SYSTEM No. 24

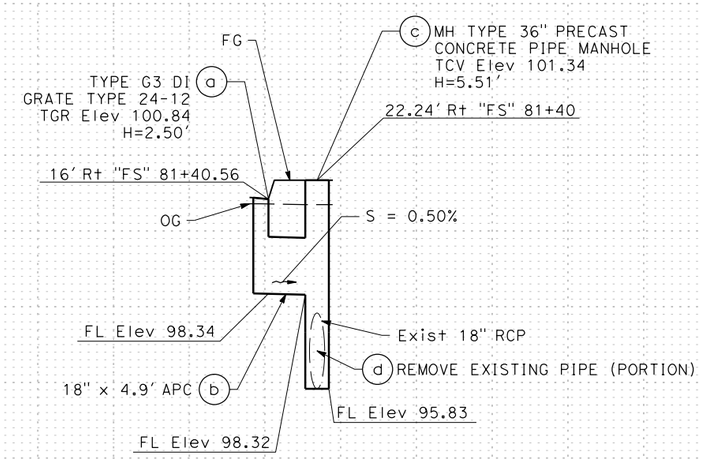

DRAINAGE SYSTEM No. 25

DRAINAGE PROFILE

SCALE: Horiz 1" = 50'
Vert 1" = 2'

DP-9

REVISED BY	DATE REVISED
J.R.	02/15/22

JESUS RICO — CALCULATED-DESIGNED BY
CARL GIBSON III — CHECKED BY
CARL GIBSON III — CONSULTANT FUNCTIONAL SUPERVISOR

STATE OF CALIFORNIA - DEPARTMENT OF TRANSPORTATION
Caltrans

X:\SR 37_FAIRGROUNDS DRIVE\000_CAD\Sheets\017-Drainage\IB-Profiles\044A4414ib009.dgn

LAST REVISION 00-00-00 | DATE PLOTTED => 9/1/2022 | TIME PLOTTED => 12:37:52 AM

Dist	COUNTY	ROUTE	POST MILES TOTAL PROJECT	SHEET No.	TOTAL SHEETS
04	Sol	37	10.9		

REGISTERED CIVIL ENGINEER DATE

PLANS APPROVAL DATE

REGISTERED PROFESSIONAL ENGINEER No. Exp. CIVIL STATE OF CALIFORNIA

THE STATE OF CALIFORNIA OR ITS OFFICERS OR AGENTS SHALL NOT BE RESPONSIBLE FOR THE ACCURACY OR COMPLETENESS OF SCANNED COPIES OF THIS PLAN SHEET.

WMH CORPORATION
11070 WHITE ROCK RD
SUITE 140
RANCHO CORDOVA
CA 95670

SOLANO TRANSPORATION AUTHORITY
1 HARBOR CENTER
SUITE 130
SUISUN CITY, CA 94585

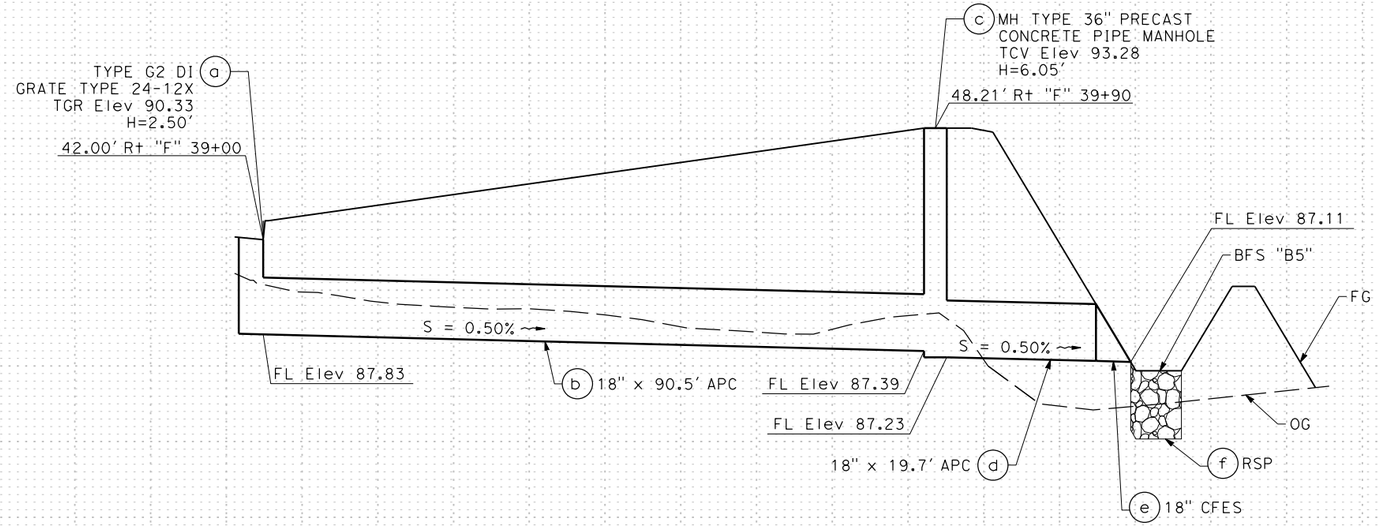

Exist 27" RCP

DRAINAGE SYSTEM No. 26

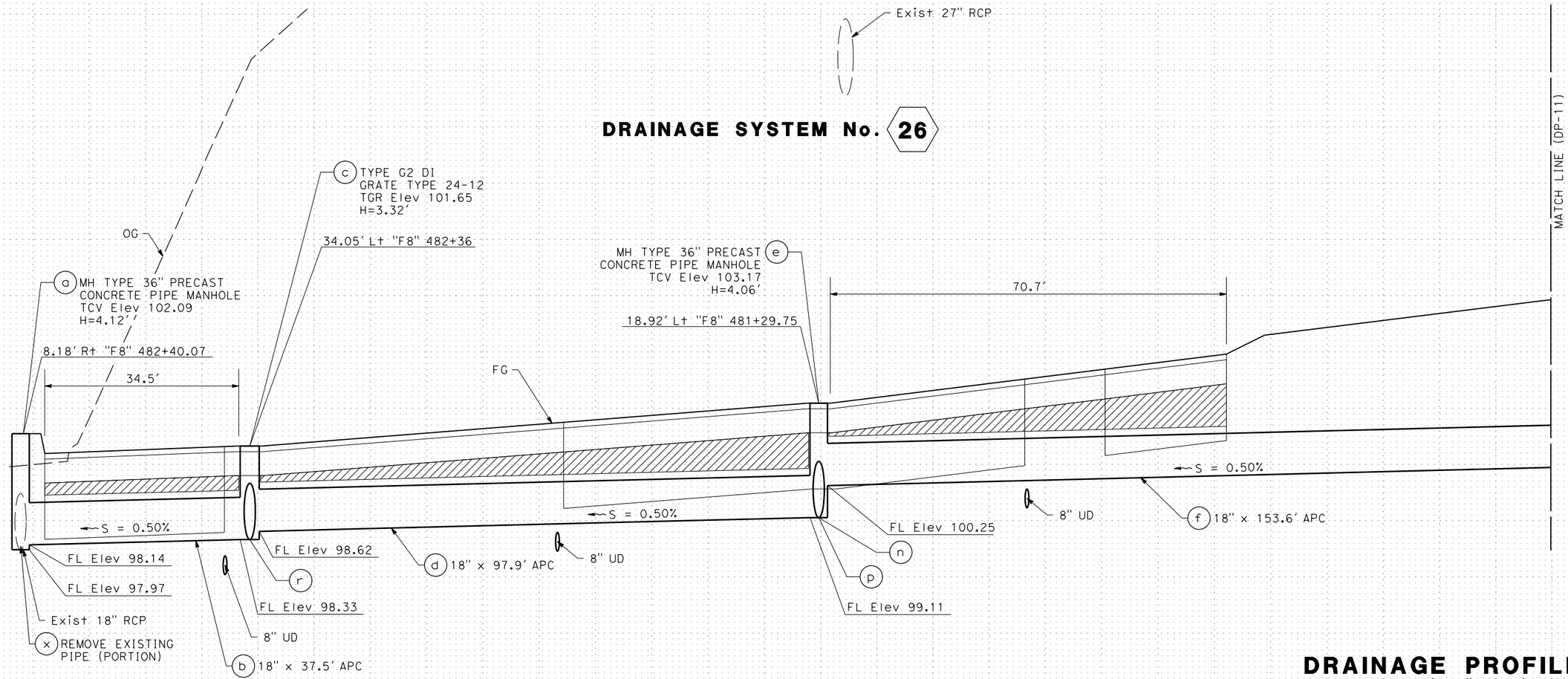

DRAINAGE SYSTEM No. 27

DRAINAGE PROFILE

SCALE: Horiz 1" = 50'
Vert 1" = 2'

DP-10

REVISED BY	DATE REVISED
J.R.	02/15/22

JESUS RICO — CARL GIBSON III — CALCULATED-DESIGNED BY — CHECKED BY

CARL GIBSON III — CONSULTANT FUNCTIONAL SUPERVISOR

STATE OF CALIFORNIA - DEPARTMENT OF TRANSPORTATION — Caltrans

X:\SR 37_FAIRGROUNDS DRIVE\000_CAD\Sheets\017-Drainage\1B-Profiles\044A4414ib010.dgn

LAST REVISION 00-00-00 | DATE PLOTTED => 9/1/2022 | TIME PLOTTED => 12:38:05 AM

Dist	COUNTY	ROUTE	POST MILES TOTAL PROJECT	SHEET No.	TOTAL SHEETS
04	Sol	37	10.9		

REGISTERED CIVIL ENGINEER DATE

PLANS APPROVAL DATE

REGISTERED PROFESSIONAL ENGINEER No. Exp. CIVIL STATE OF CALIFORNIA

THE STATE OF CALIFORNIA OR ITS OFFICERS OR AGENTS SHALL NOT BE RESPONSIBLE FOR THE ACCURACY OR COMPLETENESS OF SCANNED COPIES OF THIS PLAN SHEET.

WMH CORPORATION
11070 WHITE ROCK RD
SUITE 140
RANCHO CORDOVA
CA 95670

SOLANO TRANSPORATION AUTHORITY
1 HARBOR CENTER
SUITE 130
SUISUN CITY, CA 94585

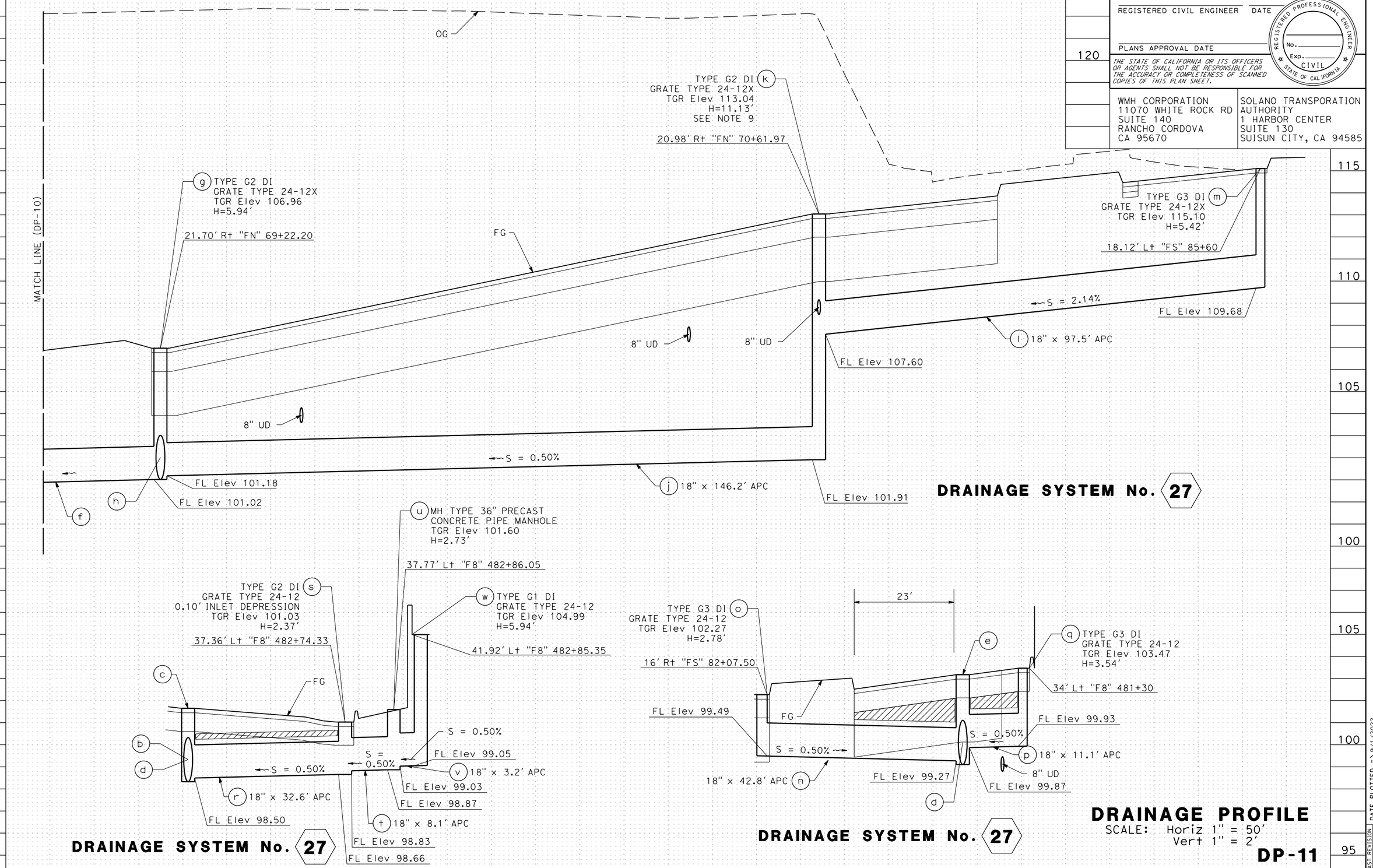

J.R.	02/15/22	REVISED BY	DATE REVISED
JESUS RICO	CARL GIBSON III	CALCULATED-DESIGNED BY	CHECKED BY
CARL GIBSON III		CONSULTANT FUNCTIONAL SUPERVISOR	

STATE OF CALIFORNIA - DEPARTMENT OF TRANSPORTATION

Caltrans

X:\SR 37_FAIRGROUNDS DRIVE\000_CAD\Sheets\017-Drainage\IB-Profiles\044A4414ib011.dgn

LAST REVISION 00-00-00 DATE PLOTTED => 9/1/2022 TIME PLOTTED => 12:38:12 AM

Dist	COUNTY	ROUTE	POST MILES TOTAL PROJECT	SHEET No.	TOTAL SHEETS
04	Sol	37	10.9		

REGISTERED CIVIL ENGINEER DATE

PLANS APPROVAL DATE

REGISTERED PROFESSIONAL ENGINEER No. Exp. CIVIL STATE OF CALIFORNIA

THE STATE OF CALIFORNIA OR ITS OFFICERS OR AGENTS SHALL NOT BE RESPONSIBLE FOR THE ACCURACY OR COMPLETENESS OF SCANNED COPIES OF THIS PLAN SHEET.

WMH CORPORATION
11070 WHITE ROCK RD
SUITE 140
RANCHO CORDOVA
CA 95670

SOLANO TRANSPORATION AUTHORITY
1 HARBOR CENTER
SUITE 130
SUISUN CITY, CA 94585

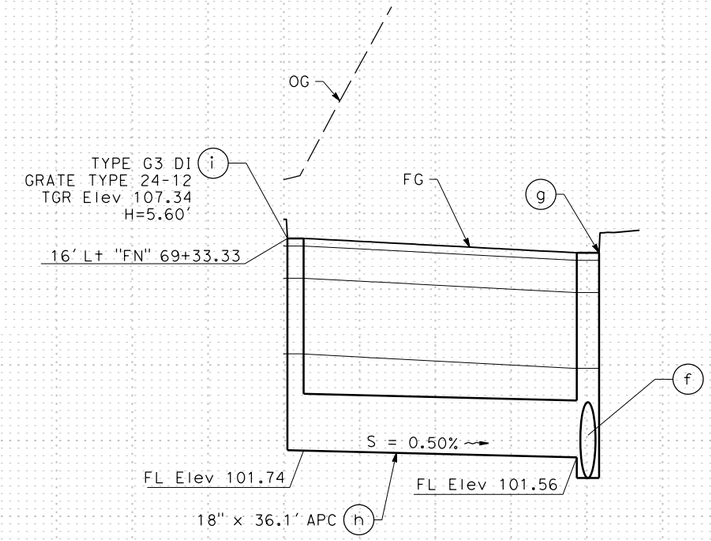

DRAINAGE SYSTEM No. 27

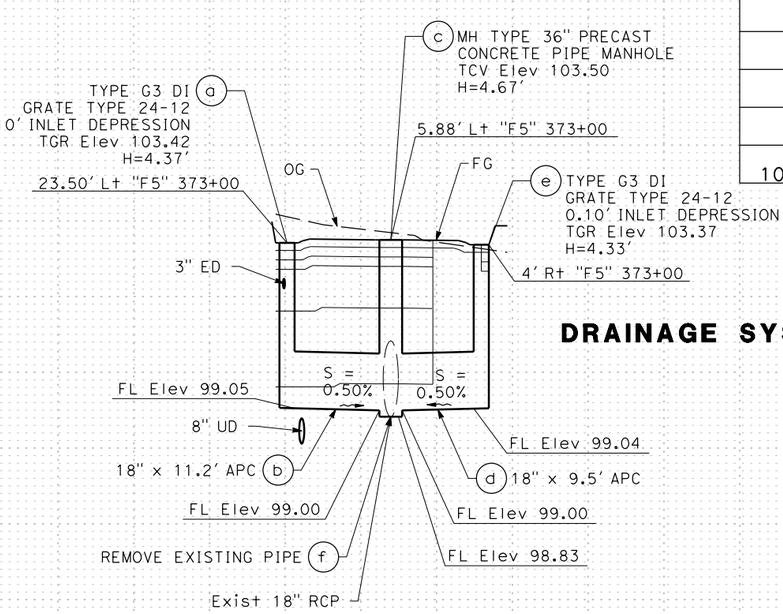

DRAINAGE SYSTEM No. 28

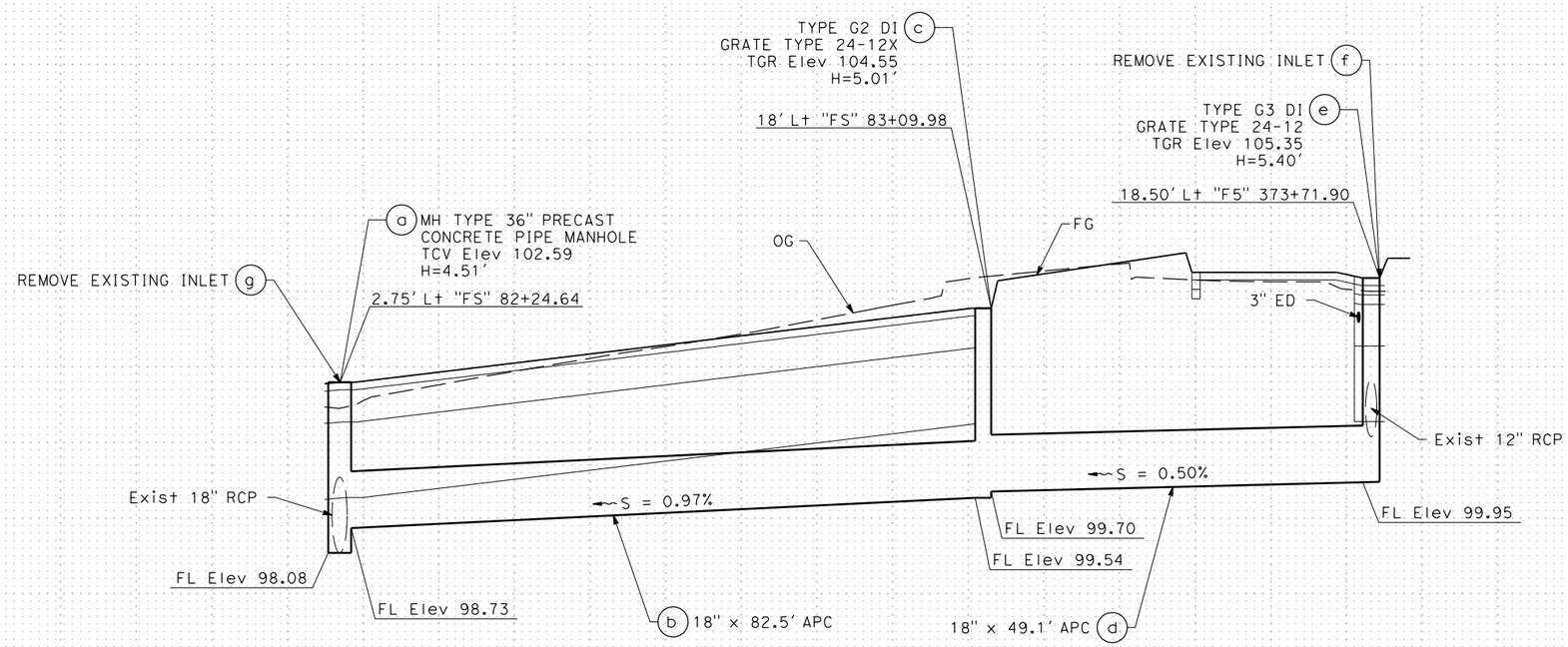

DRAINAGE SYSTEM No. 29

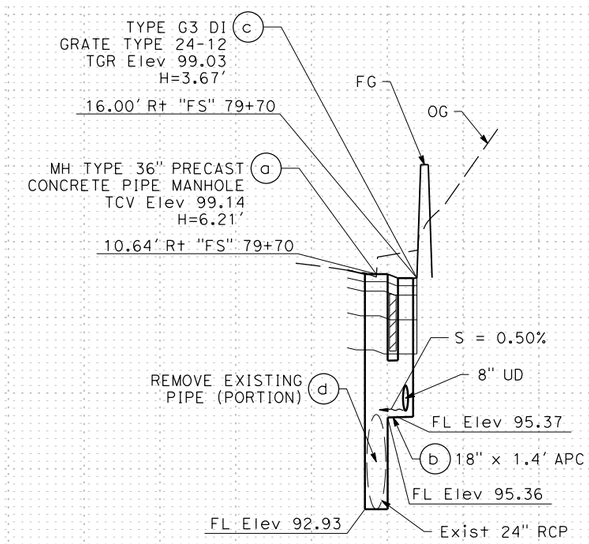

DRAINAGE SYSTEM No. 30

DRAINAGE PROFILE

SCALE: Horiz 1" = 50'
Vert 1" = 2'

DP-12

STATE OF CALIFORNIA - DEPARTMENT OF TRANSPORTATION
Caltrans

CARL GIBSON III — CONSULTANT FUNCTIONAL SUPERVISOR
CARL GIBSON III — CALCULATED-DESIGNED BY
CHECKED BY
JESUS RICO — REVISED BY
DATE REVISED
J.R. — 02/15/22

X:\SR 37_FAIRGROUNDS DRIVE\000_CAD\Sheets\017-Drainage\IB-Profiles\044A4414ib012.dgn

LAST REVISION 00-00-00 | DATE PLOTTED => 9/1/2022 | TIME PLOTTED => 12:38:16 AM

Dist	COUNTY	ROUTE	POST MILES TOTAL PROJECT	SHEET No.	TOTAL SHEETS
04	Sol	37	10.9		

REGISTERED CIVIL ENGINEER DATE

PLANS APPROVAL DATE

REGISTERED PROFESSIONAL ENGINEER No. Exp. CIVIL STATE OF CALIFORNIA

THE STATE OF CALIFORNIA OR ITS OFFICERS OR AGENTS SHALL NOT BE RESPONSIBLE FOR THE ACCURACY OR COMPLETENESS OF SCANNED COPIES OF THIS PLAN SHEET.

WMH CORPORATION
11070 WHITE ROCK RD
SUITE 140
RANCHO CORDOVA
CA 95670

SOLANO TRANSPORATION AUTHORITY
1 HARBOR CENTER
SUITE 130
SUISUN CITY, CA 94585

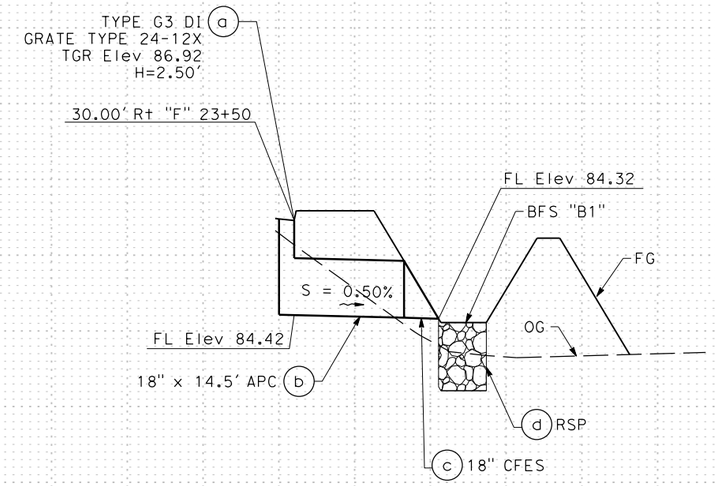

DRAINAGE SYSTEM No. 31

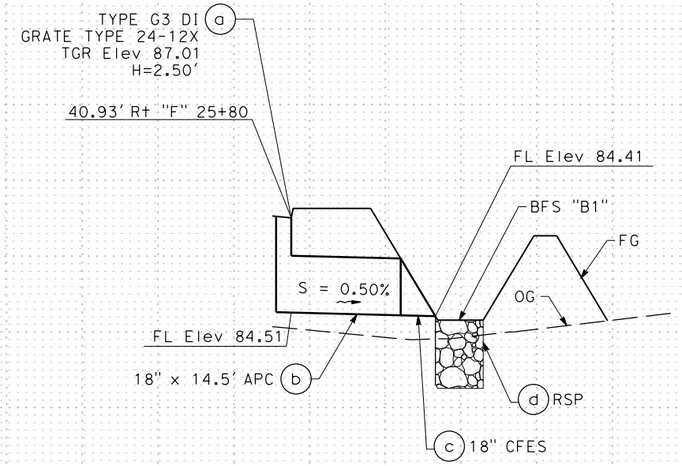

DRAINAGE SYSTEM No. 32

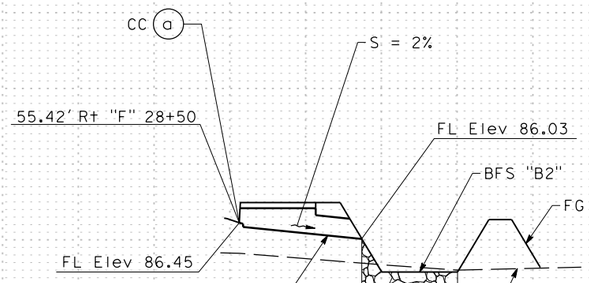

DRAINAGE SYSTEM No. 33

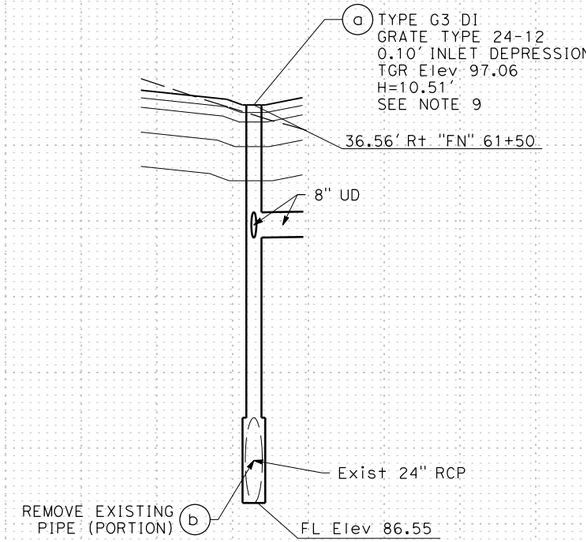

DRAINAGE SYSTEM No. 34

DRAINAGE PROFILE

SCALE: Horiz 1" = 50'
Vert 1" = 2'

DP-13

REVISED BY	DATE REVISED
J.R.	02/15/22

CALCULATED-DESIGNED BY	CHECKED BY
JESUS RICO	CARL GIBSON III

CONSULTANT FUNCTIONAL SUPERVISOR: CARL GIBSON III

STATE OF CALIFORNIA - DEPARTMENT OF TRANSPORTATION

Caltrans

X:\SR 37_FAIRGROUNDS DRIVE\000_CAD\Sheets\017-Drainage\IB-Profiles\044A4414ib013.dgn

LAST REVISION 00-00-00 | DATE PLOTTED => 9/1/2022 | TIME PLOTTED => 12:38:22 AM

Dist	COUNTY	ROUTE	POST MILES TOTAL PROJECT	SHEET No.	TOTAL SHEETS
04	Sol	37	10.9		

REGISTERED CIVIL ENGINEER DATE

PLANS APPROVAL DATE

REGISTERED PROFESSIONAL ENGINEER No. Exp. CIVIL STATE OF CALIFORNIA

THE STATE OF CALIFORNIA OR ITS OFFICERS OR AGENTS SHALL NOT BE RESPONSIBLE FOR THE ACCURACY OR COMPLETENESS OF SCANNED COPIES OF THIS PLAN SHEET.

WMH CORPORATION
11070 WHITE ROCK RD
SUITE 140
RANCHO CORDOVA
CA 95670

SOLANO TRANSPORATION AUTHORITY
1 HARBOR CENTER
SUITE 130
SUISUN CITY, CA 94585

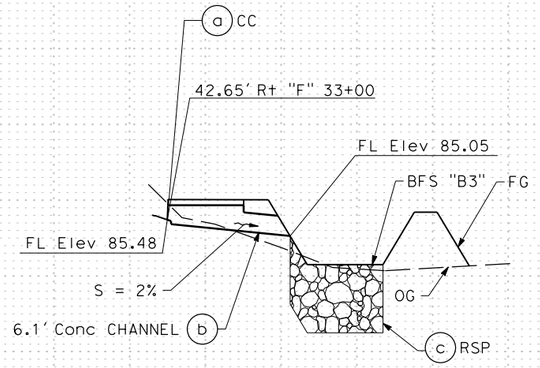

DRAINAGE SYSTEM No. 35

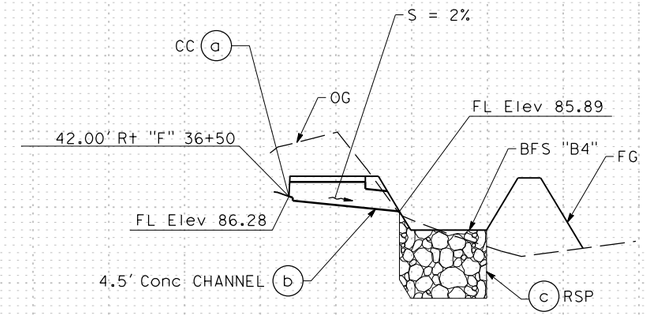

DRAINAGE SYSTEM No. 36

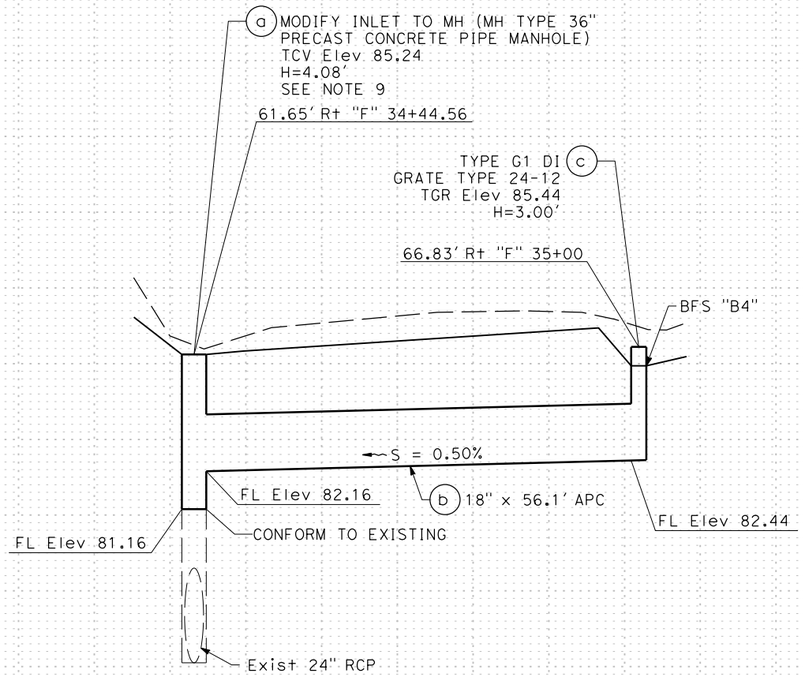

DRAINAGE SYSTEM No. 37

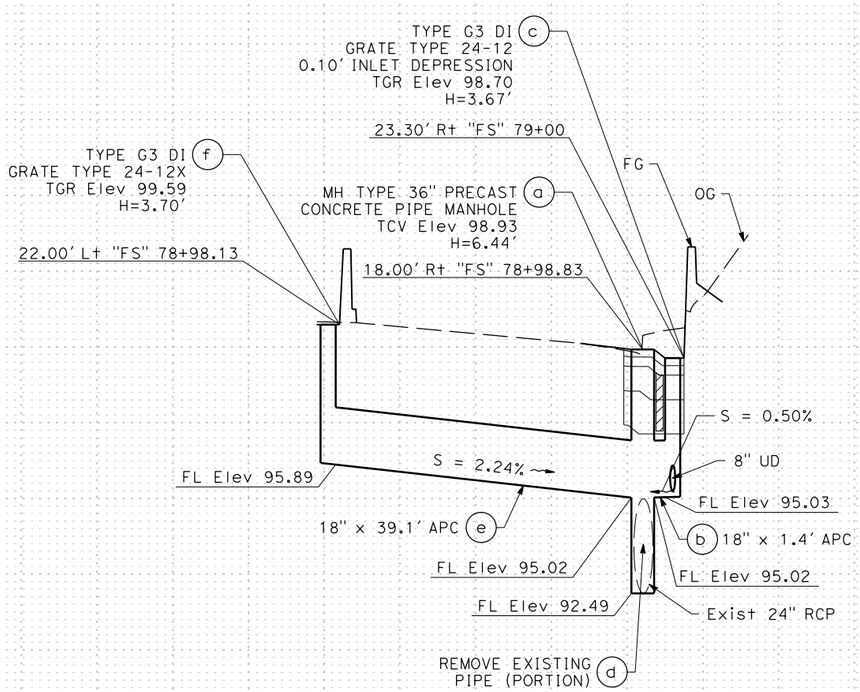

DRAINAGE SYSTEM No. 38

DRAINAGE PROFILE

SCALE: Horiz 1" = 50'
Vert 1" = 2'

DP-14

REVISED BY	DATE REVISED
J.R.	02/15/22

JESUS RICO — CARL GIBSON III — CALCULATED-DESIGNED BY
CHECKED BY
CARL GIBSON III — CONSULTANT FUNCTIONAL SUPERVISOR

STATE OF CALIFORNIA - DEPARTMENT OF TRANSPORTATION

Caltrans

X:\SR 37_FAIRGROUNDS DRIVE\000_CAD\Sheets\017-Drainage\IB-Profiles\044A4414ib014.dgn

LAST REVISION 00-00-00 | DATE PLOTTED => 9/1/2022 | TIME PLOTTED => 12:38:28 AM

Dist	COUNTY	ROUTE	POST MILES TOTAL PROJECT	SHEET No.	TOTAL SHEETS
04	Sol	37	10.9		

REGISTERED CIVIL ENGINEER DATE

PLANS APPROVAL DATE

REGISTERED PROFESSIONAL ENGINEER No. Exp. CIVIL STATE OF CALIFORNIA

THE STATE OF CALIFORNIA OR ITS OFFICERS OR AGENTS SHALL NOT BE RESPONSIBLE FOR THE ACCURACY OR COMPLETENESS OF SCANNED COPIES OF THIS PLAN SHEET.

WMH CORPORATION
11070 WHITE ROCK RD
SUITE 140
RANCHO CORDOVA
CA 95670

SOLANO TRANSPORATION AUTHORITY
1 HARBOR CENTER
SUITE 130
SUISUN CITY, CA 94585

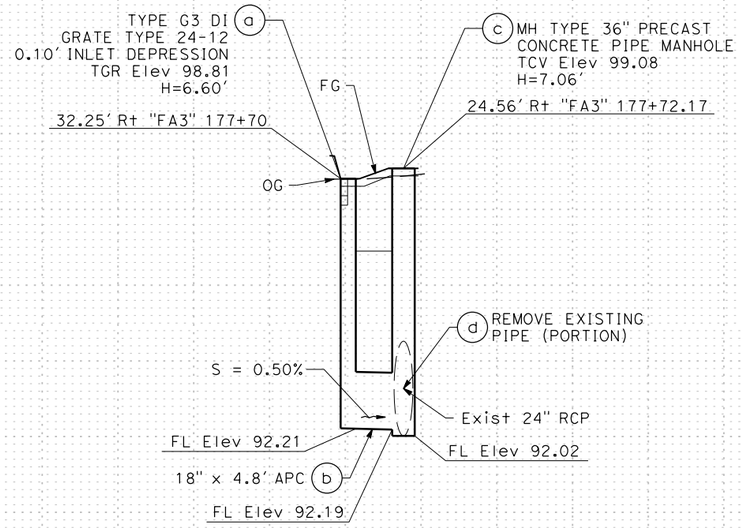

DRAINAGE SYSTEM No. 39

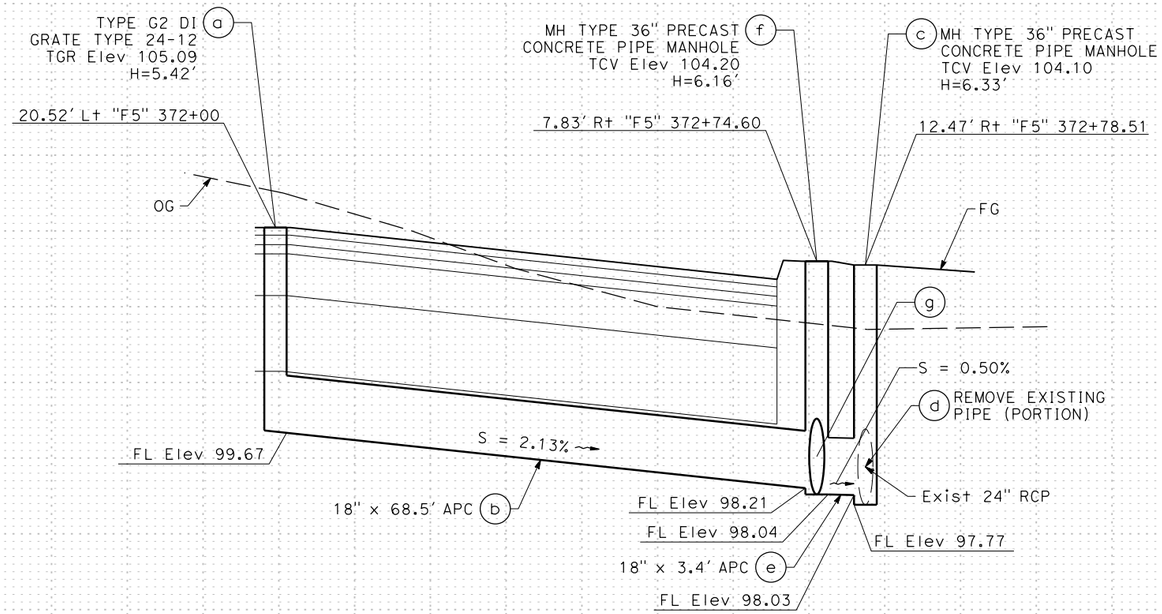

DRAINAGE SYSTEM No. 40

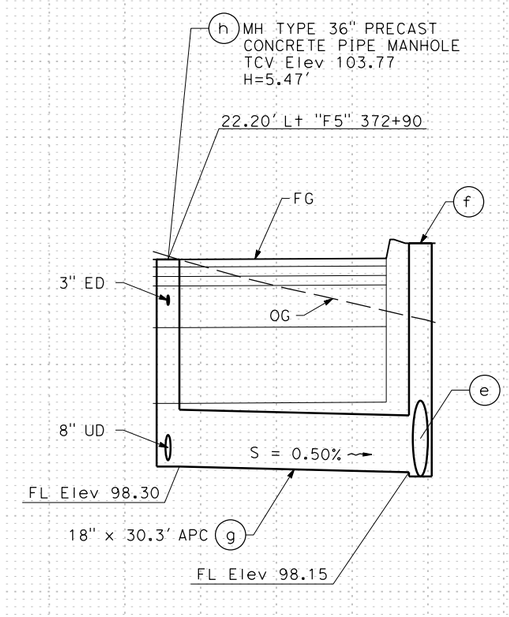

DRAINAGE SYSTEM No. 40

DRAINAGE PROFILE

SCALE: Horiz 1" = 50'
Vert 1" = 2'

DP-15

REVISED BY	DATE REVISED	CALCULATED-DESIGNED BY	CHECKED BY	CONSULTANT FUNCTIONAL SUPERVISOR
J.R.	02/15/22	JESUS RICO	CARL GIBSON III	CARL GIBSON III

STATE OF CALIFORNIA - DEPARTMENT OF TRANSPORTATION

Caltrans

X:\SR 37_FAIRGROUNDS DRIVE\000_CAD\Sheets\017-Drainage\IB-Profiles\044A4414ib015.dgn

LAST REVISION 00-00-00 DATE PLOTTED => 9/1/2022 TIME PLOTTED => 12:38:34 AM

Dist	COUNTY	ROUTE	POST MILES TOTAL PROJECT	SHEET No.	TOTAL SHEETS
04	Sol	37	10.9		

REGISTERED CIVIL ENGINEER DATE

PLANS APPROVAL DATE

REGISTERED PROFESSIONAL ENGINEER No. Exp. CIVIL STATE OF CALIFORNIA

THE STATE OF CALIFORNIA OR ITS OFFICERS OR AGENTS SHALL NOT BE RESPONSIBLE FOR THE ACCURACY OR COMPLETENESS OF SCANNED COPIES OF THIS PLAN SHEET.

WMH CORPORATION
11070 WHITE ROCK RD
SUITE 140
RANCHO CORDOVA
CA 95670

SOLANO TRANSPORATION AUTHORITY
1 HARBOR CENTER
SUITE 130
SUISUN CITY, CA 94585

NOTES:

1. OFFSETS AND FLOWLINE ELEVATIONS CALLED OUT FROM FLOWLINE OF DITCH.

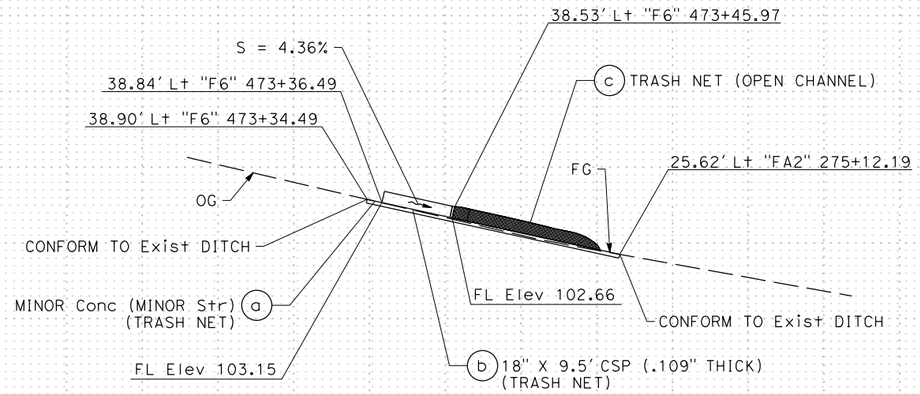

DRAINAGE SYSTEM No. 46

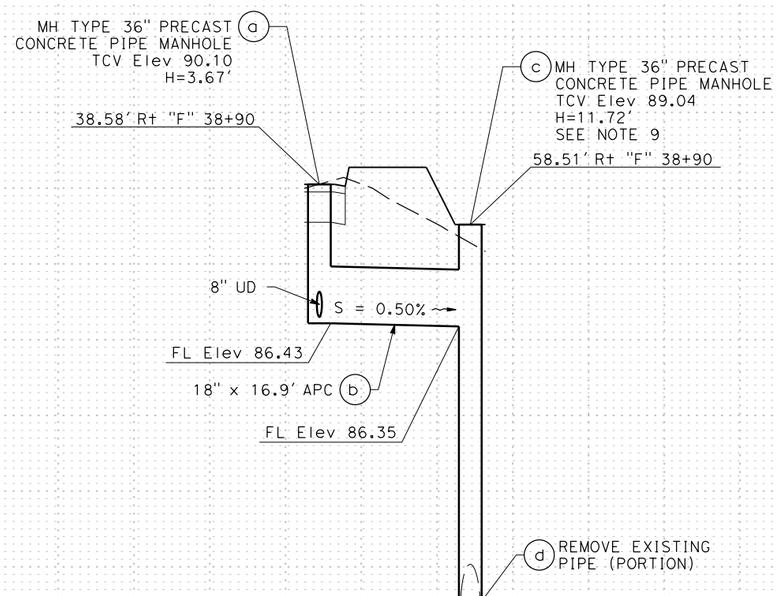

DRAINAGE SYSTEM No. 47

DRAINAGE PROFILE

SCALE: Horiz 1" = 50'
Vert 1" = 2'

DP-16

REVISED BY	DATE REVISED
J.R.	02/15/22

JESUS RICO — CARL GIBSON III — CALCULATED-DESIGNED BY — CHECKED BY

CONSULTANT FUNCTIONAL SUPERVISOR: CARL GIBSON III

STATE OF CALIFORNIA - DEPARTMENT OF TRANSPORTATION — Caltrans

X:\SR 37_FAIRGROUNDS DRIVE\000_CAD\Sheets\017-Drainage\IB-Profiles\044A4414ib016.dgn

LAST REVISION 00-00-00 — DATE PLOTTED => 9/1/2022 — TIME PLOTTED => 12:38:46 AM

Dist	COUNTY	ROUTE	POST MILES TOTAL PROJECT	SHEET No.	TOTAL SHEETS
04	Sol	37	10.9		

REGISTERED CIVIL ENGINEER DATE

PLANS APPROVAL DATE

REGISTERED PROFESSIONAL ENGINEER No. Exp. CIVIL STATE OF CALIFORNIA

THE STATE OF CALIFORNIA OR ITS OFFICERS OR AGENTS SHALL NOT BE RESPONSIBLE FOR THE ACCURACY OR COMPLETENESS OF SCANNED COPIES OF THIS PLAN SHEET.

WMH CORPORATION
11070 WHITE ROCK RD
SUITE 140
RANCHO CORDOVA
CA 95670

SOLANO TRANSPORATION AUTHORITY
1 HARBOR CENTER
SUITE 130
SUISUN CITY, CA 94585

NOTES:

1. OFFSETS AND FLOWLINE ELEVATIONS CALLED OUT FROM FLOWLINE OF DITCH.

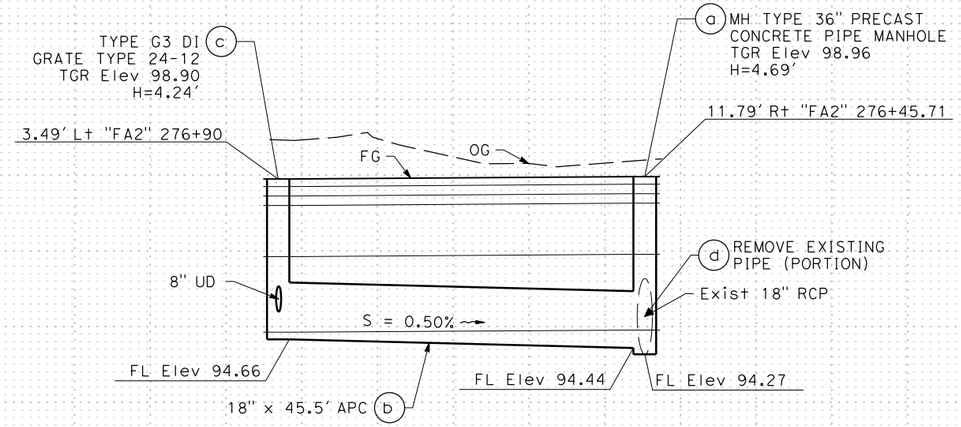

DRAINAGE SYSTEM No. 48

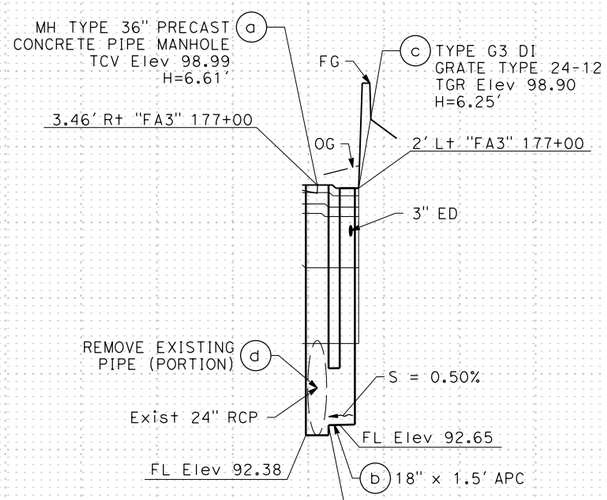

DRAINAGE SYSTEM No. 49

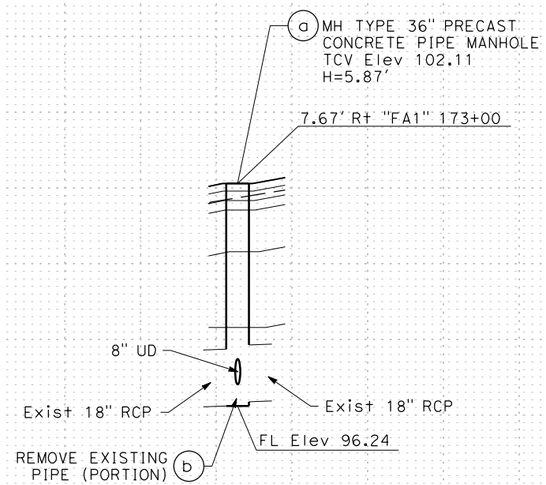

DRAINAGE SYSTEM No. 50

DRAINAGE PROFILE

SCALE: Horiz 1" = 50'
Vert 1" = 2'

DP-17

REVISED BY	DATE REVISED	CALCULATED-DESIGNED BY	CHECKED BY	CONSULTANT FUNCTIONAL SUPERVISOR
J.R.	02/15/22	JESUS RICO	CARL GIBSON III	CARL GIBSON III

STATE OF CALIFORNIA - DEPARTMENT OF TRANSPORTATION

X:\SR 37_FAIRGROUNDS DRIVE\000_CAD\Sheets\017-Drainage\IB-Profiles\044A4414ib017.dgn

LAST REVISION 00-00-00 | DATE PLOTTED => 9/1/2022 | TIME PLOTTED => 12:38:52 AM

Dist	COUNTY	ROUTE	POST MILES TOTAL PROJECT	SHEET No.	TOTAL SHEETS
04	Sol	37	10.9		

REGISTERED CIVIL ENGINEER DATE

PLANS APPROVAL DATE

REGISTERED PROFESSIONAL ENGINEER No. Exp. CIVIL STATE OF CALIFORNIA

THE STATE OF CALIFORNIA OR ITS OFFICERS OR AGENTS SHALL NOT BE RESPONSIBLE FOR THE ACCURACY OR COMPLETENESS OF SCANNED COPIES OF THIS PLAN SHEET.

WMH CORPORATION
11070 WHITE ROCK RD
SUITE 140
RANCHO CORDOVA
CA 95670

SOLANO TRANSPORATION AUTHORITY
1 HARBOR CENTER
SUITE 130
SUISUN CITY, CA 94585

NOTES:

1. OFFSETS AND FLOWLINE ELEVATIONS CALLED OUT FROM FLOWLINE OF DITCH.

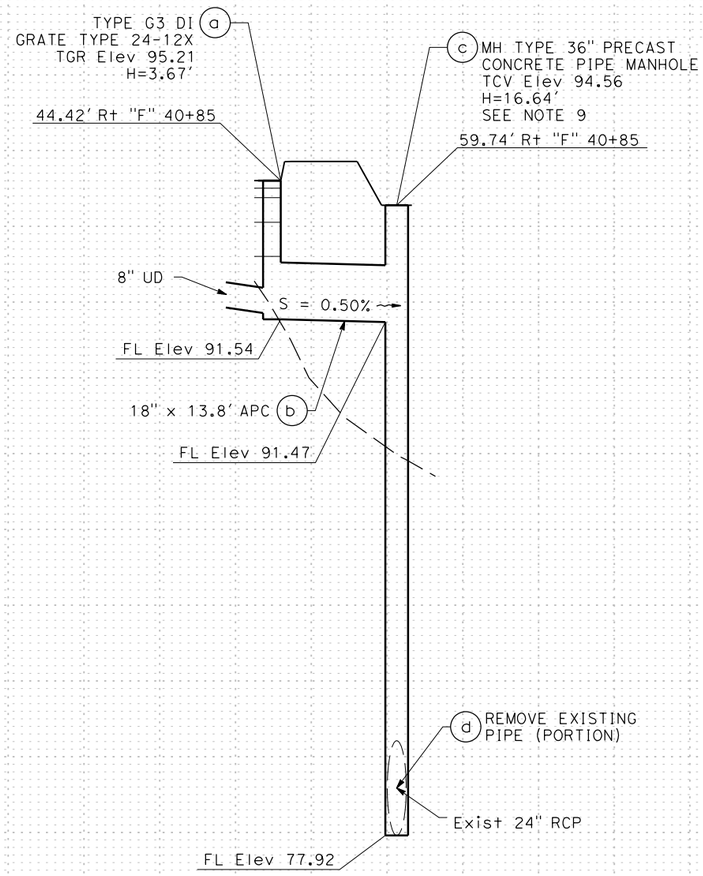

DRAINAGE SYSTEM No. 51

DRAINAGE PROFILE

SCALE: Horiz 1" = 50'
Vert 1" = 2'

DP-18

REVISED BY	DATE REVISED
J.R.	02/15/22

JESUS RICO — CARL GIBSON III

CALCULATED-DESIGNED BY — CHECKED BY

CONSULTANT FUNCTIONAL SUPERVISOR — CARL GIBSON III

STATE OF CALIFORNIA - DEPARTMENT OF TRANSPORTATION

Caltrans

X:\SR 37_FAIRGROUNDS DRIVE\000_CAD\Sheets\017-Drainage\IB-Profiles\044A4414ib018.dgn

LAST REVISION 00-00-00 — DATE PLOTTED => 9/1/2022 — TIME PLOTTED => 12:38:58 AM

Dist	COUNTY	ROUTE	POST MILES TOTAL PROJECT	SHEET No.	TOTAL SHEETS
04	Sol	37	10.9		

REGISTERED CIVIL ENGINEER DATE

PLANS APPROVAL DATE

REGISTERED PROFESSIONAL ENGINEER No. Exp. CIVIL STATE OF CALIFORNIA

THE STATE OF CALIFORNIA OR ITS OFFICERS OR AGENTS SHALL NOT BE RESPONSIBLE FOR THE ACCURACY OR COMPLETENESS OF SCANNED COPIES OF THIS PLAN SHEET.

WMH CORPORATION
11070 WHITE ROCK RD
SUITE 140
RANCHO CORDOVA
CA 95670

SOLANO TRANSPORTATION AUTHORITY
1 HARBOR CENTER
SUITE 130
SUISUN CITY, CA 94585

PRELIMINARY PLANS SUBJECT TO REVISION

NOTES:

1. AVOID COMPACTION OF EXISTING SUBGRADE BELOW BASIN.
2. SCARIFY SUBGRADE TO A DEPTH OF 3" Min IMMEDIATELY PRIOR TO PLACEMENT OF AGGREGATE STORAGE AND BIOTREATMENT SOIL MATERIALS.
3. COMPACT SOIL IMMEDIATELY BEHIND CURB TO 90% OF MAXIMUN DENSITY PER STANDARD PROCTOR TEST (ASTM D698).
4. UNDERDRAIN REQUIRED FOR ALL FACILITIES WITH IMPERMEABLE LINER.
5. PROVIDE ONE CLEANOUT PER PLANTER (Min) FOR ALL FACILITIES WITH UNDERDRAINS.
6. SEE DRAINAGE PROFILES FOR SLOPE.

BIOSWALE	SIDE SLOPES Z1:1	SIDE SLOPES Z2:1	BOTTOM WIDTH (W)	Min DEPTH (D)
BFS B1	3	3	6	2
BFS B2	3	3	10	2
BFS B3	3	3	10	2
BFS B4	3	3	10	2
BFS B5	3	3	6	2

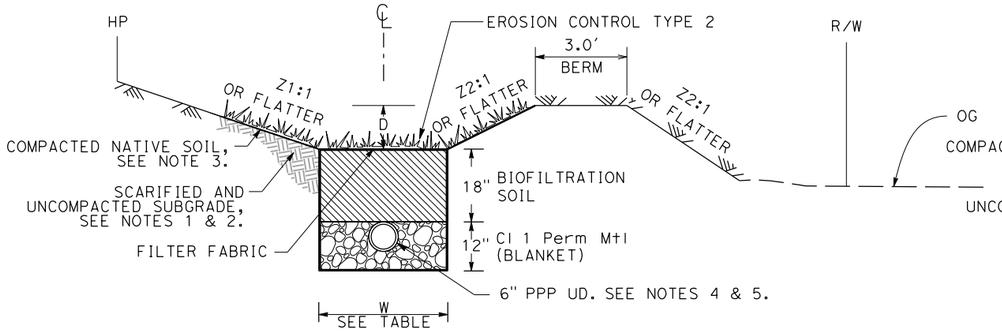

BIOFILTRATION SWALE WITH UNDERDRAIN

BIOFILTRATION SWALE "B1"
"F" 23+50 TO 25+80

BIOFILTRATION SWALE "B5"
"F" 39+50 TO 41+00

NOTE: FOR FLOW LINE ELEVATIONS, SEE TABLES.

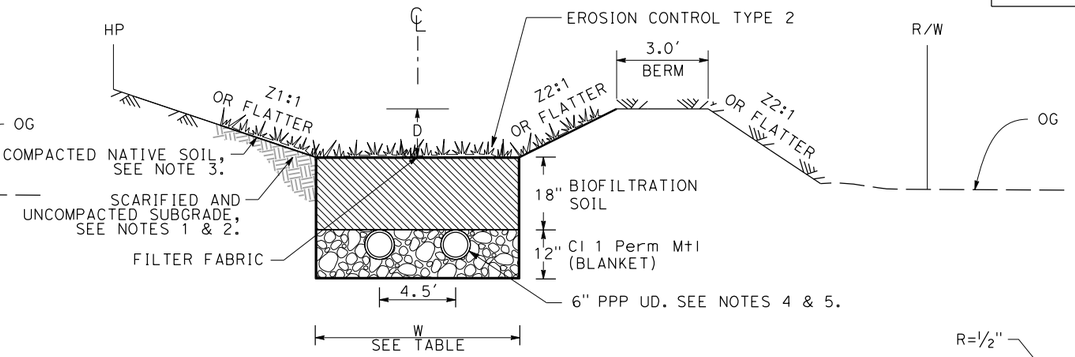

BIOFILTRATION SWALE WITH UNDERDRAIN

BIOFILTRATION SWALE "B2"
"F" 28+00TO 29+15

BIOFILTRATION SWALE "B3"
"F" 32+50 TO 33+50

BIOFILTRATION SWALE "B4"
"F" 35+00 TO 36+50

NOTE: FOR FLOW LINE ELEVATIONS, SEE TABLES.

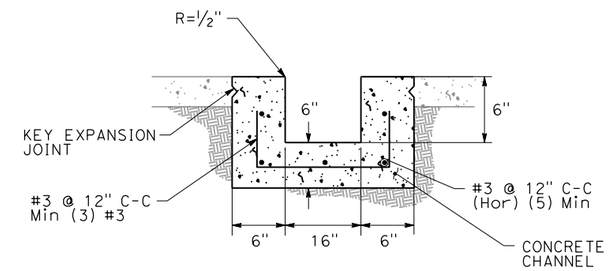

SECTION C-C

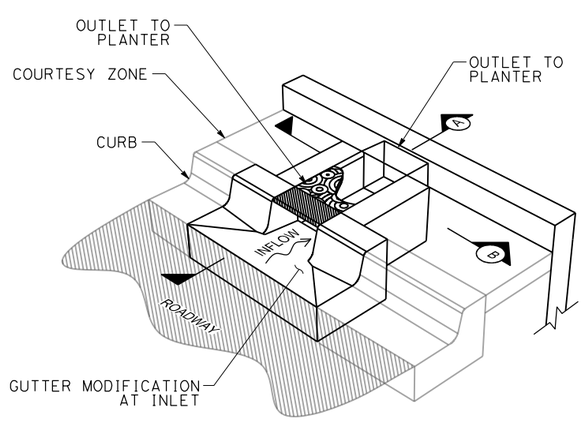

CURB CUT

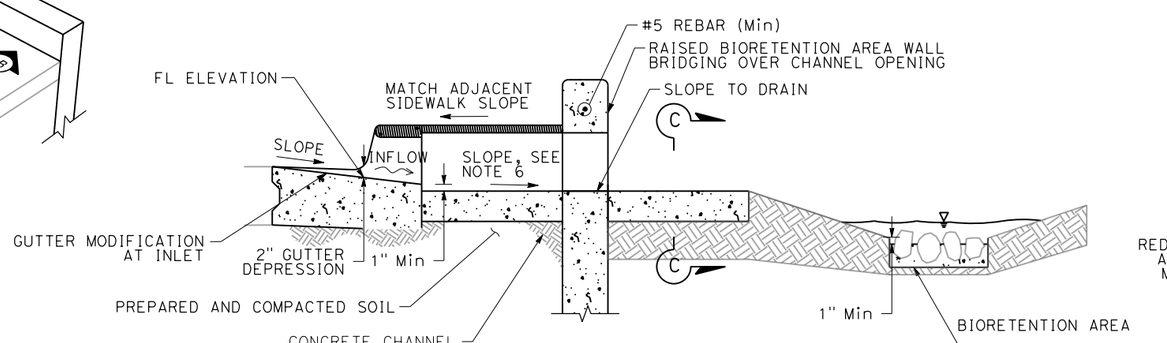

SECTION A-A

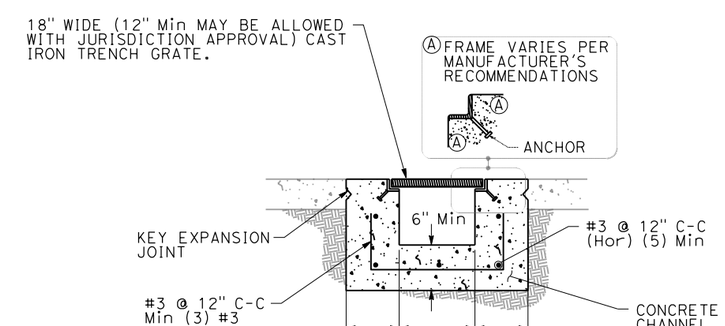

SECTION B-B

DRAINAGE DETAILS
NO SCALE

DD-1

REVISED BY	DATE REVISED	CALCULATED-DESIGNED BY	CHECKED BY	CONSULTANT FUNCTIONAL SUPERVISOR
J.R.	02/07/22	JESUS RICO	CARL GIBSON III	CARL GIBSON III

STATE OF CALIFORNIA - DEPARTMENT OF TRANSPORTATION

X:\SR 37_FAIRGROUNDS DRIVE\000_CAD\Sheets\017-Drainage\IC-Details\044A4414ic001.dgn

LAST REVISION 00-00-00 | DATE PLOTTED => 3/30/2023 | TIME PLOTTED => 10:39:14 AM

Dist	COUNTY	ROUTE	POST MILES TOTAL PROJECT	SHEET No.	TOTAL SHEETS
04	Sol	37	10.9		

REGISTERED CIVIL ENGINEER DATE

PLANS APPROVAL DATE

REGISTERED PROFESSIONAL ENGINEER No. Exp. CIVIL STATE OF CALIFORNIA

THE STATE OF CALIFORNIA OR ITS OFFICERS OR AGENTS SHALL NOT BE RESPONSIBLE FOR THE ACCURACY OR COMPLETENESS OF SCANNED COPIES OF THIS PLAN SHEET.

WMH CORPORATION
11070 WHITE ROCK RD
SUITE 140
RANCHO CORDOVA
CA 95670

SOLANO TRANSPORATION AUTHORITY
1 HARBOR CENTER
SUITE 130
SUISUN CITY, CA 94585

PRELIMINARY PLANS SUBJECT TO REVISION

NOTES:

1. FOR FLOW LINE ELEVATIONS, SEE TABLES.

BIOFILTRATION SWALE "B1"					
STATION				FLOW LINE ELEVATION	% SLOPE
52.36′	R†	"F"	23+50	84.22	-
55.50′	R†	"F"	24+00	84.07	-0.30%
56.64′	R†	"F"	24+50	83.92	-0.30%
60.29′	R†	"F"	25+00	84.07	0.30%
61.49′	R†	"F"	25+50	84.22	0.30%
63.30′	R†	"F"	25+80	84.31	0.30%

BIOFILTRATION SWALE "B2"					
STATION				FLOW LINE ELEVATION	% SLOPE
80.12′	R†	"F"	28+00	85.00	-
79.22′	R†	"F"	28+50	85.15	0.30%
78.32′	R†	"F"	29+00	85.30	0.30%
78.04′	R†	"F"	29+15	85.35	0.33%

BIOFILTRATION SWALE "B3"					
STATION				FLOW LINE ELEVATION	% SLOPE
67.86′	R†	"F"	32+50	84.45	-
66.10′	R†	"F"	33+00	84.30	-0.30%
68.47′	R†	"F"	33+50	84.15	-0.30%

BIOFILTRATION SWALE "B4"					
STATION				FLOW LINE ELEVATION	% SLOPE
66.83′	R†	"F"	35+00	84.94	-
65.93′	R†	"F"	35+50	85.09	0.30%
64.58′	R†	"F"	36+00	85.24	0.30%
63.08′	R†	"F"	36+50	85.39	0.30%

BIOFILTRATION SWALE "B5"					
STATION				FLOW LINE ELEVATION	% SLOPE
78.26′	R†	"F"	39+50	85.27	-
77.56′	R†	"F"	40+00	87.27	4.00%
76.33′	R†	"F"	40+50	89.27	4.00%
73.57′	R†	"F"	41+00	91.27	4.00%

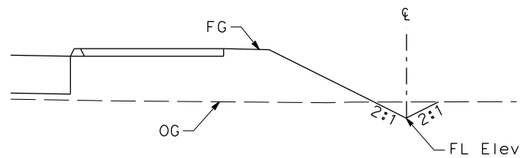

DITCH "D2"
"FS" 23+50 TO 29+15

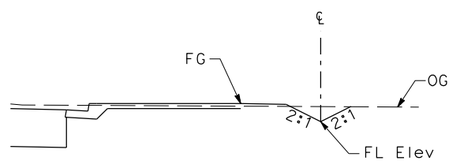

DITCH "D3"
"F" 30+57 TO 38+00

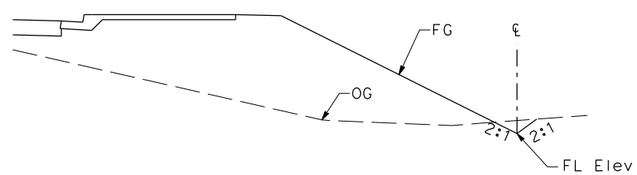

DITCH "D4"
"F" 39+00 TO 39+50

"D2" DITCH					
STATION				FLOW LINE ELEVATION	% SLOPE
70.78′	R†	"F"	23+50	83.08	-
73.92′	R†	"F"	24+00	82.93	-0.30%
75.06′	R†	"F"	24+50	82.78	-0.30%
76.16′	R†	"F"	25+00	83.78	2.00%
77.34′	R†	"F"	25+50	83.94	0.31%
79.23′	R†	"F"	25+80	83.47	-1.55%
63.44′	R†	"F"	26+00	83.16	-1.55%
64.58′	R†	"F"	26+50	83.35	0.38%
69.57′	R†	"F"	27+00	83.50	0.30%
74.56′	R†	"F"	27+50	83.65	0.30%
98.83′	R†	"F"	28+00	84.43	1.56%
96.21′	R†	"F"	28+50	85.16	1.46%
93.31′	R†	"F"	29+00	85.97	1.62%
92.49′	R†	"F"	29+15	86.20	1.52%

"D3" DITCH					
STATION				FLOW LINE ELEVATION	% SLOPE
70.74′	R†	"F"	30+57	85.77	-
69.50′	R†	"F"	31+00	85.64	-0.30%
67.73′	R†	"F"	31+50	86.10	0.92%
66.55′	R†	"F"	32+00	85.44	-1.32%
84.62′	R†	"F"	32+50	84.73	-1.42%
84.03′	R†	"F"	33+00	83.99	-1.49%
85.96′	R†	"F"	33+50	83.29	-1.40%
70.68′	R†	"F"	34+00	82.50	-1.58%
70.84′	R†	"F"	34+50	83.00	1.00%
87.90′	R†	"F"	35+00	83.58	1.17%
86.04′	R†	"F"	35+50	84.05	0.94%
84.59′	R†	"F"	36+00	84.22	0.33%
83.14′	R†	"F"	36+50	84.37	0.30%
66.88′	R†	"F"	37+00	83.88	-0.97%
65.77′	R†	"F"	37+50	84.24	0.71%
63.95′	R†	"F"	38+00	85.38	2.28%

"D4" DITCH					
STATION				FLOW LINE ELEVATION	% SLOPE
72.93′	R†	"F"	39+00	86.03	-
90.20′	R†	"F"	39+50	86.29	0.53%

DRAINAGE DETAILS

NO SCALE

DD-2

REVISED BY	DATE REVISED
J.R.	02/07/22

JESUS RICO — CARL GIBSON III
CALCULATED-DESIGNED BY — CHECKED BY
CONSULTANT FUNCTIONAL SUPERVISOR: CARL GIBSON III

STATE OF CALIFORNIA - DEPARTMENT OF TRANSPORTATION

X:\SR 37_FAIRGROUNDS DRIVE\000_CAD\Sheets\017-Drainage\IC-Details\044A4414ic002.dgn

LAST REVISION 00-00-00 | DATE PLOTTED => 2/16/2022 | TIME PLOTTED => 11:09:13 AM

Dist	COUNTY	ROUTE	POST MILES TOTAL PROJECT	SHEET No.	TOTAL SHEETS
04	Sol	37	10.9		

REGISTERED CIVIL ENGINEER DATE

PLANS APPROVAL DATE

REGISTERED PROFESSIONAL ENGINEER No. Exp. CIVIL STATE OF CALIFORNIA

THE STATE OF CALIFORNIA OR ITS OFFICERS OR AGENTS SHALL NOT BE RESPONSIBLE FOR THE ACCURACY OR COMPLETENESS OF SCANNED COPIES OF THIS PLAN SHEET.

WMH CORPORATION
11070 WHITE ROCK RD
SUITE 140
RANCHO CORDOVA
CA 95670

SOLANO TRANSPORATION AUTHORITY
1 HARBOR CENTER
SUITE 130
SUISUN CITY, CA 94585

PRELIMINARY PLANS SUBJECT TO REVISION

NOTES:

1. FOR FLOW LINE ELEVATIONS, SEE TABLE.

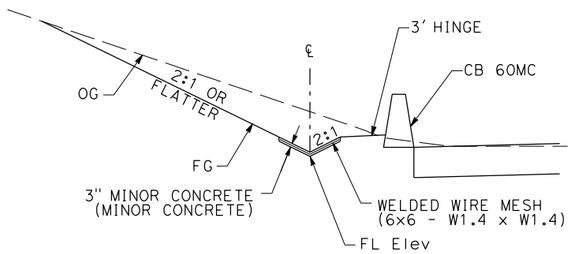

DITCH "D5"
"FS" 78+81.22 TO "FA3" 177+95

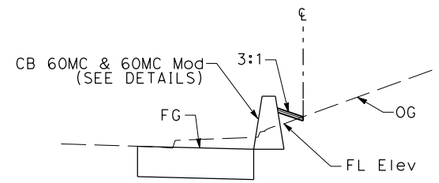

DITCH "D5"
"FS" 78+81.22 TO "FS" 80+45.17

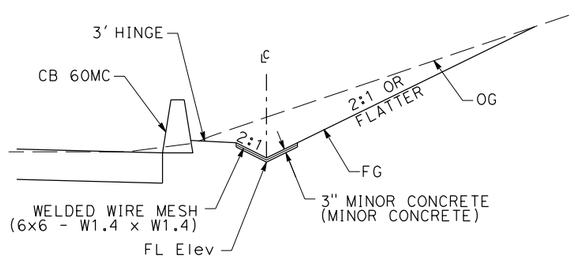

DITCH "D5"
"FS" 80+45.17 TO "FA4" 275+40

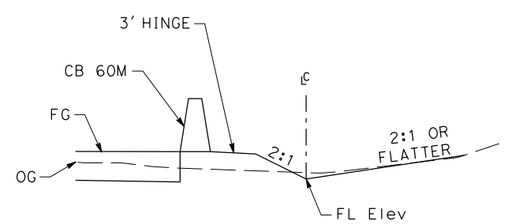

DITCH "D5"
"FA4" 275+40 TO 276+17.81

"D5" DITCH					
STATION				FLOW LINE ELEVATION	% SLOPE
11.89'	Lt	"FA3"	178+00	99.48	-
11.02'	Lt	"FA3"	177+90	99.43	0.50%
8.69'	Lt	"FA3"	177+80	99.38	0.50%
11.11'	Lt	"FA3"	177+70	98.84	5.40%
10.90'	Lt	"FA3"	177+60	99.13	-2.90%
10.39'	Lt	"FA3"	177+50	99.18	-0.50%
9.90'	Lt	"FA3"	177+40	99.23	-0.50%
9.49'	Lt	"FA3"	177+30	99.28	-0.50%
9.08'	Lt	"FA3"	177+20	99.33	-0.50%
8.03'	Lt	"FA3"	177+10	100.28	-9.50%
32.64'	Rt	"FS"	78+77	100.73	-8.93%
31.63'	Rt	"FS"	78+81	100.77	1.00%
26.78'	Rt	"FS"	79+00	100.96	1.00%
25.87'	Rt	"FS"	79+11	101.07	1.00%
23.45'	Rt	"FS"	79+22	101.17	0.91%
22.47'	Rt	"FS"	79+32	101.26	0.90%
21.02'	Rt	"FS"	79+50	101.32	0.33%
21.03'	Rt	"FS"	80+00	101.42	0.20%
21.01'	Rt	"FS"	80+07	101.44	0.29%
20.66'	Rt	"FS"	80+16	101.48	0.44%
21.13'	Rt	"FS"	80+30	101.55	0.50%
11.47'	Rt	"FA4"	275+00	99.16	-4.78%
13.92'	Rt	"FA4"	275+10	99.03	-1.30%
14.51'	Rt	"FA4"	275+20	98.98	-0.50%
14.64'	Rt	"FA4"	275+30	98.93	-0.50%
14.60'	Rt	"FA4"	275+40	98.88	-0.50%
14.37'	Rt	"FA4"	275+50	98.83	-0.50%
14.03'	Rt	"FA4"	275+60	98.96	1.30%
13.55'	Rt	"FA4"	275+70	99.07	1.10%
12.81'	Rt	"FA4"	275+80	99.23	1.60%
12.29'	Rt	"FA4"	275+90	99.36	1.30%

DRAINAGE DETAILS

NO SCALE

DD-3

REVISED BY	DATE REVISED
J.R.	02/07/22

CALCULATED-DESIGNED BY: JESUS RICO
CHECKED BY: CARL GIBSON III
CONSULTANT FUNCTIONAL SUPERVISOR: CARL GIBSON III

STATE OF CALIFORNIA - DEPARTMENT OF TRANSPORTATION
Caltrans

X:\SR 37_FAIRGROUNDS DRIVE\000_CAD\Sheets\017-Drainage\IC-Details\044A4414ic003.dgn

LAST REVISION 00-00-00 | DATE PLOTTED => 2/16/2022 | TIME PLOTTED => 11:09:16 AM

Dist	COUNTY	ROUTE	POST MILES TOTAL PROJECT	SHEET No.	TOTAL SHEETS
04	Sol	37	10.9		

REGISTERED CIVIL ENGINEER DATE

PLANS APPROVAL DATE

REGISTERED PROFESSIONAL ENGINEER No. Exp. CIVIL STATE OF CALIFORNIA

THE STATE OF CALIFORNIA OR ITS OFFICERS OR AGENTS SHALL NOT BE RESPONSIBLE FOR THE ACCURACY OR COMPLETENESS OF SCANNED COPIES OF THIS PLAN SHEET.

WMH CORPORATION
11070 WHITE ROCK RD
SUITE 140
RANCHO CORDOVA
CA 95670

SOLANO TRANSPORATION AUTHORITY
1 HARBOR CENTER
SUITE 130
SUISUN CITY, CA 94585

PRELIMINARY PLANS SUBJECT TO REVISION

NOTES:

1. FOR FLOW LINE ELEVATIONS, SEE TABLE.

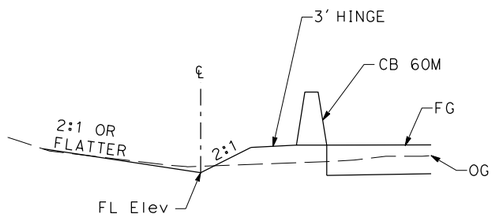

DITCH "D6"
"FA2" 276+10 TO 276+50

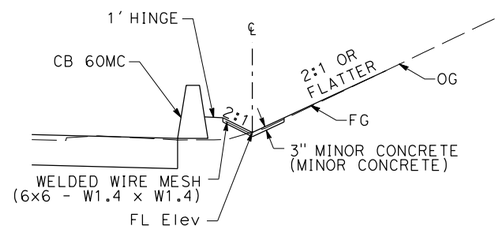

DITCH "D6"
"FA2" 276+50 TO "FN" 64+64.94
"FN" 66+42.01 TO "FA1" 173+15

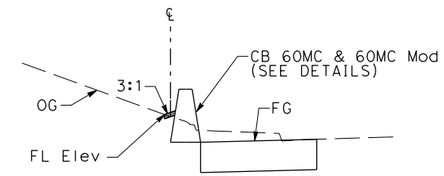

DITCH "D6"
"FN" 64+64.94 TO 66+42.01

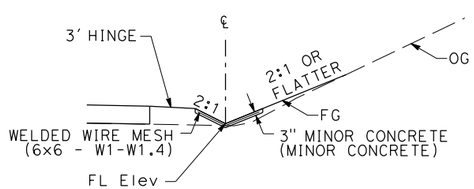

DITCH "D6"
"FA1" 172+50 TO 173+15

"D6" DITCH					
STATION				FLOW LINE ELEVATION	% SLOPE
22.29'	L+	"FA2"	276+00	98.24	-
21.27'	L+	"FA2"	276+10	98.15	-0.90%
19.55'	L+	"FA2"	276+20	97.92	-2.30%
20.04'	L+	"FA2"	276+30	97.78	-1.40%
19.18'	L+	"FA2"	276+40	97.63	-1.50%
18.28'	L+	"FA2"	276+50	97.48	-1.50%
16.81'	L+	"FA2"	276+60	98.07	5.90%
14.98'	L+	"FA2"	276+70	98.66	5.90%
12.72'	L+	"FA2"	276+80	99.25	5.90%
10.29'	L+	"FA2"	276+91	99.90	5.91%
21.22'	L+	"FN"	64+83	101.65	7.54%
21.48'	L+	"FN"	65+00	101.70	0.29%
21.29'	L+	"FN"	65+06	101.73	0.50%
20.31'	L+	"FN"	65+50	101.78	0.11%
21.04'	L+	"FN"	65+82	102.11	1.03%
20.67'	L+	"FN"	66+00	102.17	0.33%
21.03'	L+	"FN"	66+06	102.53	6.00%
20.01'	L+	"FN"	66+15	102.31	-2.44%
4.95'	R+	"FA1"	173+89	101.93	-2.35%
8.25'	R+	"FA1"	173+50	101.35	-1.49%
11.24'	R+	"FA1"	173+39	101.47	1.09%
12.48'	R+	"FA1"	173+35	101.49	0.50%
13.94'	R+	"FA1"	173+30	101.53	0.80%
16.18'	R+	"FA1"	173+20	101.72	1.90%
18.90'	R+	"FA1"	173+10	100.71	-10.10%
18.69'	R+	"FA1"	173+00	100.82	1.10%
18.20'	R+	"FA1"	172+84	101.39	3.56%
17.59'	R+	"FA1"	172+50	102.70	-

DRAINAGE DETAILS
NO SCALE

DD-4

REVISED BY	DATE REVISED
J.R.	02/07/22

CALCULATED-DESIGNED BY	CHECKED BY
JESUS RICO	CARL GIBSON III

CONSULTANT FUNCTIONAL SUPERVISOR: CARL GIBSON III

STATE OF CALIFORNIA - DEPARTMENT OF TRANSPORTATION

Caltrans

X:\SR 37_FAIRGROUNDS DRIVE\000_CAD\Sheets\017-Drainage\IC-Details\044A4414ic004.dgn

LAST REVISION 00-00-00 | DATE PLOTTED => 2/16/2022 | TIME PLOTTED => 11:09:19 AM

Dist	COUNTY	ROUTE	POST MILES TOTAL PROJECT	SHEET No.	TOTAL SHEETS
04	Sol	37	10.9		

REGISTERED CIVIL ENGINEER DATE

PLANS APPROVAL DATE

REGISTERED PROFESSIONAL ENGINEER No. Exp. CIVIL STATE OF CALIFORNIA

THE STATE OF CALIFORNIA OR ITS OFFICERS OR AGENTS SHALL NOT BE RESPONSIBLE FOR THE ACCURACY OR COMPLETENESS OF SCANNED COPIES OF THIS PLAN SHEET.

WMH CORPORATION
11070 WHITE ROCK RD
SUITE 140
RANCHO CORDOVA
CA 95670

SOLANO TRANSPORTATION AUTHORITY
1 HARBOR CENTER
SUITE 130
SUISUN CITY, CA 94585

PRELIMINARY PLANS SUBJECT TO REVISION

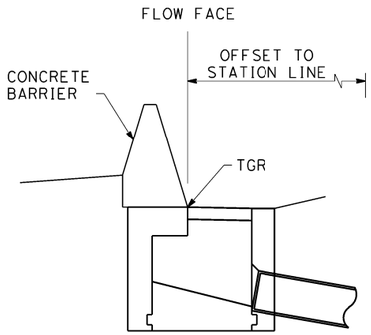

SECTION C-C
(CONCRETE BARRIER)

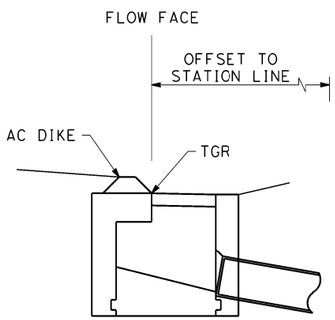

SECTION D-D
(AC DIKE)

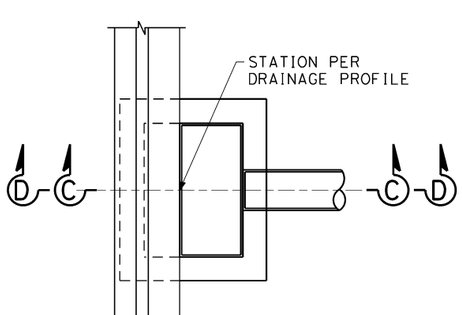

PLAN

INLET ADJACENT TO AC DIKE OR CONCRETE BARRIER

NOTE:

FOR INFORMATION NOT SHOWN, SEE STANDARD PLAN D73 THRU D74B SHEETS.

ABBREVIATIONS:

TGR TOP OF GRATE (ACCOUNTS FOR INLET DEPRESSION)
TCV TOP OF COVER

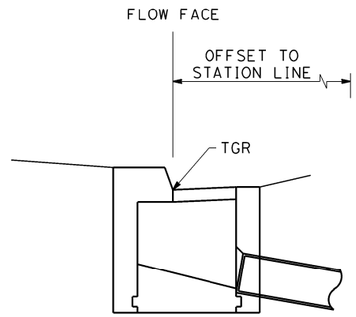

ELEVATION

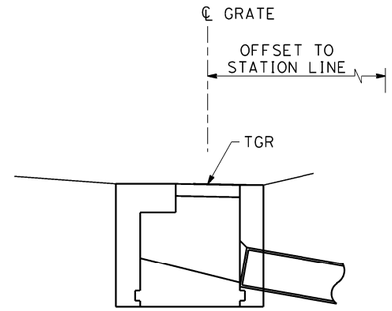

ELEVATION

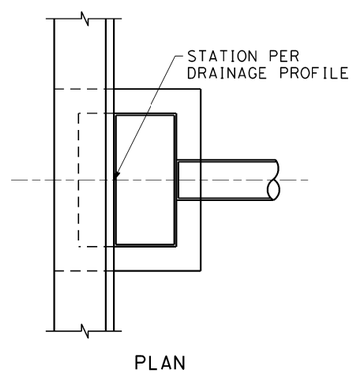

PLAN

INLET ADJACENT TO CURB

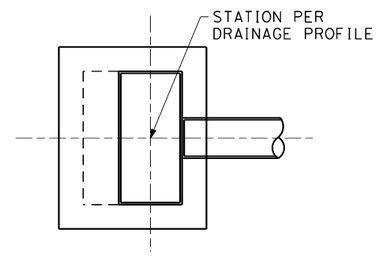

PLAN

FIELD INLET

DRAINAGE DETAILS

NO SCALE

DD-5

REVISED BY	DATE REVISED
J.R.	02/07/22

CALCULATED-DESIGNED BY: JESUS RICO
CHECKED BY: KRASSIMIR KANALIOTOV

CONSULTANT FUNCTIONAL SUPERVISOR: CARL GIBSON III

STATE OF CALIFORNIA - DEPARTMENT OF TRANSPORTATION
Caltrans

X:\SR 37_F\

LAST REVISION 00-00-00
DATE PLOTTED => 8/31/2022
TIME PLOTTED => 12:34:47 AM

Dist	COUNTY	ROUTE	POST MILES TOTAL PROJECT	SHEET No.	TOTAL SHEETS
04	Sol	37	10.9		

REGISTERED CIVIL ENGINEER DATE

PLANS APPROVAL DATE

REGISTERED PROFESSIONAL ENGINEER No. Exp. CIVIL STATE OF CALIFORNIA

THE STATE OF CALIFORNIA OR ITS OFFICERS OR AGENTS SHALL NOT BE RESPONSIBLE FOR THE ACCURACY OR COMPLETENESS OF SCANNED COPIES OF THIS PLAN SHEET.

WMH CORPORATION
11070 WHITE ROCK RD
SUITE 140
RANCHO CORDOVA
CA 95670

SOLANO TRANSPORATION AUTHORITY
1 HARBOR CENTER
SUITE 130
SUISUN CITY, CA 94585

PRELIMINARY PLANS SUBJECT TO REVISION

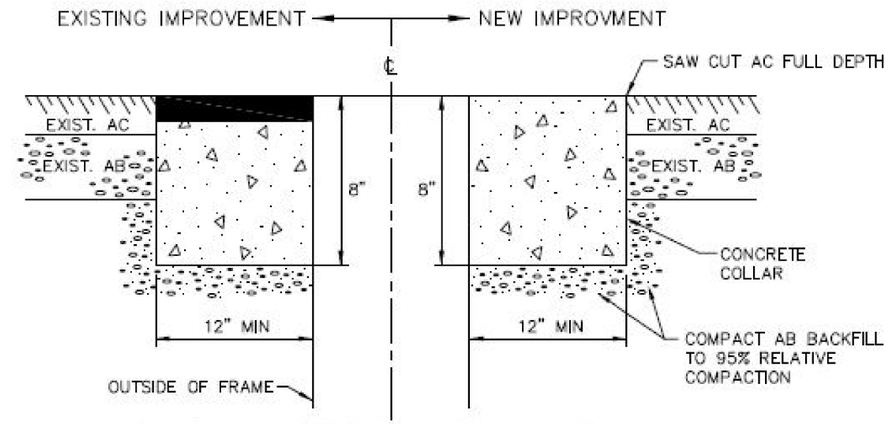

WATER VALVE OR STREET MONUMENT DETAIL

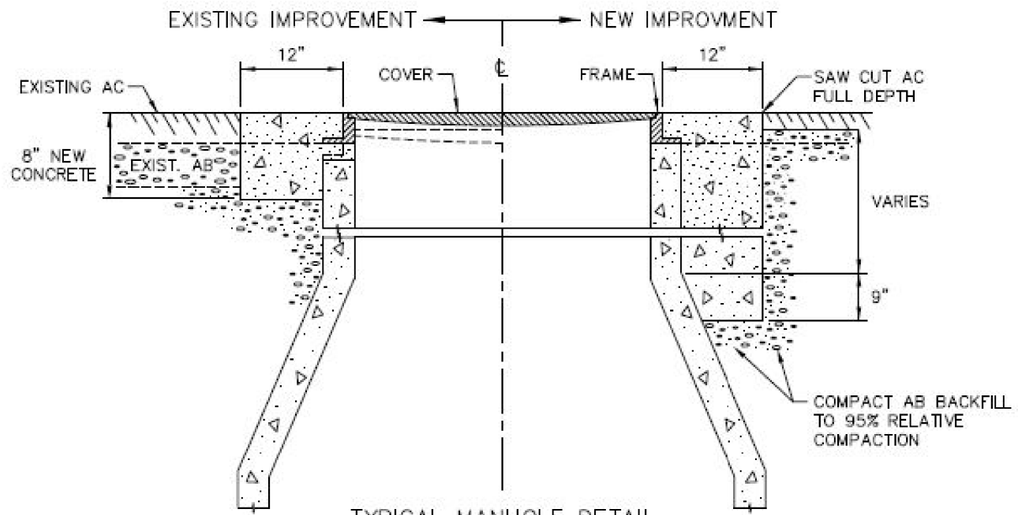

TYPICAL MANHOLE DETAIL

NOTES

1. WATER VALVE OR MANHOLE OR STREET MONUMENT SHALL BE RAISED TO GRADE AFTER PAVING.
2. LAMP BLACK CONCRETE COLLAR
3. AS AN ALTERNATIVE EXTENSION RINGS MAY BE USED FOR RAISING COVERS, SUBJECT TO APPROVAL OF THE ENGINEER.

Vallejo

CITY OF VALLEJO STANDARD DETAIL

STANDARD TO RAISE A WATER VALVE, MANHOLE OR STREET MONUMENTATION

APPROVED BY:

DIRECTOR OF PUBLIC WORKS

DRAWING NO: 3-20

SCALE: NONE

DATE: 09/13/11

DRAINAGE DETAILS

NO SCALE

DD-6

REVISED BY	DATE REVISED

JESUS RICO — CARL GIBSON III

CALCULATED-DESIGNED BY — CHECKED BY

CONSULTANT FUNCTIONAL SUPERVISOR — CARL GIBSON III

STATE OF CALIFORNIA - DEPARTMENT OF TRANSPORTATION

Caltrans

X:\SR 37_F/

LAST REVISION 00-00-00 | DATE PLOTTED => 12/23/2021 | TIME PLOTTED => 10:13:29 AM

Dist	COUNTY	ROUTE	POST MILES TOTAL PROJECT	SHEET No.	TOTAL SHEETS
04	Sol	37	10.9		

REGISTERED CIVIL ENGINEER DATE

PLANS APPROVAL DATE

REGISTERED PROFESSIONAL ENGINEER No. Exp. CIVIL STATE OF CALIFORNIA

THE STATE OF CALIFORNIA OR ITS OFFICERS OR AGENTS SHALL NOT BE RESPONSIBLE FOR THE ACCURACY OR COMPLETENESS OF SCANNED COPIES OF THIS PLAN SHEET.

WMH CORPORATION
11070 WHITE ROCK RD
SUITE 140
RANCHO CORDOVA
CA 95670

SOLANO TRANSPORTATION AUTHORITY
1 HARBOR CENTER
SUITE 130
SUISUN CITY, CA 94585

PRELIMINARY PLANS SUBJECT TO REVISION

NOTES:

1. ON ALL PIPE UP TO 30" ID USE FLEXIBLE COMPRESSION GASKET OR BOOT CONNECTOR CONFORMING TO ASTM C-923. CONNECTION SHALL BE WATER AND SOIL TIGHT. FOR PIPES GREATER THAN 30" ID, BASE MAY BE CAST-IN-PLACE AND A WATER STOP CONFORMING TO ASTM C-923 SHALL BE USED.
2. SUMP SHALL BE 1'-0" DEEP, MEASURED FROM INVERT OF OUTFALL PIPE. SUMP NOT REQUIRED IF OUTFALL PIPE IS 24" ID OR LARGER.
3. RISER SECTIONS, CONES, AND ADJUSTING RINGS SHALL CONFORM TO ASTM C-478.
4. ALL JOINTS SHALL BE MADE WITH PREFORMED PLASTIC JOINT SEALING COMPOUND. FOLLOWING INSTALLATION GROUT ALL INTERIOR AND EXTERIOR JOINTS.
5. CONCENTRIC COMPONENTS SHALL BE USED UNLESS OTHERWISE SPECIFIED ON THE PLANS.
6. PRE-CAST MANHOLES SHALL BE SIZED TO PROVIDE THE FOLLOWING: THE ANNULAR SPACE ON THE INSIDE OF THE MANHOLE BARREL BETWEEN CORED PIPE CONNECTION HOLES SHALL BE A MINIMUM OF 10". IF THE CONNECTION HOLE IS CAST MONOLITHICALLY WITH THE MANHOLE BARREL THE MEASUREMENT SHALL BE TAKEN FROM THE FINISHED CONCRETE CONNECTION SURFACE.
7. CONE FOR MANHOLES GREATER THAN 60" DIAMETER SHALL BE INDIVIDUALLY DESIGNED.
8. FOR FRAME AND COVER, SEE STANDARD PLAN B7-11, DETAIL U45
9. STATIONS AND OFFSETS GIVEN ON DRAINAGE PROFILES ARE TO THE CENTER OF THE MANHOLE, NOT TO THE CENTER OF COVER.
10. ALL WORK ON E10 FACILITIES PER E10 STANDARD DETAILS AND SPECS AVAILABLE ON E10 WEBSITE.

TABLE OF MINIMUM DIMENSIONS

MANHOLE SIZE	A	B	T	W
36"	36"	24"	8"	4"
48"	48"	30"	8.5"	5"
60"	60"	36"	9"	6"
72"	72"	SEE NOTE 7	10"	7"

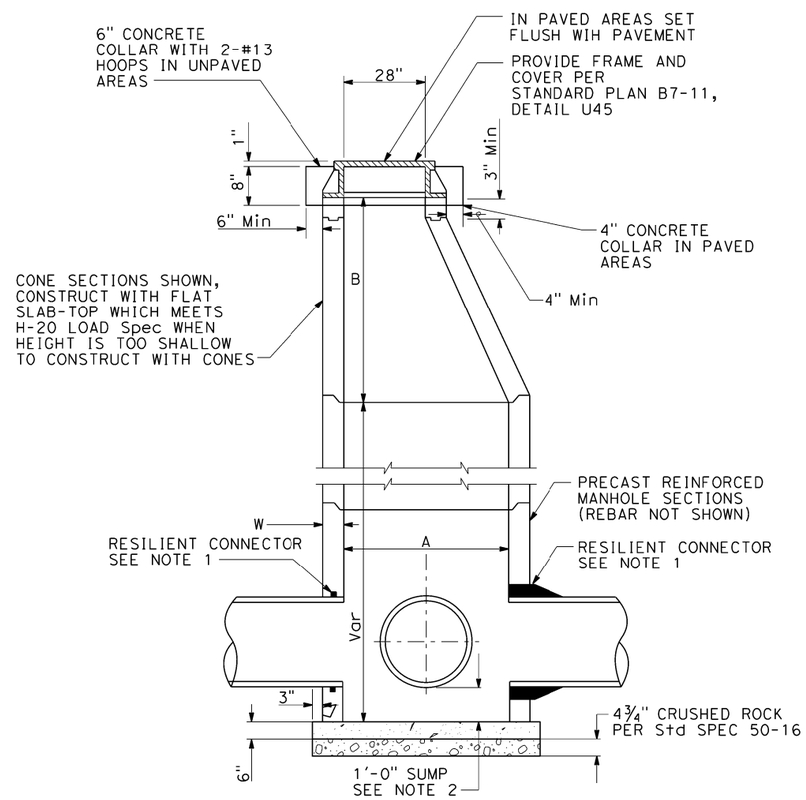

PRECAST CONCRETE PIPE MANHOLE

2 e g k o | 5 c e g p | 9 c | 10 a | 12 b d | 14 a j | 15 a c | 16 a | 17 a | 18 a | 19 a f | 20 a | 21 e

22 c f | 24 a | 25 c | 26 c | 27 a e u | 28 c | 29 a | 30 a | 38 a | 39 c | 40 c f h | 47 a c | 48 a | 49 a | 50 a | 51 c

DRAINAGE DETAILS

NO SCALE

DD-7

REVISED BY	DATE REVISED
J.R.	02/07/22

JESUS RICO — CARL GIBSON III

CALCULATED-DESIGNED BY — CHECKED BY

CONSULTANT FUNCTIONAL SUPERVISOR — CARL GIBSON III

STATE OF CALIFORNIA - DEPARTMENT OF TRANSPORTATION — Caltrans

X:\SR 37_F/

LAST REVISION 00-00-00 | DATE PLOTTED => 8/31/2022 TIME PLOTTED => 12:34:14 AM

Dist	COUNTY	ROUTE	POST MILES TOTAL PROJECT	SHEET No.	TOTAL SHEETS
04	Sol	37	10.9		

REGISTERED CIVIL ENGINEER DATE

PLANS APPROVAL DATE

REGISTERED PROFESSIONAL ENGINEER No. Exp. CIVIL STATE OF CALIFORNIA

THE STATE OF CALIFORNIA OR ITS OFFICERS OR AGENTS SHALL NOT BE RESPONSIBLE FOR THE ACCURACY OR COMPLETENESS OF SCANNED COPIES OF THIS PLAN SHEET.

WMH CORPORATION
11070 WHITE ROCK RD
SUITE 140
RANCHO CORDOVA
CA 95670

SOLANO TRANSPORATION AUTHORITY
1 HARBOR CENTER
SUITE 130
SUISUN CITY, CA 94585

PRELIMINARY PLANS SUBJECT TO REVISION

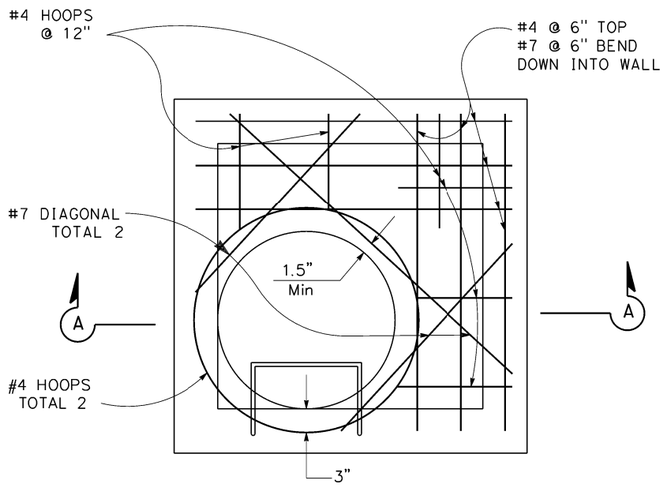

PLAN

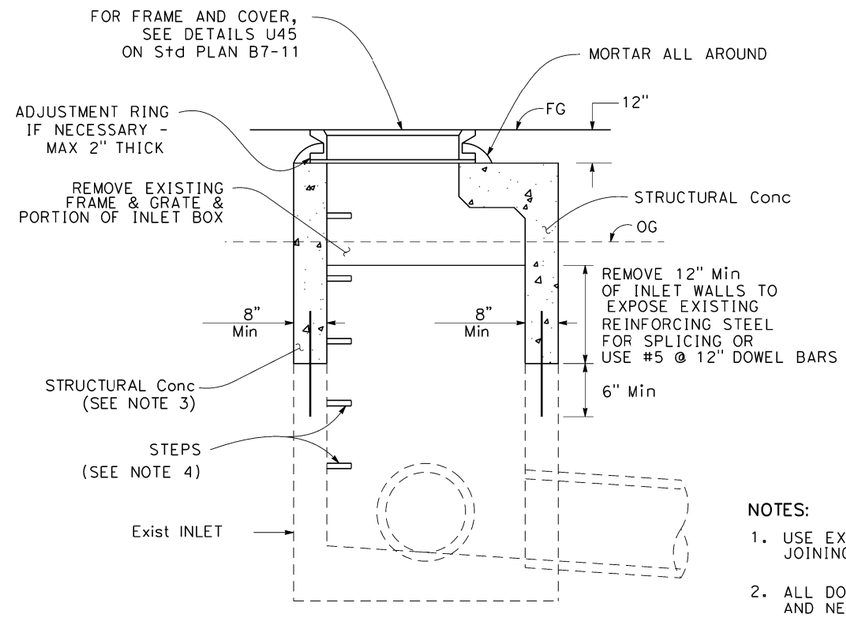

SECTION A-A

NOTES:

1. USE EXISTING REINFORCING STEEL WHEN JOINING NEW CONCRETE TO EXISTING
2. ALL DOWELS AT JOINTS BETWEEN EXISTING AND NEW CONCRETE SHALL BE EMBEDDED 6" Min INTO EXISTING CONCRETE.
3. FOR WALL REINFORCEMENT AND DETAILS NOT SHOWN, SEE Std PLAN D72B - TYPE G2 INLET.
4. SEE Std PLAN D74 AND NOTE 4 OF Sta PLAN D72F FOR STEP DETAILS AND REQUIREMENTS.

MODIFY INLET TO MANHOLE

12 k 13 a 36 d 37 a

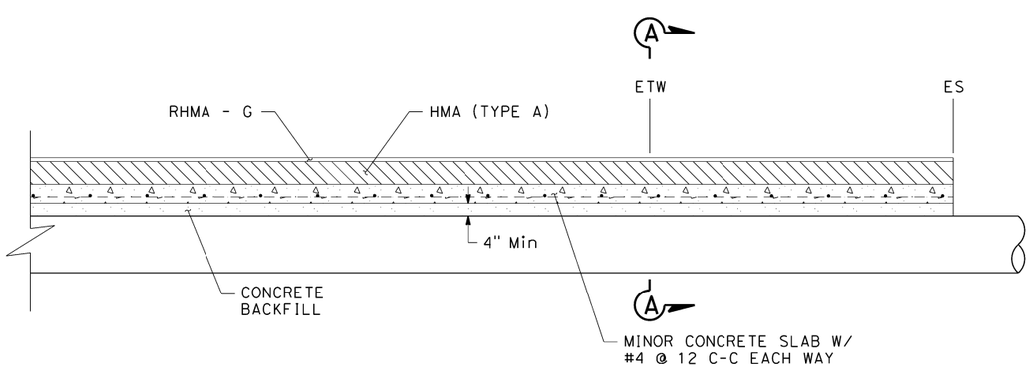

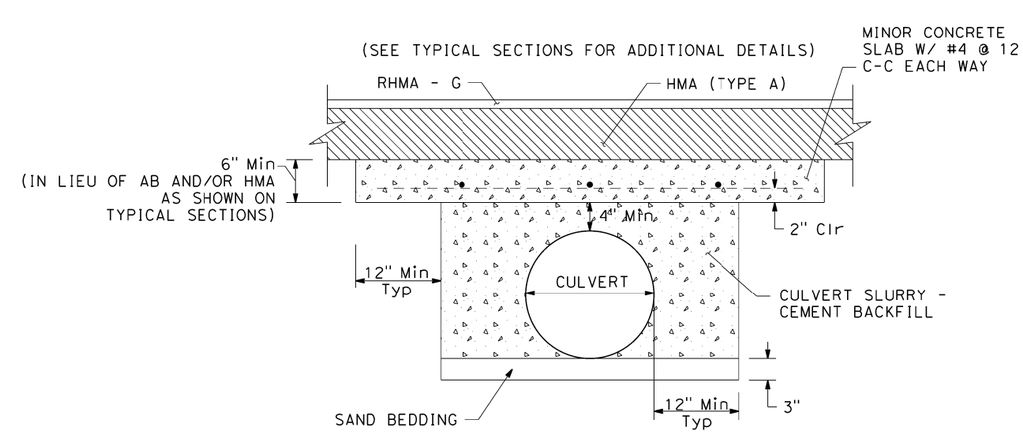

SECTION A-A

MINOR CONCRETE (PIPE ENCASEMENT)

18 b 20 b 21 d

27 b d f n p r 30 b 38 b

DRAINAGE DETAILS

NO SCALE

DD-8

REVISED BY	DATE REVISED	CALCULATED-DESIGNED BY	CHECKED BY	CONSULTANT FUNCTIONAL SUPERVISOR
J.R.	02/07/22	JESUS RICO	CARL GIBSON III	CARL GIBSON III

STATE OF CALIFORNIA - DEPARTMENT OF TRANSPORTATION

Caltrans

X:\SR 37_F\

LAST REVISION 00-00-00 | DATE PLOTTED => 2/15/2022 | TIME PLOTTED => 5:04:11 PM

Dist	COUNTY	ROUTE	POST MILES TOTAL PROJECT	SHEET No.	TOTAL SHEETS
04	Sol	37	10.9		

REGISTERED CIVIL ENGINEER DATE

PLANS APPROVAL DATE

REGISTERED PROFESSIONAL ENGINEER No. Exp. CIVIL STATE OF CALIFORNIA

THE STATE OF CALIFORNIA OR ITS OFFICERS OR AGENTS SHALL NOT BE RESPONSIBLE FOR THE ACCURACY OR COMPLETENESS OF SCANNED COPIES OF THIS PLAN SHEET.

WMH CORPORATION
11070 WHITE ROCK RD
SUITE 140
RANCHO CORDOVA
CA 95670

SOLANO TRANSPORATION AUTHORITY
1 HARBOR CENTER
SUITE 130
SUISUN CITY, CA 94585

PRELIMINARY PLANS SUBJECT TO REVISION

NOTES:

1. FOR RSP CLASS AND DIMENSIONS, SEE TABLE 1.
2. FOR FLARED END SECTION DETAILS NOT SHOWN, SEE STANDARD PLAN D94B FOR PRECAST CONCRETE FLARED END SECTION TYPE A.
3. FOR FLARED END SECTION LENGTHS SEE TABLE 2.
4. CUTOFF WALL ONLY PRESENT WITH CFES, SEE STANDARD PLAN D94B.
5. SEE DRAINAGE PROFILES FOR SLOPE.
6. IF APC IS NOT CONCRETE, USE CONCRETE COLLAR TO CONNECT CFES TO PIPE.

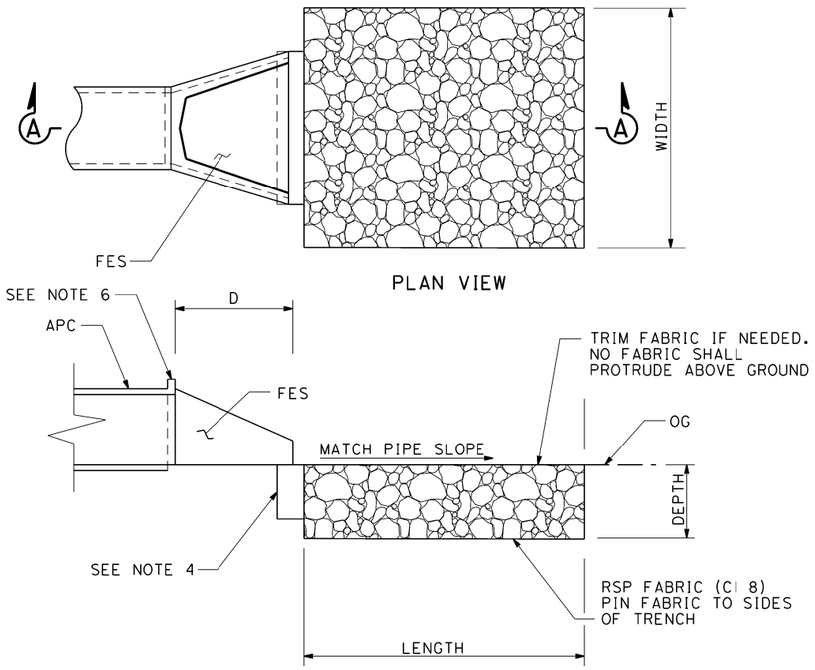

SECTION A-A

ROCK SLOPE PROTECTION (RSP)

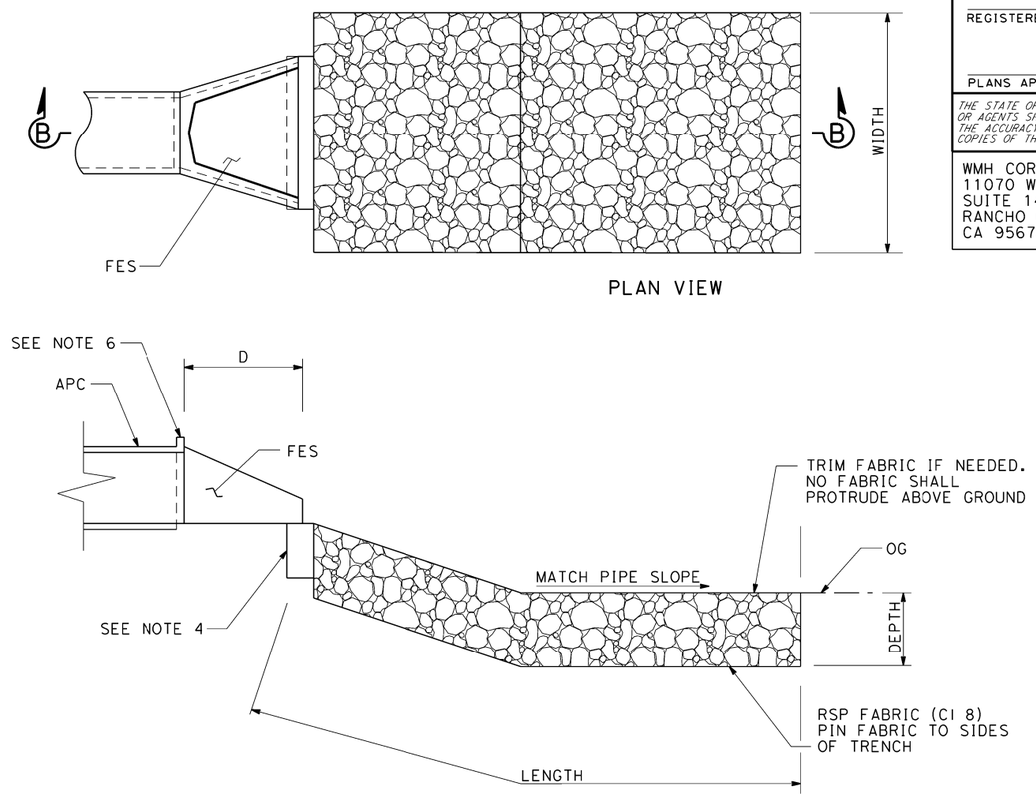

SECTION B-B

ROCK SLOPE PROTECTION (RSP)

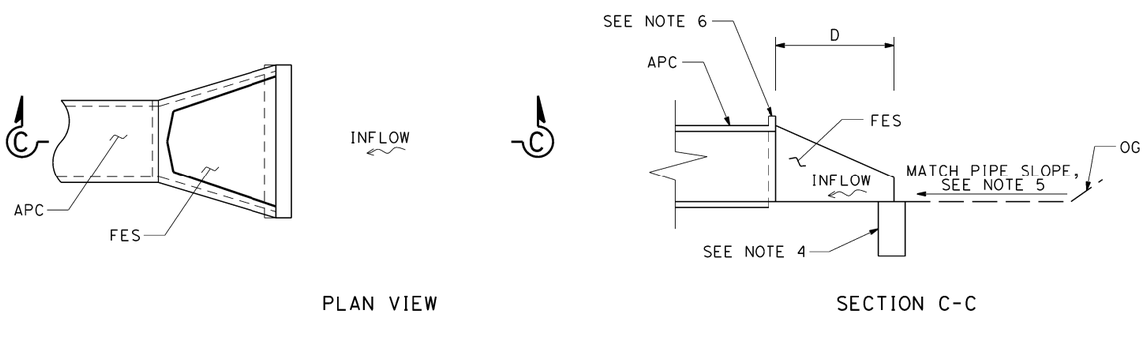

CONCRETE FLARED END SECTION TO APC

TABLE 1				
DRAINAGE UNIT	RSP CLASS	LENGTH	DEPTH	WIDTH
		FT	FT	FT
1d	FACING, METHOD B	6.3	1.8	4.5
3d	FACING, METHOD B	6.3	1.8	4.5
4d	FACING, METHOD B	11.5	1.8	4.5
6d	FACING, METHOD B	11.3	1.8	4.5
8d	FACING, METHOD B	11.5	1.8	4.5
11d	FACING, METHOD B	12.4	1.8	4.5
12n	FACING, METHOD B	6.5	1.8	4.5
26f	FACING, METHOD B	6.7	1.8	4.5
31d	FACING, METHOD B	6.3	1.8	4.5
32d	FACING, METHOD B	6.3	1.8	4.5
33d	FACING, METHOD B	12.8	1.8	4.5
35d	FACING, METHOD B	12.4	1.8	4.5
36d	FACING, METHOD B	11.6	1.8	4.5

TABLE 2	
DRAINAGE UNIT	D (LF)
1c	4.6
2r	2.3
3c	4.6
11c	4.6
12m	4.6
26e	4.6
31c	4.6
32c	4.6

DRAINAGE DETAILS

NO SCALE

DD-9

REVISED BY	DATE REVISED
J.R.	02/07/22

JESUS RICO — CARL GIBSON III

CALCULATED-DESIGNED BY — CHECKED BY

CONSULTANT FUNCTIONAL SUPERVISOR — CARL GIBSON III

STATE OF CALIFORNIA - DEPARTMENT OF TRANSPORTATION

Caltrans

X:\SR 37_F\

LAST REVISION 00-00-00 — DATE PLOTTED => 2/15/2022 — TIME PLOTTED => 5:09:01 PM

Dist	COUNTY	ROUTE	POST MILES TOTAL PROJECT	SHEET No.	TOTAL SHEETS
04	Sol	37	10.9		

REGISTERED CIVIL ENGINEER DATE

PLANS APPROVAL DATE

REGISTERED PROFESSIONAL ENGINEER No. Exp. CIVIL STATE OF CALIFORNIA

THE STATE OF CALIFORNIA OR ITS OFFICERS OR AGENTS SHALL NOT BE RESPONSIBLE FOR THE ACCURACY OR COMPLETENESS OF SCANNED COPIES OF THIS PLAN SHEET.

WMH CORPORATION
11070 WHITE ROCK RD
SUITE 140
RANCHO CORDOVA
CA 95670

SOLANO TRANSPORTATION AUTHORITY
1 HARBOR CENTER
SUITE 130
SUISUN CITY, CA 94585

PRELIMINARY PLANS SUBJECT TO REVISION

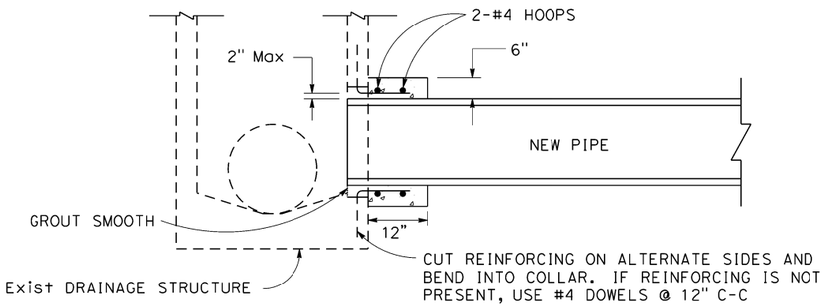

PIPE CONNECTION TO EXISTING DRAINAGE STRUCTURE

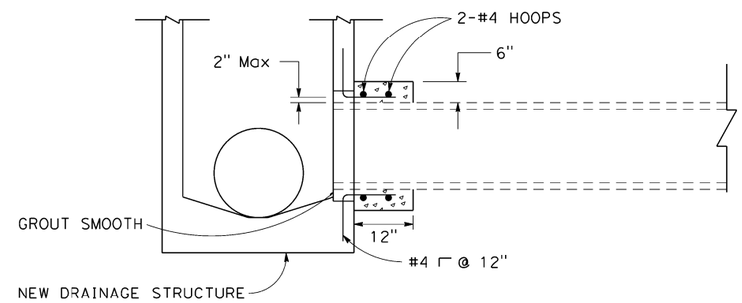

CONNECT EXISTING PIPE TO NEW DRAINAGE STRUCTURE

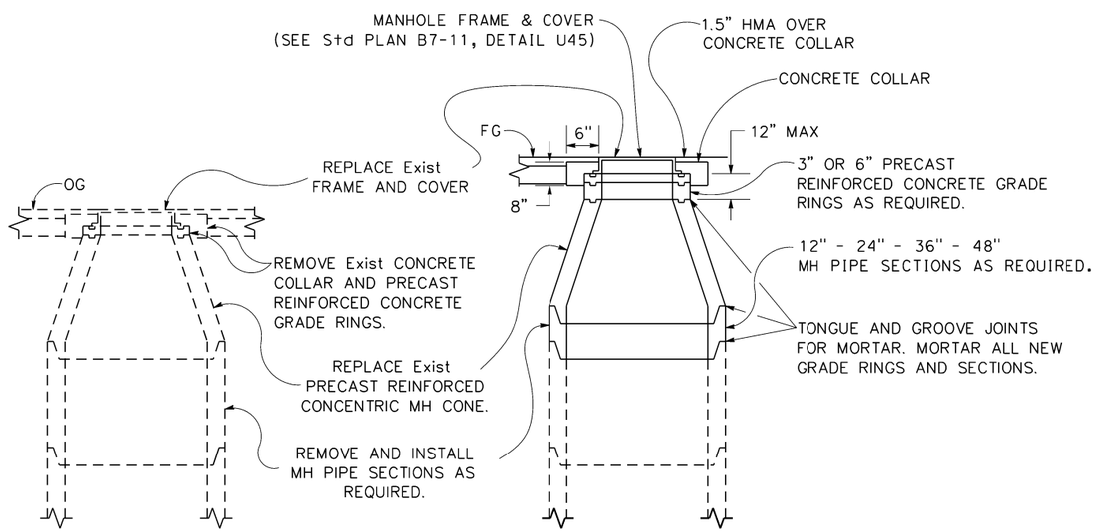

ADJUST MANHOLE TO GRADE

12 1

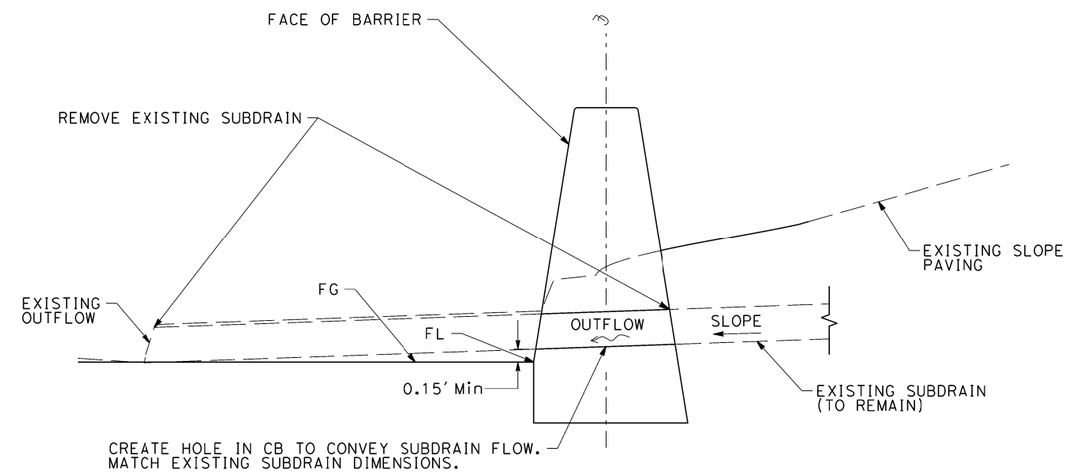

EXISTING CURB CUT OUTLET MODIFICATION AT CONCRETE BARRIER (TYPE 60MC)

SEE CONSTRUCTION DETAILS FOR CONCRETE BARRIER

DRAINAGE DETAILS

NO SCALE

DD-10

REVISED BY	DATE REVISED
J.R.	02/07/22

JESUS RICO — CARL GIBSON III

CALCULATED-DESIGNED BY — CHECKED BY

CONSULTANT FUNCTIONAL SUPERVISOR — CARL GIBSON III

STATE OF CALIFORNIA - DEPARTMENT OF TRANSPORTATION

Caltrans

X:\SR 37_F,

LAST REVISION 00-00-00 | DATE PLOTTED => 8/31/2022 | TIME PLOTTED => 12:35:20 AM

Dist	COUNTY	ROUTE	POST MILES TOTAL PROJECT	SHEET No.	TOTAL SHEETS
04	Sol	37	10.9		

REGISTERED CIVIL ENGINEER DATE

PLANS APPROVAL DATE

REGISTERED PROFESSIONAL ENGINEER No. Exp. CIVIL STATE OF CALIFORNIA

THE STATE OF CALIFORNIA OR ITS OFFICERS OR AGENTS SHALL NOT BE RESPONSIBLE FOR THE ACCURACY OR COMPLETENESS OF SCANNED COPIES OF THIS PLAN SHEET.

WMH CORPORATION
11070 WHITE ROCK RD
SUITE 140
RANCHO CORDOVA
CA 95670

SOLANO TRANSPORATION AUTHORITY
1 HARBOR CENTER
SUITE 130
SUISUN CITY, CA 94585

PRELIMINARY PLANS SUBJECT TO REVISION

NOTES:

1. THE LIMITS OF SMOOTH CONCRETE FINISH SHOULD EXTEND UNDER FOOTPRINT OF TRASH NETS.
2. THE TRASH NET SUPPORT RING SHALL BE MADE FROM #3 BAR. EMBEDDED IN CONCRETE PAD.

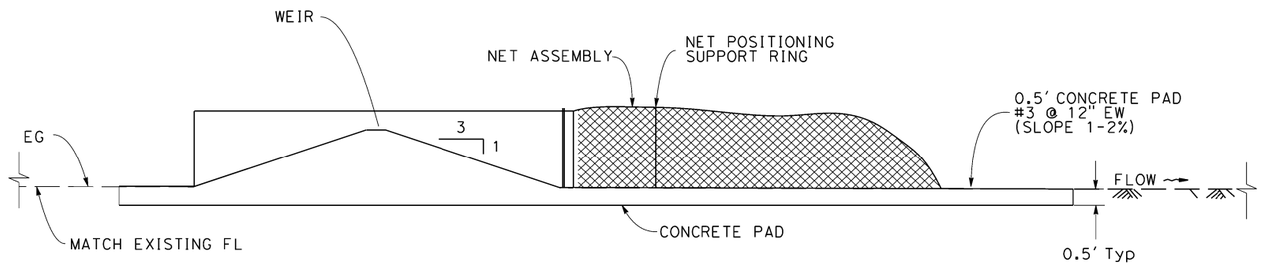

SECTION A-A

TRASH NET DIMENSION TABLE

TRASH NET LENGTH L	Wb	WEIR H
20'	1.83'	1.33'

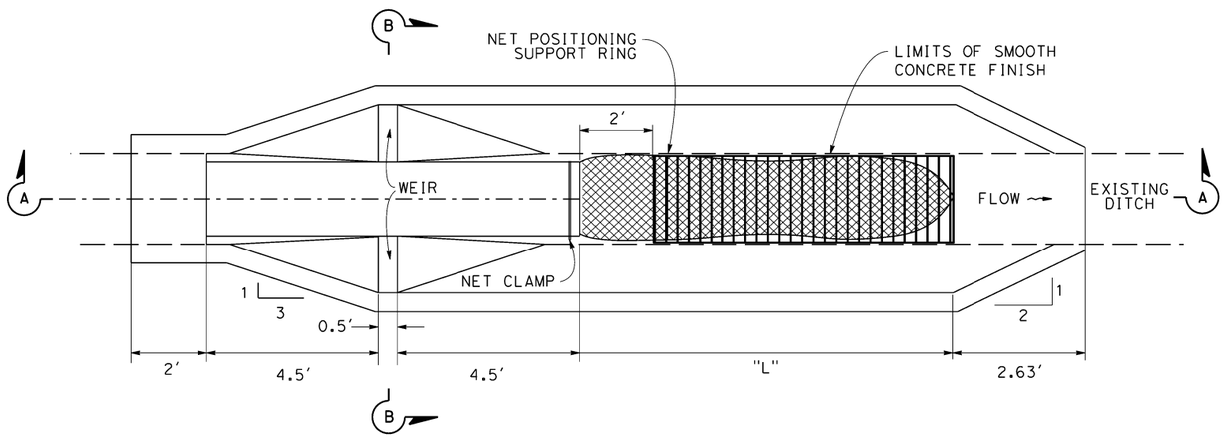

PLAN

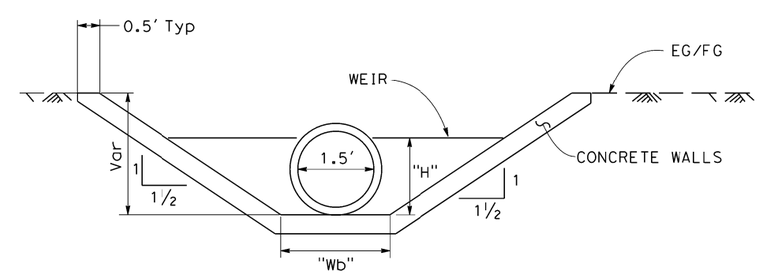

SECTION B-B

TRASH NET BMP

IN OPEN CHANNEL

DRAINAGE DETAILS

NO SCALE

DD-11

REVISED BY	DATE REVISED
J.R.	02/07/22

CALCULATED-DESIGNED BY: JESUS RICO
CHECKED BY: CARL GIBSON III
CONSULTANT FUNCTIONAL SUPERVISOR: CARL GIBSON III

STATE OF CALIFORNIA - DEPARTMENT OF TRANSPORTATION

Caltrans

X:\SR 37_F\

LAST REVISION 00-00-00 | DATE PLOTTED => 2/15/2022 | TIME PLOTTED => 5:16:08 PM

Dist	COUNTY	ROUTE	POST MILES TOTAL PROJECT	SHEET No.	TOTAL SHEETS
04	Sol	37	10.9		

REGISTERED CIVIL ENGINEER DATE

PLANS APPROVAL DATE

REGISTERED PROFESSIONAL ENGINEER No. Exp. CIVIL STATE OF CALIFORNIA

THE STATE OF CALIFORNIA OR ITS OFFICERS OR AGENTS SHALL NOT BE RESPONSIBLE FOR THE ACCURACY OR COMPLETENESS OF SCANNED COPIES OF THIS PLAN SHEET.

WMH CORPORATION
11070 WHITE ROCK RD
SUITE 140
RANCHO CORDOVA
CA 95670

SOLANO TRANSPORTATION AUTHORITY
1 HARBOR CENTER
SUITE 130
SUISUN CITY, CA 94585

PRELIMINARY PLANS SUBJECT TO REVISION

NOTES:

1. FOR INFORMATION NOT SHOWN, SEE STANDARD PLANS.
2. DISTANCE FROM BACK OF WALK OR DIKE.
3. FOR DISTANCE, SEE TYPICAL SECTIONS.

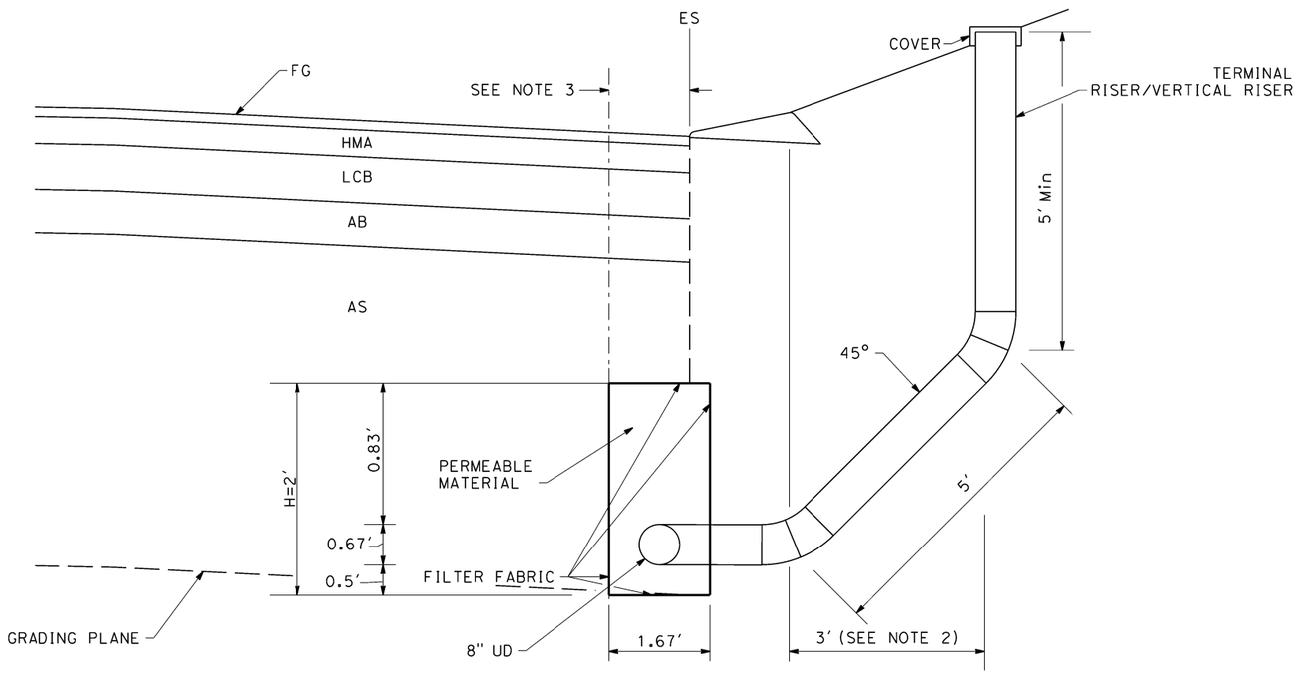

UNDERDRAIN VERTICAL RISER

27 y z

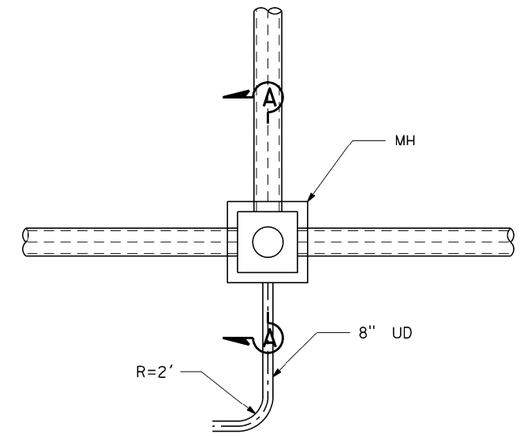

UNDERDRAIN CONNECTION TO MANHOLE

12 d 19 f 20 a 21 e
22 f 40 h 47 a 50 a 51 a

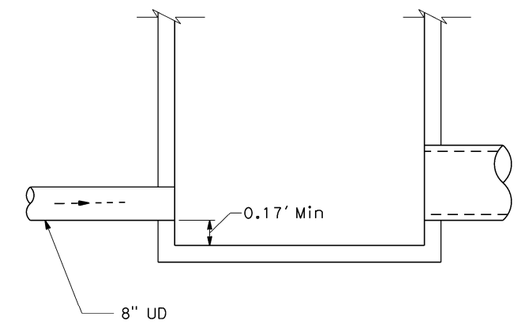

SECTION A-A

DRAINAGE DETAILS

NO SCALE

DD-12

JESUS RICO	CARL GIBSON III	J.R.	02/07/22
CALCULATED-DESIGNED BY	CHECKED BY	REVISED BY	DATE REVISED

CONSULTANT FUNCTIONAL SUPERVISOR: CARL GIBSON III

STATE OF CALIFORNIA - DEPARTMENT OF TRANSPORTATION

Caltrans

X:\SR 37_F1

LAST REVISION 00-00-00 | DATE PLOTTED => 8/31/2022 | TIME PLOTTED => 12:33:40 AM

Dist	COUNTY	ROUTE	POST MILES TOTAL PROJECT	SHEET No.	TOTAL SHEETS
04	Sol	37	10.9		

REGISTERED CIVIL ENGINEER DATE

PLANS APPROVAL DATE

REGISTERED PROFESSIONAL ENGINEER No. Exp. CIVIL STATE OF CALIFORNIA

THE STATE OF CALIFORNIA OR ITS OFFICERS OR AGENTS SHALL NOT BE RESPONSIBLE FOR THE ACCURACY OR COMPLETENESS OF SCANNED COPIES OF THIS PLAN SHEET.

WMH CORPORATION
11070 WHITE ROCK RD
SUITE 140
RANCHO CORDOVA
CA 95670

SOLANO TRANSPORTATION AUTHORITY
1 HARBOR CENTER
SUITE 130
SUISUN CITY, CA 94585

PRELIMINARY PLANS SUBJECT TO REVISION

NOTES:

1. CONNECT UNDERDRAIN TO DRAINAGE INLET/MANHOLE.
2. CONNECT EDGE DRAIN TO DRAINAGE INLET/MANHOLE.
3. CONNECT UNDERDRAIN TO EXISTING UNDERDRAIN.
4. CONNECT EDGE DRAIN TO EXISTING EDGE DRAIN.

LEGEND:

UD UNDERDRAIN

EDGE DRAIN

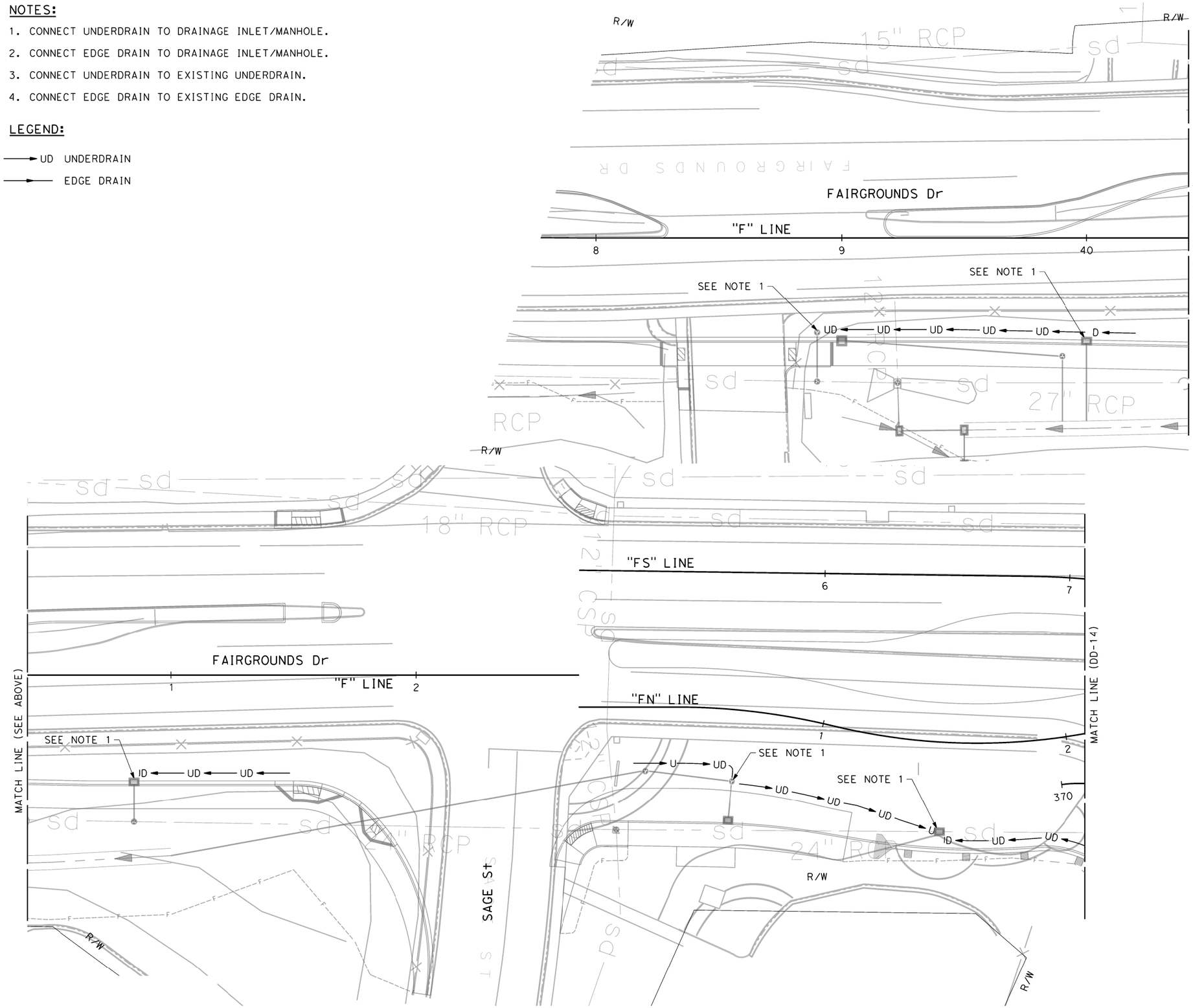

DRAINAGE DETAILS

SCALE 1"=20'

DD-13

REVISED BY	DATE REVISED
J.R.	02/07/22

CALCULATED-DESIGNED BY: JESUS RICO
CHECKED BY: CARL GIBSON III
CONSULTANT FUNCTIONAL SUPERVISOR: CARL GIBSON III

STATE OF CALIFORNIA - DEPARTMENT OF TRANSPORTATION

LAST REVISION 00-00-00 | DATE PLOTTED => 8/31/2022 | TIME PLOTTED => 12:34:33 AM

X:\SR 37_F,

Dist	COUNTY	ROUTE	POST MILES TOTAL PROJECT	SHEET No.	TOTAL SHEETS
04	Sol	37	10.9		

REGISTERED CIVIL ENGINEER DATE

PLANS APPROVAL DATE

REGISTERED PROFESSIONAL ENGINEER No. Exp. CIVIL STATE OF CALIFORNIA

THE STATE OF CALIFORNIA OR ITS OFFICERS OR AGENTS SHALL NOT BE RESPONSIBLE FOR THE ACCURACY OR COMPLETENESS OF SCANNED COPIES OF THIS PLAN SHEET.

WMH CORPORATION
11070 WHITE ROCK RD
SUITE 140
RANCHO CORDOVA
CA 95670

SOLANO TRANSPORTATION AUTHORITY
1 HARBOR CENTER
SUITE 130
SUISUN CITY, CA 94585

PRELIMINARY PLANS SUBJECT TO REVISION

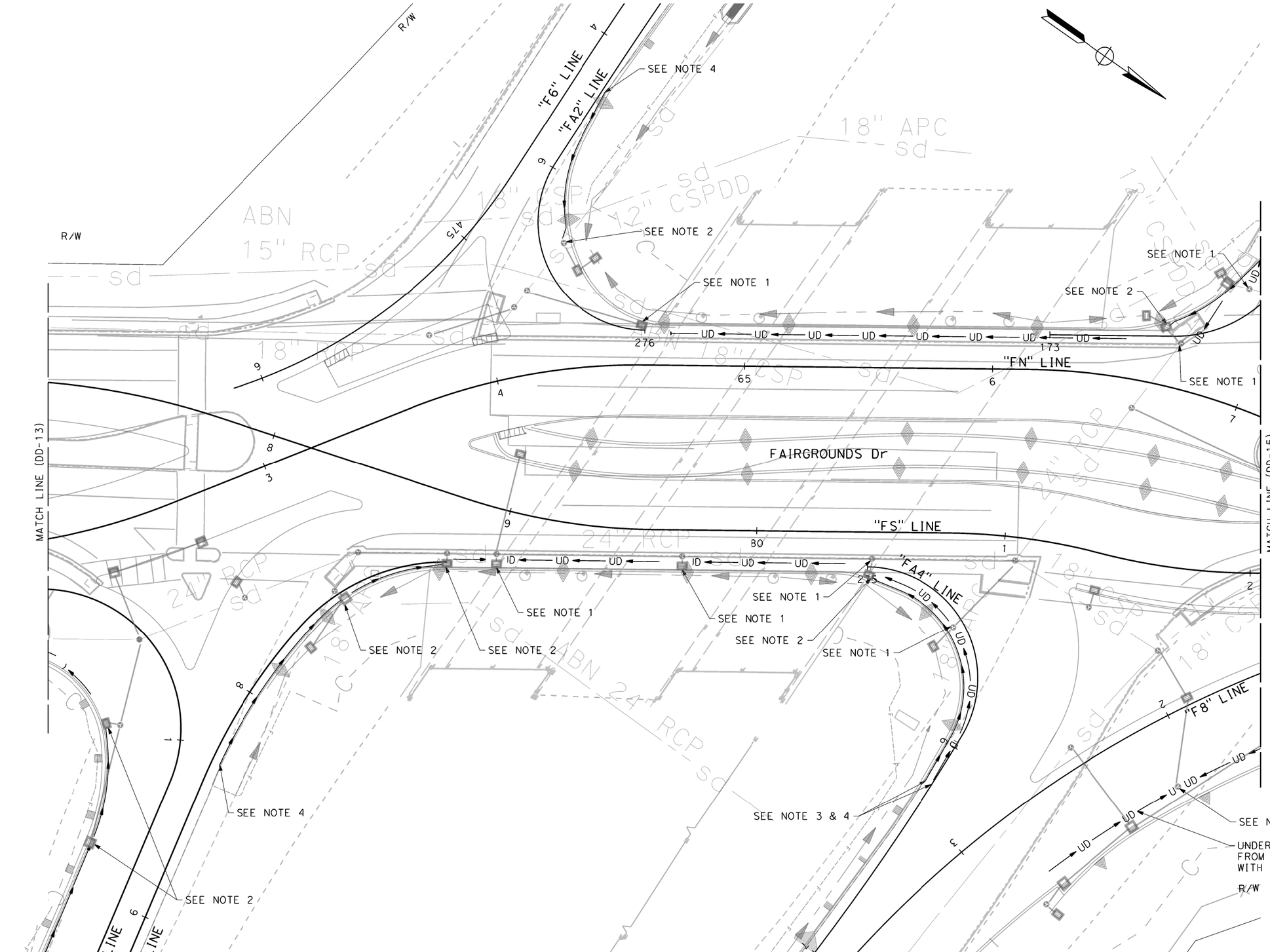

FOR NOTES, ABBREVIATIONS AND LEGEND, SEE SHEET DD-13

DRAINAGE DETAILS

SCALE 1"=20'

DD-14

REVISED BY	DATE REVISED
J.R.	02/07/22

JESUS RICO — CARL GIBSON III — CALCULATED-DESIGNED BY

CARL GIBSON III — CHECKED BY — CONSULTANT FUNCTIONAL SUPERVISOR

STATE OF CALIFORNIA - DEPARTMENT OF TRANSPORTATION — Caltrans

X:\SR 37_F\

LAST REVISION 00-00-00 — DATE PLOTTED => 9/1/2022 — TIME PLOTTED => 12:34:41 AM

BORDER LAST REVISED 7/2/2010 | USERNAME => jrico | DGN FILE => 044A4414ic014.dgn | RELATIVE BORDER SCALE IS IN INCHES 0 1 2 3 | UNIT 0738 | PROJECT NUMBER & PHASE 04000205841

Dist	COUNTY	ROUTE	POST MILES TOTAL PROJECT	SHEET No.	TOTAL SHEETS
04	Sol	37	10.9		

REGISTERED CIVIL ENGINEER DATE

PLANS APPROVAL DATE

REGISTERED PROFESSIONAL ENGINEER No. Exp. CIVIL STATE OF CALIFORNIA

THE STATE OF CALIFORNIA OR ITS OFFICERS OR AGENTS SHALL NOT BE RESPONSIBLE FOR THE ACCURACY OR COMPLETENESS OF SCANNED COPIES OF THIS PLAN SHEET.

WMH CORPORATION
11070 WHITE ROCK RD
SUITE 140
RANCHO CORDOVA
CA 95670

SOLANO TRANSPORATION AUTHORITY
1 HARBOR CENTER
SUITE 130
SUISUN CITY, CA 94585

PRELIMINARY PLANS SUBJECT TO REVISION

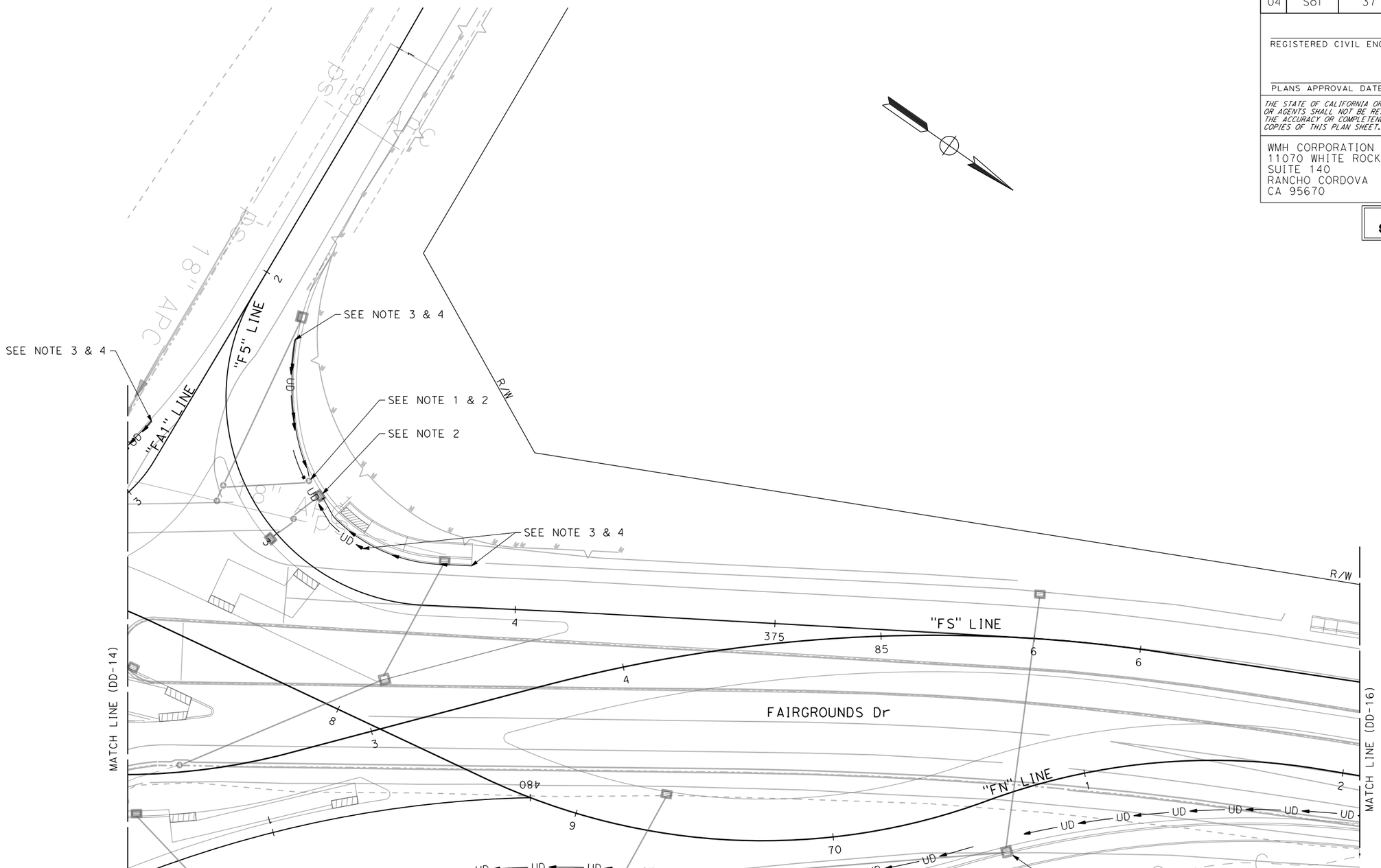

DRAINAGE DETAILS

SCALE 1"=20'

DD-15

REVISED BY	DATE REVISED
J.R.	02/07/22

JESUS RICO — CALCULATED-DESIGNED BY
CARL GIBSON III — CHECKED BY
CARL GIBSON III — CONSULTANT FUNCTIONAL SUPERVISOR

STATE OF CALIFORNIA - DEPARTMENT OF TRANSPORTATION

X:\SR 37_FAIRGROUNDS DRIVE\000_CAD\Sheets\017-Drainage\IC-Details\044A4414ic015.dgn

LAST REVISION 00-00-00 | DATE PLOTTED => 2/16/2022 | TIME PLOTTED => 9:55:37 AM

BORDER LAST REVISED 7/2/2010 | USERNAME => jvaldivia | DGN FILE => 044A4414ic015.dgn | RELATIVE BORDER SCALE IS IN INCHES 0 1 2 3 | UNIT 0738 | PROJECT NUMBER & PHASE 04000205841

Dist	COUNTY	ROUTE	POST MILES TOTAL PROJECT	SHEET No.	TOTAL SHEETS
04	Sol	37	10.9		

REGISTERED CIVIL ENGINEER DATE

PLANS APPROVAL DATE

REGISTERED PROFESSIONAL ENGINEER
No.
Exp.
CIVIL
STATE OF CALIFORNIA

THE STATE OF CALIFORNIA OR ITS OFFICERS OR AGENTS SHALL NOT BE RESPONSIBLE FOR THE ACCURACY OR COMPLETENESS OF SCANNED COPIES OF THIS PLAN SHEET.

WMH CORPORATION
11070 WHITE ROCK RD
SUITE 140
RANCHO CORDOVA
CA 95670

SOLANO TRANSPORATION
AUTHORITY
1 HARBOR CENTER
SUITE 130
SUISUN CITY, CA 94585

PRELIMINARY PLANS SUBJECT TO REVISION

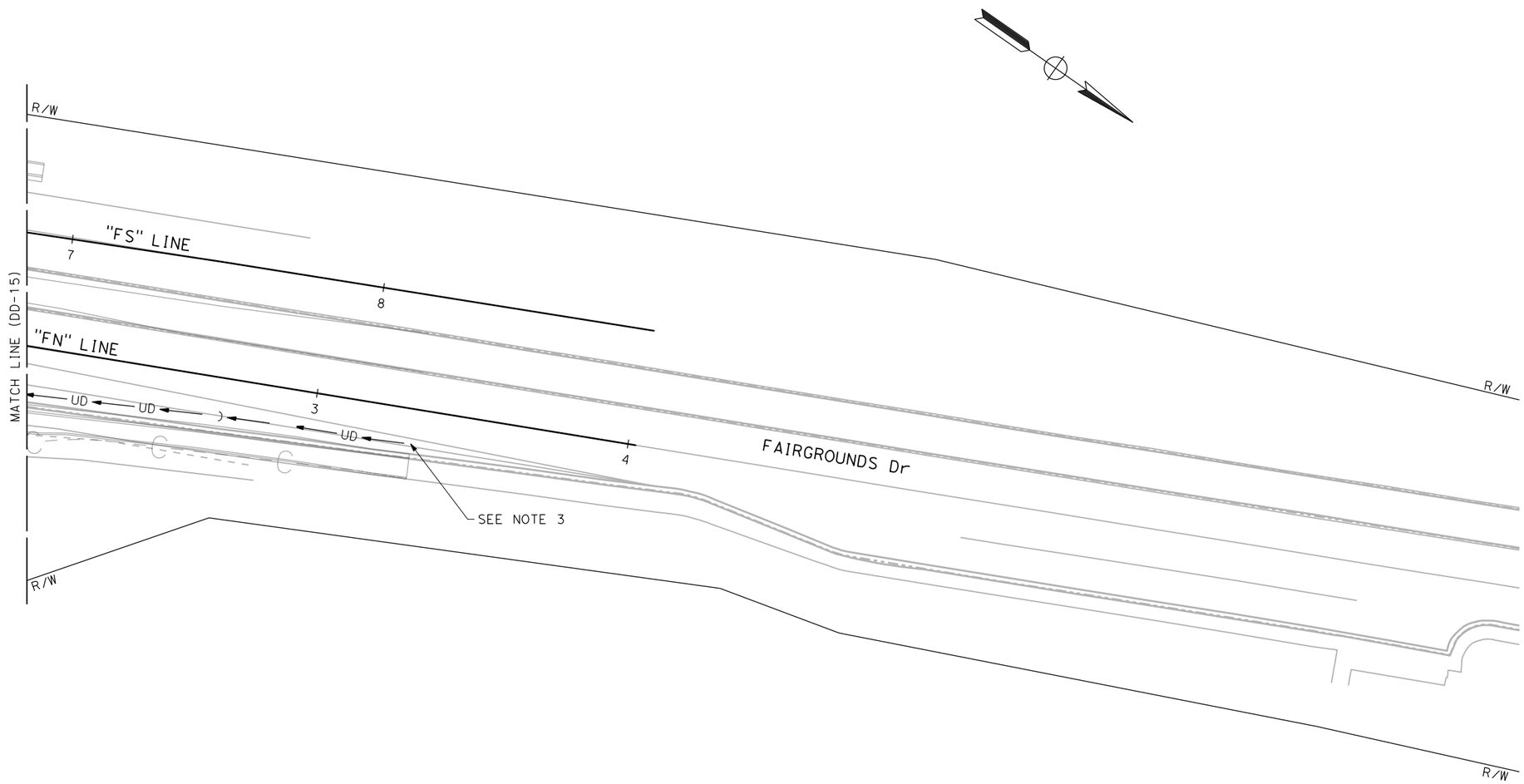

DRAINAGE DETAILS

SCALE 1"=20'

DD-16

REVISED BY	DATE REVISED
J.R.	02/07/22

JESUS RICO	CARL GIBSON III
CALCULATED-DESIGNED BY	CHECKED BY
CARL GIBSON III	
CONSULTANT FUNCTIONAL SUPERVISOR	

STATE OF CALIFORNIA - DEPARTMENT OF TRANSPORTATION

Caltrans

X:\SR 37_FAIRGROUNDS DRIVE\000_CAD\Sheets\017-Drainage\IC-Details\044A4414ic016.dgn

LAST REVISION 00-00-00 | DATE PLOTTED => 2/16/2022 | TIME PLOTTED => 9:55:39 AM

BORDER LAST REVISED 7/2/2010 | USERNAME => jvaldivia | DGN FILE => 044A4414ic016.dgn | RELATIVE BORDER SCALE IS IN INCHES 0 1 2 3 | UNIT 0738 | PROJECT NUMBER & PHASE 04000205841

Dist	COUNTY	ROUTE	POST MILES TOTAL PROJECT	SHEET No.	TOTAL SHEETS
04	Sol	37	10.9		

REGISTERED CIVIL ENGINEER DATE

PLANS APPROVAL DATE

REGISTERED PROFESSIONAL ENGINEER No. Exp. CIVIL STATE OF CALIFORNIA

THE STATE OF CALIFORNIA OR ITS OFFICERS OR AGENTS SHALL NOT BE RESPONSIBLE FOR THE ACCURACY OR COMPLETENESS OF SCANNED COPIES OF THIS PLAN SHEET.

WMH CORPORATION
11070 WHITE ROCK RD
SUITE 140
RANCHO CORDOVA
CA 95670

SOLANO TRANSPORATION AUTHORITY
1 HARBOR CENTER
SUITE 130
SUISUN CITY, CA 94585

PRELIMINARY PLANS SUBJECT TO REVISION

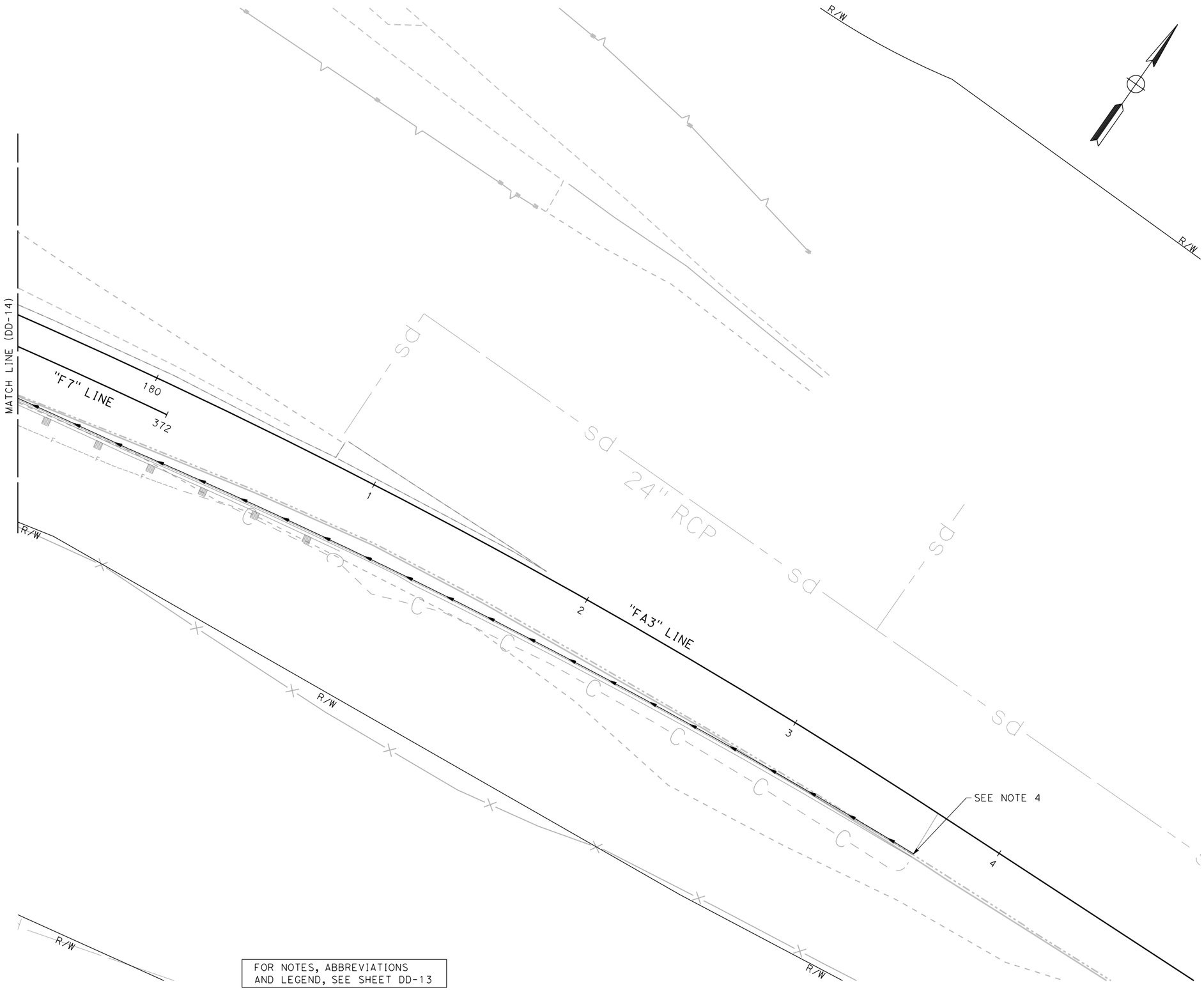

FOR NOTES, ABBREVIATIONS AND LEGEND, SEE SHEET DD-13

DRAINAGE DETAILS

SCALE 1"=20'

DD-17

REVISED BY	DATE REVISED
J.R.	02/07/22

CALCULATED-DESIGNED BY	JESUS RICO
CHECKED BY	CARL GIBSON III
SUPERVISOR	CARL GIBSON III
CONSULTANT FUNCTIONAL	

STATE OF CALIFORNIA - DEPARTMENT OF TRANSPORTATION

Caltrans

X:\SR 37_FAIRGROUNDS DRIVE\000_CAD\Sheets\017-Drainage\IC-Details\044A4414ic017.dgn

LAST REVISION 00-00-00

DATE PLOTTED => 2/16/2022
TIME PLOTTED => 9:55:42 AM

BORDER LAST REVISED 7/2/2010

USERNAME => jvaldivia
DGN FILE => 044A4414ic017.dgn

RELATIVE BORDER SCALE IS IN INCHES 0 1 2 3

UNIT 0738

PROJECT NUMBER & PHASE 04000205841

Dist	COUNTY	ROUTE	POST MILES TOTAL PROJECT	SHEET No.	TOTAL SHEETS
04	Sol	37	10.9		

REGISTERED CIVIL ENGINEER DATE

PLANS APPROVAL DATE

REGISTERED PROFESSIONAL ENGINEER No. Exp. CIVIL STATE OF CALIFORNIA

THE STATE OF CALIFORNIA OR ITS OFFICERS OR AGENTS SHALL NOT BE RESPONSIBLE FOR THE ACCURACY OR COMPLETENESS OF SCANNED COPIES OF THIS PLAN SHEET.

WMH CORPORATION
11070 WHITE ROCK RD
SUITE 140
RANCHO CORDOVA
CA 95670

SOLANO TRANSPORTATION AUTHORITY
1 HARBOR CENTER
SUITE 130
SUISUN CITY, CA 94585

PRELIMINARY PLANS SUBJECT TO REVISION

NOTES:

1. ALL INLET FRAMES SHALL BE RECTANGULAR.

APC ALLOWABLE PIPE MATERIAL AND PROTECTION

DESIGNATION	RCP	PLASTIC		CSP
		PVC	HDPE	
		CORRUGATED	CORRUGATED TYPE (S)	Bit Ctd THICKNESS
12" APC	YES	YES	YES	0.052"
18" APC	YES	YES	YES	0.052"

ABBREVIATIONS:

S STANDARD

DRAINAGE QUANTITIES

DRAINAGE PLAN SHEET	DRAINAGE SYSTEM ⬡	DRAINAGE UNIT No. ◯	STATION		OFFSET	Misc IRON AND STEEL	HEGHT OF INLET "H" (N)	MINOR CONCRETE (MINOR STRUCTURE)	INLET DEPRESSION	DRAINAGE INLET MARKER	CULVERT SLURRY - CEMENT BACKFILL	MINOR CONCRETE (MISC CONSTRUCTION)	REMOVE PIPE	ABANDON CULVERT	REMOVE INLET	6" PERFORATED PLASTIC PIPE UNDERDRAIN	18" ALTERNATIVE PIPE CULVERT	18" CONCRETE FLARED END SECTION	12" CONCRETE FLARED END SECTION	12" ALTERNATIVE PIPE CULVERT	PIPE JOINT CLASSIFICATION (N)	CURB CUT	MODIFY INLET TO MANHOLE	ADJUST MANHOLE TO GRADE	36" PRECAST CONCRETE MANHOLE	48" PRECAST CONCRETE MANHOLE	60" PRECAST CONCRETE MANHOLE	72" PRECAST CONCRETE MANHOLE	CAST-IN-PLACE REINFORCED CONCRETE JUNCTION STRUCTURE	ROCK SLOPE PROTECTION (FACING, METHOD B)	ROCK SLOPE PROTECTION FABRIC (CLASS 8)	DESCRIPTION
						LB	FT	CY	EA	EA	CY	CY	LF	LF	EA	LF	LF	EA	EA	LF		EA	EA	EA	LF	LF	LF	LF	EA	CY	SQYD	
D-1	1	a	"F"	24+00	Rt	239	2.5	0.92		1																						G3 DI GRATE TYPE 24-12X
		b															17.7				DD											18" APC
		c	"F"	24+00	Rt													1														4.6' CFES
		d																												1.88	7.44	RSP
	2	a	"F"	24+50	Rt	326	2.5	0.84		1																						G1 DI GRATE TYPE 24-12
		b															24.0				S											18" APC
		c	"F"	24+50	Rt	239	4.7	1.41	1	1																						G3 DI GRATE TYPE 24-12X
		d															8.8				S											18" APC
		e	"F"	24+49.30	Rt	435	5.2																		5.21							MH
		f															149.4				S											18" APC
		g	"F"	26+00	Rt	435	7.0																		7.03							MH
		h															41.8				S											18" APC
		i	"F"	26+00	Rt	326	2.0	0.73		1																						G1 DI GRATE TYPE 24-12
		j															196.0				S											18" APC
		k	"F"	27+98.97	Rt	435	7.8																		7.82							MH
		l															57.7				S											18" APC
		m	"F"	28+00	Rt	326	3.9	1.15		1																						G1 DI GRATE TYPE 24-12
		n															48.7				S											18" APC
		o	"F"	28+50.61	Rt	435	8.0																		8.04							MH
		p											101.4																			REMOVE PIPE
		q															99.9				S											18" APC
		r	"F"	24+50	Rt					1									1													2.3' CFES
		s																		13.0	S											12" APC
		t	"F"	28+50.61	Rt										1																	REMOVE INLET
	3	a	"F"	25+00	Rt	239	2.5	0.92		1																						G3 DI GRATE TYPE 24-12X
		b															17.6				DD											18" APC
		c	"F"	24+98.22	Rt													1														4.6' CFES
		d																												1.88	7.44	RSP
D-2	4	a	"F"	29+16.46	Rt	400				1												1										CURB CUT
		b						0.38																								CONCRETE CHANNEL
SUBTOTAL DQ-1						3,835		6.3	1	8			101		1		662	2	1	13		1			28.1					3.8	14.9	

(N) - NOT A SEPARATE BID ITEM

DRAINAGE QUANTITIES

DQ-1

STATE OF CALIFORNIA - DEPARTMENT OF TRANSPORTATION

Caltrans

CARL GIBSON III — CONSULTANT FUNCTIONAL SUPERVISOR

JESUS RICO — CALCULATED-DESIGNED BY

CARL GIBSON III — CHECKED BY

J.R. — REVISED BY

02/07/22 — DATE REVISED

X:\SR 37_FAIRGROUNDS DRIVE\000_CAD\Sheets\017-Drainage\ID-Quantities\044A4414id001.dgn

LAST REVISION 00-00-00

DATE PLOTTED => 9/1/2022
TIME PLOTTED => 2:18:11 PM

Dist	COUNTY	ROUTE	POST MILES TOTAL PROJECT	SHEET No.	TOTAL SHEETS
04	Sol	37	10.9		

REGISTERED CIVIL ENGINEER DATE

PLANS APPROVAL DATE

REGISTERED PROFESSIONAL ENGINEER No. Exp. CIVIL STATE OF CALIFORNIA

THE STATE OF CALIFORNIA OR ITS OFFICERS OR AGENTS SHALL NOT BE RESPONSIBLE FOR THE ACCURACY OR COMPLETENESS OF SCANNED COPIES OF THIS PLAN SHEET.

WMH CORPORATION
11070 WHITE ROCK RD
SUITE 140
RANCHO CORDOVA
CA 95670

SOLANO TRANSPORTATION AUTHORITY
1 HARBOR CENTER
SUITE 130
SUISUN CITY, CA 94585

PRELIMINARY PLANS SUBJECT TO REVISION

DRAINAGE QUANTITIES

DRAINAGE PLAN SHEET	DRAINAGE SYSTEM ⬡	DRAINAGE UNIT No. ◯	STATION		OFFSET	Misc IRON AND STEEL	HEGHT OF INLET "H" (N)	MINOR CONCRETE (MINOR STRUCTURE)	INLET DEPRESSION	DRAINAGE INLET MARKER	CULVERT SLURRY - CEMENT BACKFILL	MINOR CONCRETE (MISC CONSTRUCTION)	REMOVE PIPE	ABANDON CULVERT	REMOVE INLET	6" PERFORATED PLASTIC PIPE UNDERDRAIN	18" ALTERNATIVE PIPE CULVERT	18" CONCRETE FLARED END SECTION	12" CONCRETE FLARED END SECTION	12" ALTERNATIVE PIPE CULVERT	PIPE JOINT CLASSIFICATION (N)	CURB CUT	MODIFY INLET TO MANHOLE	ADJUST MANHOLE TO GRADE	36" PRECAST CONCRETE MANHOLE	48" PRECAST CONCRETE MANHOLE	60" PRECAST CONCRETE MANHOLE	72" PRECAST CONCRETE MANHOLE	CAST-IN-PLACE REINFORCED CONCRETE JUNCTION STRUCTURE	ROCK SLOPE PROTECTION (FACING, METHOD B)	ROCK SLOPE PROTECTION FABRIC (CLASS 8)	DESCRIPTION
						LB	FT	CY	EA	EA	CY	CY	LF	LF	EA	LF	LF	EA	EA	LF		EA	EA	EA	LF	LF	LF	LF	EA	CY	SQYD	
		c																												3.45	12.16	RSP
	5	a	"F"	31+00	R†	326	3.6	1.08		1																						G1 DI GRATE TYPE 24-12
		b															19.8				S											18" APC
		c	"F"	31+00	R†	435	4.8																		4.76							MH
		d															47.6				S											18" APC
		e	"F"	34+01.36	R†	435	6.3																		6.33							MH
		f															26.7				S											18" APC
		g	"F"	34+00	R†	435	4.8																		4.82							MH
		h															50.5				S											18" APC
		i	"F"	33+50	R†	326	4.6	1.31		1																						G1 DI GRATE TYPE 24-12
		j															4.7				S											18" APC
		k	"F"	34+00	R†	326	2.7	0.88		1																						G1 DI GRATE TYPE 24-12
		l															23.8				S											18" APC
		m	"F"	34+27.24	R†	435	8.5																						1			JUNCTION STRUCTURE
		n	"F"	32+51.57	R†										1																	REMOVE INLET
D-2		o	"F"	32+51.57	R†									82																		ABANDON CULVERT L=82.4'
		p	"F"	31+50	R†	435	4.8																		4.75							MH
		q															255.2				S											18" APC
		r															1.5				S											18" APC
		s	"F"	31+50	R†	326	4.5	1.36		1																						G3 DI GRATE TYPE 24-12
	6	a	"F"	32+50	R†	400				1												1										CURB CUT
		b						0.34																								CONCRETE CHANNEL
		c																												3.40	12.01	RSP
	7	a	"F"		R†	2,728		8.65																								CULVERT EXTENSION
		b	"F"		R†								8																			REMOVE PIPE
	8	a	"F"	36+00	R†	400				1												1										CURB CUT
		b						0.38																								CONCRETE CHANNEL
		c																												3.44	12.11	RSP
	9	a	"F"	37+00	R†	326	2.5	0.84		1																						G1 DI GRATE TYPE 24-12
		b															8.5				S											18" APC
SUBTOTAL DQ-2						7,333		14.8		7			8	82	1		438					2			20.7				1	10.3	36.3	

(N) - NOT A SEPARATE BID ITEM

DRAINAGE QUANTITIES

DQ-2

STATE OF CALIFORNIA - DEPARTMENT OF TRANSPORTATION

Caltrans

CONSULTANT FUNCTIONAL SUPERVISOR: CARL GIBSON III

CALCULATED-DESIGNED BY: JESUS RICO

CHECKED BY: CARL GIBSON III

REVISED BY: J.R.

DATE REVISED: 02/07/22

X:\SR 37_FAIRGROUNDS DRIVE\000_CAD\Sheets\017-Drainage\ID-Quantities\044A4414id002.dgn

LAST REVISION 00-00-00

DATE PLOTTED => 9/1/2022
TIME PLOTTED => 2:18:18 PM

Dist	COUNTY	ROUTE	POST MILES TOTAL PROJECT	SHEET No.	TOTAL SHEETS
04	Sol	37	10.9		

REGISTERED CIVIL ENGINEER DATE

PLANS APPROVAL DATE

REGISTERED PROFESSIONAL ENGINEER No. Exp. CIVIL STATE OF CALIFORNIA

THE STATE OF CALIFORNIA OR ITS OFFICERS OR AGENTS SHALL NOT BE RESPONSIBLE FOR THE ACCURACY OR COMPLETENESS OF SCANNED COPIES OF THIS PLAN SHEET.

WMH CORPORATION
11070 WHITE ROCK RD
SUITE 140
RANCHO CORDOVA
CA 95670

SOLANO TRANSPORTATION AUTHORITY
1 HARBOR CENTER
SUITE 130
SUISUN CITY, CA 94585

PRELIMINARY PLANS SUBJECT TO REVISION

DRAINAGE QUANTITIES

DRAINAGE PLAN SHEET	DRAINAGE SYSTEM ⬡	DRAINAGE UNIT No. ◯	STATION		OFFSET	Misc IRON AND STEEL	HEGHT OF INLET "H" (N)	MINOR CONCRETE (MINOR STRUCTURE)	INLET DEPRESSION	DRAINAGE INLET MARKER	CULVERT SLURRY - CEMENT BACKFILL	MINOR CONCRETE (MISC CONSTRUCTION)	REMOVE PIPE	ABANDON CULVERT	REMOVE INLET	6" PERFORATED PLASTIC PIPE UNDERDRAIN	18" ALTERNATIVE PIPE CULVERT	18" CONCRETE FLARED END SECTION	12" CONCRETE FLARED END SECTION	12" ALTERNATIVE PIPE CULVERT	PIPE JOINT CLASSIFICATION (N)	CURB CUT	MODIFY INLET TO MANHOLE	ADJUST MANHOLE TO GRADE	36" PRECAST CONCRETE MANHOLE	48" PRECAST CONCRETE MANHOLE	60" PRECAST CONCRETE MANHOLE	72" PRECAST CONCRETE MANHOLE	CAST-IN-PLACE REINFORCED CONCRETE JUNCTION STRUCTURE	ROCK SLOPE PROTECTION (FACING, METHOD B)	ROCK SLOPE PROTECTION FABRIC (CLASS 8)	DESCRIPTION
						LB	FT	CY	EA	EA	CY	CY	LF	LF	EA	LF	LF	EA	EA	LF		EA	EA	EA	LF	LF	LF	LF	EA	CY	SQYD	
		c	"F"	37+06.96	R†	435	8.7																			8.71						MH
		d	"F"	37+06.96	R†										1																	REMOVE INLET
	10	a	"F"	39+22.75	R†	435	12.3																		12.27							MH
		b															16.6				S											18" APC
		c	"F"	39+23.47	R†	326	4.1	1.20		1																						G1 DI GRATE TYPE 24-12
		d															24.5				S											18" APC
		e	"F"	39+50	R†	326	3.0	0.95		1																						G1 DI GRATE TYPE 24-12
		f															11.3				S											18" APC
		g	"F"	39+50	R†	326	3.3	1.02		1																						G1 DI GRATE TYPE 24-12
D-2		h	"F"	39+21.29	R†								33.3																			REMOVE PIPE
		i	"F"	39+21.29	R†										1																	REMOVE INLET
		j	"F"	39+22.75	R†										1																	REMOVE INLET
	11	a	"F"	40+00	R†	239	3.7	1.18		1																						G3 DI GRATE TYPE 24-12X
		b															20.8				DD											18" APC
		c	"F"	40+00	R†													1														4.6' CFES
		d																												3.73	12.98	RSP
	12	a															190.0				DD											18" APC
		b	"FN"	60+27	R†	435	5.4																		5.44							MH
		c															32.5				S											18" APC
		d	"FN"	60+65	R†	435	4.9																		4.91							MH
D-3		e															13.6				S											18" APC
		f	"FN"	60+65	R†	326	4.8	1.42		1																						G3 DI GRATE TYPE 24-12
		k	"FN"	60+11.15	R†																		1									MODIFY INLET TO MH
		l	"F"	40+39.63	R†																			1								ADJUST MH TO GRADE
D-2		m	"F"	41+00.50	R†													1														4.6' CFES
		n																												1.96	7.68	RSP
	13	a	"FN"	60+15.20	R†	435	3.0																1									MODIFY INLET TO MH
	14	a	"F7"	370+53.99	R†	435	8.1																			8.11						MH
D-3		b															25.7				S											18" APC
		c	"FN"	62+30	R†	239	5.3	2.96		1																						G2 DI GRATE TYPE 24-12X
SUBTOTAL DQ-3						4,392		8.7		6			33		3		335	2					2	1	22.6	16.8				5.7	20.7	

(N) - NOT A SEPARATE BID ITEM

DRAINAGE QUANTITIES

DQ-3

JESUS RICO | REVISED BY | J.R.
CARL GIBSON III | DATE REVISED | 02/07/22

CALCULATED-DESIGNED BY
CHECKED BY

CARL GIBSON III — CONSULTANT FUNCTIONAL SUPERVISOR

STATE OF CALIFORNIA - DEPARTMENT OF TRANSPORTATION

Caltrans

X:\SR 37_FAIRGROUNDS DRIVE\000_CAD\Sheets\017-Drainage\ID-Quantities\044A4414id003.dgn

LAST REVISION 00-00-00 | DATE PLOTTED => 9/1/2022 TIME PLOTTED => 2:18:20 PM

Dist	COUNTY	ROUTE	POST MILES TOTAL PROJECT	SHEET No.	TOTAL SHEETS
04	Sol	37	10.9		

REGISTERED CIVIL ENGINEER DATE

PLANS APPROVAL DATE

REGISTERED PROFESSIONAL ENGINEER No. Exp. CIVIL STATE OF CALIFORNIA

THE STATE OF CALIFORNIA OR ITS OFFICERS OR AGENTS SHALL NOT BE RESPONSIBLE FOR THE ACCURACY OR COMPLETENESS OF SCANNED COPIES OF THIS PLAN SHEET.

WMH CORPORATION
11070 WHITE ROCK RD
SUITE 140
RANCHO CORDOVA
CA 95670

SOLANO TRANSPORTATION AUTHORITY
1 HARBOR CENTER
SUITE 130
SUISUN CITY, CA 94585

PRELIMINARY PLANS SUBJECT TO REVISION

DRAINAGE QUANTITIES

DRAINAGE PLAN SHEET	DRAINAGE SYSTEM ⬡	DRAINAGE UNIT No. ◯	STATION		OFFSET	Misc IRON AND STEEL	HEGHT OF INLET "H" (N)	MINOR CONCRETE (MINOR STRUCTURE)	INLET DEPRESSION	DRAINAGE INLET MARKER	CULVERT SLURRY - CEMENT BACKFILL	MINOR CONCRETE (MISC CONSTRUCTION)	REMOVE PIPE	ABANDON CULVERT	REMOVE INLET	6" PERFORATED PLASTIC PIPE UNDERDRAIN	18" ALTERNATIVE PIPE CULVERT	18" CONCRETE FLARED END SECTION	12" CONCRETE FLARED END SECTION	12" ALTERNATIVE PIPE CULVERT	PIPE JOINT CLASSIFICATION (N)	CURB CUT	MODIFY INLET TO MANHOLE	ADJUST MANHOLE TO GRADE	36" PRECAST CONCRETE MANHOLE	48" PRECAST CONCRETE MANHOLE	60" PRECAST CONCRETE MANHOLE	72" PRECAST CONCRETE MANHOLE	CAST-IN-PLACE REINFORCED CONCRETE JUNCTION STRUCTURE	ROCK SLOPE PROTECTION (FACING, METHOD B)	ROCK SLOPE PROTECTION FABRIC (CLASS 8)	DESCRIPTION
						LB	FT	CY	EA	EA	CY	CY	LF	LF	EA	LF	LF	EA	EA	LF		EA	EA	EA	LF	LF	LF	LF	EA	CY	SQYD	
		d															34.2				S											18" APC
		e	"FN"	62+65	Rt	239	5.6	3.06		1																						G2 DI GRATE TYPE 24-12X
		f	"F7"	370+53.99	Rt										1																	REMOVE INLET
		g															46.0				S											18" APC
		h	"F7"	371+52.45	Rt	326	7.1	3.70		1																						G2 DI GRATE TYPE 24-12
		i															31.9				S											18" APC
		j	"F7"	370+93	Rt	435	6.8																		6.83							MH
		k															3.2				S											18" APC
		l	"F7"	370+91.91	Rt	326	6.5	1.81		1																						G3 DI GRATE TYPE 24-12
	15	a	"FN"	63+79.40	Lt	435	6.1																			6.08						MH
		b															32.1				S											18" APC
		c	"FN"	64+11.92	Lt	435	5.1																			5.06						MH
		d											17																			REMOVE PIPE
		e	"FN"	64+01.68	Lt										1																	REMOVE INLET
		f											27.2																			REMOVE PIPE
D-3	16	a	"FS"	78+46.81	Rt	435	7.1																					7.06				MH
		b	"FS"	78+46.81	Rt										1																	REMOVE INLET
	17	a	"FA2"	276+33.83	Lt	435	4.7																			4.71						MH
		b															8.9				S											18" APC
		c	"FA2"	276+50	Lt	326	3.8	1.20	1	1																						G3 DI GRATE TYPE 24-12
		d															6.5				S											18" APC
		e	"FA2"	276+50	Lt	326	2.5	0.84		1																						G1 DI GRATE TYPE 24-12
		f	"FA2"	276+33.83	Lt								5																			REMOVE PIPE PORTION
	18	a	"FA3"	177+46.95	Rt	435	3.6																		3.55							MH
		b									0.76						2.4				S											18" APC
		c	"FA3"	177+45	Lt	326	3.4	1.12		1																						G3 DI GRATE TYPE 24-12
		d															21.9				S											18" APC
		e	"FA3"	177+70.33	Lt	326	2.5	0.84		1																						G1 DI GRATE TYPE 24-12
		f											23.9																			REMOVE PIPE
		g	"FA3"	177+69.55	Lt										1																	REMOVE INLET
SUBTOTAL DQ-4						4,805		12.6	1	7	0.8		73		4		187								10.4	15.9		7.1				

(N) - NOT A SEPARATE BID ITEM

DRAINAGE QUANTITIES

DQ-4

STATE OF CALIFORNIA - DEPARTMENT OF TRANSPORTATION

Caltrans

CARL GIBSON III — CONSULTANT FUNCTIONAL SUPERVISOR

JESUS RICO — CARL GIBSON III — CALCULATED-DESIGNED BY — CHECKED BY

REVISED BY J.R. — DATE REVISED 02/07/22

X:\SR 37_FAIRGROUNDS DRIVE\000_CAD\Sheets\017-Drainage\ID-Quantities\044A4414id004.dgn

LAST REVISION 00-00-00 — DATE PLOTTED => 9/1/2022 — TIME PLOTTED => 2:18:22 PM

Dist	COUNTY	ROUTE	POST MILES TOTAL PROJECT	SHEET No.	TOTAL SHEETS
04	Sol	37	10.9		

REGISTERED CIVIL ENGINEER DATE

PLANS APPROVAL DATE

REGISTERED PROFESSIONAL ENGINEER No. Exp. CIVIL STATE OF CALIFORNIA

THE STATE OF CALIFORNIA OR ITS OFFICERS OR AGENTS SHALL NOT BE RESPONSIBLE FOR THE ACCURACY OR COMPLETENESS OF SCANNED COPIES OF THIS PLAN SHEET.

WMH CORPORATION
11070 WHITE ROCK RD
SUITE 140
RANCHO CORDOVA
CA 95670

SOLANO TRANSPORTATION AUTHORITY
1 HARBOR CENTER
SUITE 130
SUISUN CITY, CA 94585

PRELIMINARY PLANS SUBJECT TO REVISION

DRAINAGE QUANTITIES

DRAINAGE PLAN SHEET	DRAINAGE SYSTEM ⬡	DRAINAGE UNIT No. ◯	STATION		OFFSET	Misc IRON AND STEEL	HEGHT OF INLET "H" (N)	MINOR CONCRETE (MINOR STRUCTURE)	INLET DEPRESSION	DRAINAGE INLET MARKER	CULVERT SLURRY - CEMENT BACKFILL	MINOR CONCRETE (MISC CONSTRUCTION)	REMOVE PIPE	ABANDON CULVERT	REMOVE INLET	6" PERFORATED PLASTIC PIPE UNDERDRAIN	18" ALTERNATIVE PIPE CULVERT	18" CONCRETE FLARED END SECTION	12" CONCRETE FLARED END SECTION	12" ALTERNATIVE PIPE CULVERT	PIPE JOINT CLASSIFICATION (N)	CURB CUT	MODIFY INLET TO MANHOLE	ADJUST MANHOLE TO GRADE	36" PRECAST CONCRETE MANHOLE	48" PRECAST CONCRETE MANHOLE	60" PRECAST CONCRETE MANHOLE	72" PRECAST CONCRETE MANHOLE	CAST-IN-PLACE REINFORCED CONCRETE JUNCTION STRUCTURE	ROCK SLOPE PROTECTION (FACING, METHOD B)	ROCK SLOPE PROTECTION FABRIC (CLASS 8)	DESCRIPTION
						LB	FT	CY	EA	EA	CY	CY	LF	LF	EA	LF	LF	EA	EA	LF		EA	EA	EA	LF	LF	LF	LF	EA	CY	SQYD	
D-3	19	a	"FS"	81+67.62	R†	435	4.8																		4.76							MH
		b	"FS"	81+67.62	R†										1																	REMOVE INLET
		c															19.8				S											18" APC
		d	"F8"	481+90	R†	326	4.5	1.37	1	1																						G3 DI GRATE TYPE 24-12
		e															33.9				S											18" APC
		f	"F8"	482+10	L†	435	4.7																		4.70							MH
	20	a	"FS"	81+46.38	R†	435	6.1																		6.11							MH
		b									1.08						4.2				S											18" APC
		c	"FS"	81+44.67	R†	326	2.8	0.98	1	1																						G3 DI GRATE TYPE 24-12
		d	"FS"	81+46.38	R†								3																			REMOVE PIPE PORTION
	21	a	"FA1"	173+49.90	R†	326	3.4	1.03		1																						G1 DI GRATE TYPE 24-12
		b															7.5				S											18" APC
		c	"FA1"	173+42.40	R†	326	3.1	1.05	1	1																						G3 DI GRATE TYPE 24-12
		d									1.99						6.5				S											18" APC
		e	"FA1"	173+36.03	L†	435	6.4																		6.41							MH
		f	"FA1"	173+36.03	L†								3																			REMOVE PIPE PORTION
	22	a	"FA4"	275+50.30	R†	326	4.2	1.22		1																						G1 DI GRATE TYPE 24-12
		b															8.7				S											18" APC
		c	"FS"	81+05.19	R†	435	6.5																				6.54					MH
		d	"FS"	81+05.19	R†										1																	REMOVE INLET
		e															32.9				S											18" APC
		f	"FA4"	275+46.31	R†	435	5.6																		5.56							MH
	23	a	"FA1"	173+06.90	R†	326	4.7	1.32		1																						G1 DI GRATE TYPE 24-12
		b															2.5				S											18" APC
		c	"FA1"	173+05.96	R†	326	6.6	3.46		1																						G2 DI GRATE TYPE 24-12
		d											6																			REMOVE PIPE
		e	"FA1"	173+05.96	R†										1																	REMOVE INLET
	24	a	"FN"	66+58.53	R†	435	6.9																		6.85							MH
		b															56.7				S											18" APC
		c	"FN"	67+21.78	R†	239	3.9	1.22		1																						G3 DI GRATE TYPE 24-12X
SUBTOTAL DQ-5						5,566		11.7	3	8	3.1		12		3		173								34.4		6.5					

(N) - NOT A SEPARATE BID ITEM

DRAINAGE QUANTITIES

DQ-5

REVISED BY	DATE REVISED
J.R.	02/07/22

JESUS RICO — CALCULATED-DESIGNED BY
CARL GIBSON III — CHECKED BY
CARL GIBSON III — CONSULTANT FUNCTIONAL SUPERVISOR

STATE OF CALIFORNIA - DEPARTMENT OF TRANSPORTATION

X:\SR 37_FAIRGROUNDS DRIVE\000_CAD\Sheets\017-Drainage\ID-Quantities\044A4414id005.dgn

LAST REVISION 00-00-00 | DATE PLOTTED => 9/1/2022 | TIME PLOTTED => 2:18:26 PM

Dist	COUNTY	ROUTE	POST MILES TOTAL PROJECT	SHEET No.	TOTAL SHEETS
04	Sol	37	10.9		

REGISTERED CIVIL ENGINEER DATE

PLANS APPROVAL DATE

REGISTERED PROFESSIONAL ENGINEER No. Exp. CIVIL STATE OF CALIFORNIA

THE STATE OF CALIFORNIA OR ITS OFFICERS OR AGENTS SHALL NOT BE RESPONSIBLE FOR THE ACCURACY OR COMPLETENESS OF SCANNED COPIES OF THIS PLAN SHEET.

WMH CORPORATION
11070 WHITE ROCK RD
SUITE 140
RANCHO CORDOVA
CA 95670

SOLANO TRANSPORTATION AUTHORITY
1 HARBOR CENTER
SUITE 130
SUISUN CITY, CA 94585

PRELIMINARY PLANS SUBJECT TO REVISION

DRAINAGE QUANTITIES

DRAINAGE PLAN SHEET	DRAINAGE SYSTEM ⬡	DRAINAGE UNIT No. ◯	STATION		OFFSET	Misc IRON AND STEEL	HEGHT OF INLET "H" (N)	MINOR CONCRETE (MINOR STRUCTURE)	INLET DEPRESSION	DRAINAGE INLET MARKER	CULVERT SLURRY - CEMENT BACKFILL	MINOR CONCRETE (MISC CONSTRUCTION)	REMOVE PIPE	ABANDON CULVERT	REMOVE INLET	6" PERFORATED PLASTIC PIPE UNDERDRAIN	18" ALTERNATIVE PIPE CULVERT	18" CONCRETE FLARED END SECTION	12" CONCRETE FLARED END SECTION	12" ALTERNATIVE PIPE CULVERT	PIPE JOINT CLASSIFICATION (N)	CURB CUT	MODIFY INLET TO MANHOLE	ADJUST MANHOLE TO GRADE	36" PRECAST CONCRETE MANHOLE	48" PRECAST CONCRETE MANHOLE	60" PRECAST CONCRETE MANHOLE	72" PRECAST CONCRETE MANHOLE	CAST-IN-PLACE REINFORCED CONCRETE JUNCTION STRUCTURE	ROCK SLOPE PROTECTION (FACING, METHOD B)	ROCK SLOPE PROTECTION FABRIC (CLASS 8)	DESCRIPTION
						LB	FT	CY	EA	EA	CY	CY	LF	LF	EA	LF	LF	EA	EA	LF		EA	EA	EA	LF	LF	LF	LF	EA	CY	SQYD	
		d	"FN"	66+58.53	R†								3																			REMOVE PIPE PORTION
	25	a	"FS"	81+40.56	R†	326	2.5	0.92		1																						G3 DI GRATE TYPE 24-12
D-3		b															4.9				S											18" APC
		c	"FS"	81+40.00	R†	435	5.5																		5.51							MH
		d	"FS"	81+40.00	R†								3																			REMOVE PIPE PORTION
	26	a	"F"	39+00	R†	239	2.5	1.79		1																						G2 DI GRATE TYPE 24-12X
		b															90.5				S											18" APC
D-2		c	"F"	39+90.00	R†	435	6.1																		6.05							MH
		d															19.7				DD											18" APC
		e	"F"	39+90.00	R†													1														4.6' CFES
		f																												2.02	7.87	RSP
	27	a	"F8"	482+40.07	R†	435	4.1																		4.12							MH
		b									8.97						37.5				S											18" APC
		c	"F8"	482+36.00	L†	326	3.3	2.13		1																						G2 DI GRATE TYPE 24-12
		d									28.94						97.9				S											18" APC
		e	"F8"	481+29.75	L†	435	4.1																		4.06							MH
		f									21.53						153.6				S											18" APC
		g	"FN"	69+22.20	R†	239	5.9	3.21		1																						G2 DI GRATE TYPE 24-12X
		h															36.1				S											18" APC
		i	"FN"	69+33.33	L†	326	5.6	1.60		1																						G3 DI GRATE TYPE 24-12
D-3		j															146.2				S											18" APC
		k	"FN"	70+61.97	R†	239	11.1	5.34		1																						G2 DI GRATE TYPE 24-12X
		l															97.5				S											18" APC
		m	"FS"	85+60	L†	239	5.4	1.56		1																						G3 DI GRATE TYPE 24-12X
		n									6.65						42.8				S											18" APC
		o	"FS"	82+07.50	R†	326	2.8	0.98		1																						G3 DI GRATE TYPE 24-12
		p									3.09						11.1				S											18" APC
		q	"F8"	481+30	L†	326	3.5	1.15		1																						G3 DI GRATE TYPE 24-12
		r									7.53						32.6				S											18" APC
		s	"F8"	482+74.33	L†	326	2.4	1.74	1	1																						G2 DI GRATE TYPE 24-12
SUBTOTAL DQ-6						4,652		20.4	1	10	76.7		6				770	1							19.7					2.0	7.9	

(N) - NOT A SEPARATE BID ITEM

DRAINAGE QUANTITIES

DQ-6

JESUS RICO | REVISED BY | J.R.
CARL GIBSON III | DATE REVISED | 02/07/22
CALCULATED-DESIGNED BY
CHECKED BY
CARL GIBSON III — CONSULTANT FUNCTIONAL SUPERVISOR

STATE OF CALIFORNIA - DEPARTMENT OF TRANSPORTATION
Caltrans

X:\SR 37_FAIRGROUNDS DRIVE\000_CAD\Sheets\017-Drainage\ID-Quantities\044A4414id006.dgn

LAST REVISION 00-00-00 | DATE PLOTTED => 9/1/2022 | TIME PLOTTED => 2:18:28 PM

Dist	COUNTY	ROUTE	POST MILES TOTAL PROJECT	SHEET No.	TOTAL SHEETS
04	Sol	37	10.9		

REGISTERED CIVIL ENGINEER DATE

PLANS APPROVAL DATE

REGISTERED PROFESSIONAL ENGINEER No. Exp. CIVIL STATE OF CALIFORNIA

THE STATE OF CALIFORNIA OR ITS OFFICERS OR AGENTS SHALL NOT BE RESPONSIBLE FOR THE ACCURACY OR COMPLETENESS OF SCANNED COPIES OF THIS PLAN SHEET.

WMH CORPORATION
11070 WHITE ROCK RD
SUITE 140
RANCHO CORDOVA
CA 95670

SOLANO TRANSPORTATION AUTHORITY
1 HARBOR CENTER
SUITE 130
SUISUN CITY, CA 94585

PRELIMINARY PLANS SUBJECT TO REVISION

DRAINAGE QUANTITIES

DRAINAGE PLAN SHEET ⬡	DRAINAGE SYSTEM ⬡	DRAINAGE UNIT No. ◯	STATION		OFFSET	Misc IRON AND STEEL	HEGHT OF INLET "H" (N)	MINOR CONCRETE (MINOR STRUCTURE)	INLET DEPRESSION	DRAINAGE INLET MARKER	CULVERT SLURRY - CEMENT BACKFILL	MINOR CONCRETE (MISC CONSTRUCTION)	REMOVE PIPE	ABANDON CULVERT	REMOVE INLET	6" PERFORATED PLASTIC PIPE UNDERDRAIN	18" ALTERNATIVE PIPE CULVERT	18" CONCRETE FLARED END SECTION	12" CONCRETE FLARED END SECTION	12" ALTERNATIVE PIPE CULVERT	PIPE JOINT CLASSIFICATION (N)	CURB CUT	MODIFY INLET TO MANHOLE	ADJUST MANHOLE TO GRADE	36" PRECAST CONCRETE MANHOLE	48" PRECAST CONCRETE MANHOLE	60" PRECAST CONCRETE MANHOLE	72" PRECAST CONCRETE MANHOLE	CAST-IN-PLACE REINFORCED CONCRETE JUNCTION STRUCTURE	ROCK SLOPE PROTECTION (FACING, METHOD B)	ROCK SLOPE PROTECTION FABRIC (CLASS 8)	DESCRIPTION
						LB	FT	CY	EA	EA	CY	CY	LF	LF	EA	LF	LF	EA	EA	LF		EA	EA	EA	LF	LF	LF	LF	EA	CY	SQYD	
D-3		†															8.1				S											18" APC
		u	"F8"	482+86.05	L†	435	2.7																		2.73							MH
		v															3.2				S											18" APC
		w	"F8"	482+85.35	L†	326	5.9	1.60		1																						G1 DI GRATE TYPE 24-12
		x	"F8"	482+40.07	R†								3																			REMOVE PIPE PORTION
		y	"F8"	481+00	L†																											VERTICAL RISER
		z	"FN"	70+00	R†																											VERTICAL RISER
	28	a	"F5"	373+00	L†	326	4.4	1.33	1	1																						G3 DI GRATE TYPE 24-12
		b															11.2				S											18" APC
		c	"F5"	373+00	L†	435	4.7																		4.67							MH
		d															9.5				S											18" APC
		e	"F5"	373+00	R†	326	4.3	1.32	1	1																						G3 DI GRATE TYPE 24-12
		f											61.8																			REMOVE PIPE
	29	a	"FS"	82+24.64	L†	435	4.5																		4.51							MH
		b															82.5				S											18" APC
		c	"FS"	83+09.98	L†	239	5.0	2.83		1																						G2 DI GRATE TYPE 24-12X
		d															49.1				S											18" APC
		e	"F5"	373+71.90	L†	326	5.4	1.56		1																						G3 DI GRATE TYPE 24-12
		f	"F5"	373+71.90	L†										1																	REMOVE INLET
		g	"FS"	82+24.64	L†										1																	REMOVE INLET
	30	a	"FS"	79+70	R†	435	6.2																		6.21							MH
		b									0.55						1.4				S											18" APC
		c	"FS"	79+70	R†	326	3.7	1.18		1																						G3 DI GRATE TYPE 24-12
		d	"FS"	79+70	R†								3																			REMOVE PIPE PORTION
D-1	31	a	"F"	23+50	R†	239	2.5	0.92		1																						G3 DI GRATE TYPE 24-12X
		b															14.5				DD											18" APC
		c	"F"	23+50	R†													1														4.6' CFES
		d																												1.90	7.49	RSP
	32	a	"F"	25+80	R†	239	2.5	0.92		1																						G3 DI GRATE TYPE 24-12X
		b															14.5				DD											18" APC
SUBTOTAL DQ-7						4,087		11.7	2	8	0.6		68		2		194	1							18.1					1.9	7.5	

(N) - NOT A SEPARATE BID ITEM

DRAINAGE QUANTITIES

DQ-7

JESUS RICO — CALCULATED-DESIGNED BY
CARL GIBSON III — CHECKED BY
J.R. — REVISED BY
02/07/22 — DATE REVISED
CARL GIBSON III — CONSULTANT FUNCTIONAL SUPERVISOR

STATE OF CALIFORNIA - DEPARTMENT OF TRANSPORTATION
Caltrans

X:\SR 37_FAIRGROUNDS DRIVE\000_CAD\Sheets\017-Drainage\ID-Quantities\044A4414id007.dgn

LAST REVISION 00-00-00 | DATE PLOTTED => 9/1/2022 | TIME PLOTTED => 2:18:30 PM

Dist	COUNTY	ROUTE	POST MILES TOTAL PROJECT	SHEET No.	TOTAL SHEETS
04	Sol	37	10.9		

REGISTERED CIVIL ENGINEER DATE

PLANS APPROVAL DATE

REGISTERED PROFESSIONAL ENGINEER No. Exp. CIVIL STATE OF CALIFORNIA

THE STATE OF CALIFORNIA OR ITS OFFICERS OR AGENTS SHALL NOT BE RESPONSIBLE FOR THE ACCURACY OR COMPLETENESS OF SCANNED COPIES OF THIS PLAN SHEET.

WMH CORPORATION
11070 WHITE ROCK RD
SUITE 140
RANCHO CORDOVA
CA 95670

SOLANO TRANSPORTATION AUTHORITY
1 HARBOR CENTER
SUITE 130
SUISUN CITY, CA 94585

PRELIMINARY PLANS SUBJECT TO REVISION

DRAINAGE QUANTITIES

DRAINAGE PLAN SHEET	DRAINAGE SYSTEM ⬡	DRAINAGE UNIT No. ◯	STATION		OFFSET	Misc IRON AND STEEL	HEGHT OF INLET "H" (N)	MINOR CONCRETE (MINOR STRUCTURE)	INLET DEPRESSION	DRAINAGE INLET MARKER	CULVERT SLURRY - CEMENT BACKFILL	MINOR CONCRETE (MISC CONSTRUCTION)	REMOVE PIPE	ABANDON CULVERT	REMOVE INLET	6" PERFORATED PLASTIC PIPE UNDERDRAIN	18" ALTERNATIVE PIPE CULVERT	18" CONCRETE FLARED END SECTION	12" CONCRETE FLARED END SECTION	12" ALTERNATIVE PIPE CULVERT	PIPE JOINT CLASSIFICATION (N)	CURB CUT	MODIFY INLET TO MANHOLE	ADJUST MANHOLE TO GRADE	36" PRECAST CONCRETE MANHOLE	48" PRECAST CONCRETE MANHOLE	60" PRECAST CONCRETE MANHOLE	72" PRECAST CONCRETE MANHOLE	CAST-IN-PLACE REINFORCED CONCRETE JUNCTION STRUCTURE	ROCK SLOPE PROTECTION (FACING, METHOD B)	ROCK SLOPE PROTECTION FABRIC (CLASS 8)	DESCRIPTION
						LB	FT	CY	EA	EA	CY	CY	LF	LF	EA	LF	LF	EA	EA	LF		EA	EA	EA	LF	LF	LF	LF	EA	CY	SQYD	
		c	"F"	25+79.35	Rt													1														4.6' CFES
		d																												1.90	7.49	RSP
D-1	33	a	"F"	28+50.00	Rt	400				1												1										CURB CUT
		b						0.38																								CONCRETE CHANNEL
		c																												3.83	13.29	RSP
D-3	34	a	"FN"	61+50	Rt	326	10.5	2.68	1	1																						G3 DI GRATE TYPE 24-12
		b	"FN"	61+50	Rt								3																			REMOVE PIPE PORTION
D-2	35	a	"F"	33+00	Rt	400				1												1										CURB CUT
		b						0.38																								CONCRETE CHANNEL
		c																												3.71	12.94	RSP
	36	a	"F"	36+50	Rt	400				1												1										CURB CUT
		b						0.28																								CONCRETE CHANNEL
		c																												3.47	12.22	RSP
		d	"F"	36+56.66	Rt																		1									MODIFY INLET TO MH
	37	a	"F"	34+44.56	Rt	435	4.1																1									MODIFY INLET TO MH
		b															56.1				S											18" APC
		c	"F"	35+00	Rt	326	3.0	0.95		1																						G1 DI GRATE TYPE 24-12
	38	a	"FS"	78+98.83	Rt	435	6.4																		6.44							MH
		b									0.55						1.4				S											18" APC
		c	"FS"	79+00	Rt	326	3.7	1.18	1	1																						G3 DI GRATE TYPE 24-12
		d	"FS"	78+98.83	Rt								3																			REMOVE PIPE PORTION
		e															39.1				S											18" APC
		f	"FS"	78+98.13	Rt	239	3.7	1.18		1																						G3 DI GRATE TYPE 24-12X
D-3	39	a	"FA3"	177+70	Rt	326	6.6	1.82	1	1																						G3 DI GRATE TYPE 24-12
		b															4.8				S											18" APC
		c	"FA3"	177+72.17	Rt	435	7.1																		7.06							MH
		d	"FA3"	177+72.17	Rt								3																			REMOVE PIPE PORTION
	40	a	"F5"	372+00	Lt	326	5.4	2.99		1																						G2 DI GRATE TYPE 24-12
		b															68.5				S											18" APC
		c	"F5"	372+78.51	Rt	435	6.3																		6.33							MH
SUBTOTAL DQ-8						4,809		11.8	3	9	0.6		9				170	1				3	2		19.8					12.9	45.9	

(N) - NOT A SEPARATE BID ITEM

DRAINAGE QUANTITIES

DQ-8

JESUS RICO	REVISED BY	J.R.	
CARL GIBSON III	DATE REVISED	02/07/22	
CALCULATED-DESIGNED BY			
CHECKED BY			
CARL GIBSON III			
CONSULTANT FUNCTIONAL SUPERVISOR			

STATE OF CALIFORNIA - DEPARTMENT OF TRANSPORTATION

Caltrans

X:\SR 37_FAIRGROUNDS DRIVE\000_CAD\Sheets\017-Drainage\ID-Quantities\044A4414id008.dgn

LAST REVISION 00-00-00 | DATE PLOTTED => 9/1/2022 TIME PLOTTED => 2:18:32 PM

Dist	COUNTY	ROUTE	POST MILES TOTAL PROJECT	SHEET No.	TOTAL SHEETS
04	Sol	37	10.9		

REGISTERED CIVIL ENGINEER DATE

PLANS APPROVAL DATE

REGISTERED PROFESSIONAL ENGINEER No. Exp. CIVIL STATE OF CALIFORNIA

THE STATE OF CALIFORNIA OR ITS OFFICERS OR AGENTS SHALL NOT BE RESPONSIBLE FOR THE ACCURACY OR COMPLETENESS OF SCANNED COPIES OF THIS PLAN SHEET.

WMH CORPORATION
11070 WHITE ROCK RD
SUITE 140
RANCHO CORDOVA
CA 95670

SOLANO TRANSPORTATION AUTHORITY
1 HARBOR CENTER
SUITE 130
SUISUN CITY, CA 94585

PRELIMINARY PLANS SUBJECT TO REVISION

DRAINAGE QUANTITIES

DRAINAGE PLAN SHEET	DRAINAGE SYSTEM ⬡	DRAINAGE UNIT No. ◯	STATION		OFFSET	Misc IRON AND STEEL	HEGHT OF INLET "H" (N)	MINOR CONCRETE (MINOR STRUCTURE)	INLET DEPRESSION	DRAINAGE INLET MARKER	CULVERT SLURRY - CEMENT BACKFILL	MINOR CONCRETE (MISC CONSTRUCTION)	REMOVE PIPE	ABANDON CULVERT	REMOVE INLET	6" PERFORATED PLASTIC PIPE UNDERDRAIN	18" ALTERNATIVE PIPE CULVERT	18" CONCRETE FLARED END SECTION	12" CONCRETE FLARED END SECTION	12" ALTERNATIVE PIPE CULVERT	PIPE JOINT CLASSIFICATION (N)	CURB CUT	MODIFY INLET TO MANHOLE	ADJUST MANHOLE TO GRADE	36" PRECAST CONCRETE MANHOLE	48" PRECAST CONCRETE MANHOLE	60" PRECAST CONCRETE MANHOLE	72" PRECAST CONCRETE MANHOLE	CAST-IN-PLACE REINFORCED CONCRETE JUNCTION STRUCTURE	ROCK SLOPE PROTECTION (FACING, METHOD B)	ROCK SLOPE PROTECTION FABRIC (CLASS 8)	DESCRIPTION
						LB	FT	CY	EA	EA	CY	CY	LF	LF	EA	LF	LF	EA	EA	LF		EA	EA	EA	LF	LF	LF	LF	EA	CY	SQYD	
		d	"F5"	372+78.51	R+								3																			REMOVE PIPE PORTION
		e															3.4				S											18" APC
D-3		f	"F5"	372+74.60	R+	435	6.2																		6.16							MH
		g															30.3				S											18" APC
		h	"F5"	372+90	L+	435	5.5																		5.47							MH
D-1	41	a														238.4																BFS "B1" 6"PPP
	42	a														230.0																BFS "B2" 6"PPP
D-2	43	a														211.1																BFS "B3" 6"PPP
	44	a														316.1																BFS "B4" 6"PPP
	45	a														150.1																BFS "B5" 6"PPP
D-3	46	a	"F6"	473+34.49	L+	140		6.41																								WEIR
		b															9.5															18" APC
		c																														TRASH NET (L=20′)
D-2	47	a	"F"	38+90	R+	435	3.7																		3.67							MH
		b															16.9				S											18" APC
		c	"F"	38+90	R+	435	11.7																		11.72							MH
		d	"F"	38+90	R+								3																			REMOVE PIPE PORTION
D-3	48	a	"FA2"	276+45.71	R+	435	4.7																		4.69							MH
		b															45.5				S											18" APC
		c	"FA2"	276+90	L+	326	4.2	1.30		1																						G3 DI GRATE TYPE 24-12
		d	"FA2"	276+45.71	R+								3																			REMOVE PIPE PORTION
	49	a	"FA3"	177+00	R+	435	6.6																		6.61							MH
		b															1.5				S											18" APC
		c	"FA3"	177+00	L+	326	6.3	1.75		1																						G3 DI GRATE TYPE 24-12
		d	"FA3"	177+00	R+								3																			REMOVE PIPE PORTION
	50	a	"FA1"	173+00	R+	435	5.9																		5.87							MH
		b	"FA1"	173+00	R+								3																			REMOVE PIPE PORTION
D-2	51	a	"F"	40+85	R+	239	3.7	1.18		1																						G3 DI GRATE TYPE 24-12X
		b															13.8				S											18" APC
		c	"F"	40+85	R+	435	16.6																		16.64							MH
SUBTOTAL DQ-9						4,511		10.6		3			15			1,146	121								61							

(N) - NOT A SEPARATE BID ITEM

DRAINAGE QUANTITIES

DQ-9

JESUS RICO | REVISED BY | J.R.
CARL GIBSON III | DATE REVISED | 02/07/22
CALCULATED-DESIGNED BY
CHECKED BY
CARL GIBSON III | CONSULTANT FUNCTIONAL SUPERVISOR

STATE OF CALIFORNIA - DEPARTMENT OF TRANSPORTATION
Caltrans

X:\SR 37_FAIRGROUNDS DRIVE\000_CAD\Sheets\017-Drainage\ID-Quantities\044A4414id009.dgn

LAST REVISION 00-00-00 | DATE PLOTTED => 9/1/2022 TIME PLOTTED => 2:18:34 PM

Dist	COUNTY	ROUTE	POST MILES TOTAL PROJECT	SHEET No.	TOTAL SHEETS
04	Sol	37	10.9		

REGISTERED CIVIL ENGINEER DATE

PLANS APPROVAL DATE

REGISTERED PROFESSIONAL ENGINEER No. Exp. CIVIL STATE OF CALIFORNIA

THE STATE OF CALIFORNIA OR ITS OFFICERS OR AGENTS SHALL NOT BE RESPONSIBLE FOR THE ACCURACY OR COMPLETENESS OF SCANNED COPIES OF THIS PLAN SHEET.

WMH CORPORATION
11070 WHITE ROCK RD
SUITE 140
RANCHO CORDOVA
CA 95670

SOLANO TRANSPORTATION AUTHORITY
1 HARBOR CENTER
SUITE 130
SUISUN CITY, CA 94585

PRELIMINARY PLANS SUBJECT TO REVISION

DRAINAGE QUANTITIES

DRAINAGE PLAN SHEET	DRAINAGE SYSTEM ⬡	DRAINAGE UNIT No. ◯	STATION	OFFSET	Misc IRON AND STEEL	HEGHT OF INLET "H" (N)	MINOR CONCRETE (MINOR STRUCTURE)	INLET DEPRESSION	DRAINAGE INLET MARKER	CULVERT SLURRY - CEMENT BACKFILL	MINOR CONCRETE (MISC CONSTRUCTION)	REMOVE PIPE	ABANDON CULVERT	REMOVE INLET	6" PERFORATED PLASTIC PIPE UNDERDRAIN	18" ALTERNATIVE PIPE CULVERT	18" CONCRETE FLARED END SECTION	12" CONCRETE FLARED END SECTION	12" ALTERNATIVE PIPE CULVERT	PIPE JOINT CLASSIFICATION (N)	CURB CUT	MODIFY INLET TO MANHOLE	ADJUST MANHOLE TO GRADE	36" PRECAST CONCRETE MANHOLE	48" PRECAST CONCRETE MANHOLE	60" PRECAST CONCRETE MANHOLE	72" PRECAST CONCRETE MANHOLE	CAST-IN-PLACE REINFORCED CONCRETE JUNCTION STRUCTURE	ROCK SLOPE PROTECTION (FACING, METHOD B)	ROCK SLOPE PROTECTION FABRIC (CLASS 8)	DESCRIPTION
					LB	FT	CY	EA	EA	CY	CY	LF	LF	EA	LF	LF	EA	EA	LF		EA	EA	EA	LF	LF	LF	LF	EA	CY	SQYD	
D-2		d	"F" 40+85	R+								3																			REMOVE PIPE PORTION
D-3	D5										26.92																				DITCH "D5"
	D6										19.88																				DITCH "D6"
SUBTOTAL DQ-10											47	3																			
SUBTOTAL DQ-9					4,511		10.6		3			15			1,146	121								60.8							
SUBTOTAL DQ-8					4,809		11.8	3	9	0.6		9				170	1				3	2		19.8					13	46	
SUBTOTAL DQ-7					4,087		11.7	2	8	0.6		68		2		194	1							18.1					1.9	7.5	
SUBTOTAL DQ-6					4,652		20.4	1	10	76.7		6				770	1							19.7					2.0	7.9	
SUBTOTAL DQ-5					5,566		11.7	3	8	3.1		12		3		173								34.4		6.5					
SUBTOTAL DQ-4					4,805		12.6	1	7	0.8		73		4		187								10.4	15.9		7.1				
SUBTOTAL DQ-3					4,392		8.7		6			33		3		335	2					2	1	22.6	16.8				5.7	20.7	
SUBTOTAL DQ-2					7,333		14.8		7			8	82	1		438					2			20.7				1	10.3	36.3	
SUBTOTAL DQ-1					3,835		6.3	1	8			101		1		662	2	1	13		1			28.1					3.8	14.9	
GRAND TOTAL					43,990		108.7	11	66	81.6	46.8	329	82	14	1,146	3,050	7	1	13		6	4	1	234.7	32.7	6.5	7.1	1	36.6	133.1	

(N) - NOT A SEPARATE BID ITEM

DRAINAGE QUANTITIES

DQ-10

REVISED BY	DATE REVISED
J.R.	02/07/22

CALCULATED-DESIGNED BY: JESUS RICO
CHECKED BY: CARL GIBSON III
SUPERVISOR: CARL GIBSON III
CONSULTANT FUNCTIONAL SUPERVISOR

STATE OF CALIFORNIA - DEPARTMENT OF TRANSPORTATION
Caltrans

X:\SR 37_FAIRGROUNDS DRIVE\000_CAD\Sheets\017-Drainage\1D-Quantities\044A4414id010.dgn

LAST REVISION 00-00-00
DATE PLOTTED => 9/1/2022
TIME PLOTTED => 2:18:36 PM

Dist	COUNTY	ROUTE	POST MILES TOTAL PROJECT	SHEET No.	TOTAL SHEETS
04	Sol	37	10.9		

REGISTERED CIVIL ENGINEER DATE

DECEMBER 31, 2022
PLANS APPROVAL DATE

REGISTERED PROFESSIONAL ENGINEER No. Exp. CIVIL STATE OF CALIFORNIA

THE STATE OF CALIFORNIA OR ITS OFFICERS OR AGENTS SHALL NOT BE RESPONSIBLE FOR THE ACCURACY OR COMPLETENESS OF SCANNED COPIES OF THIS PLAN SHEET.

WMH CORPORATION
11070 WHITE ROCK RD
SUITE 140
RANCHO CORDOVA
CA 95670

SOLANO TRANSPORTATION AUTHORITY
1 HARBOR CENTER
SUITE 130
SUISUN CITY, CA 94585

PRELIMINARY PLANS SUBJECT TO REVISION

NOTE:

FOR ACCURATE RIGHT OF WAY DATA, CONTACT RIGHT OF WAY ENGINEERING AT THE DISTRICT OFFICE.

UTILITY OWNERSHIP:

ELECTRICAL - PACIFIC GAS & ELECTRIC
GAS - PACIFIC GAS & ELECTRIC
SEWER - VALLEJO SANITATION & FLOOD CONTROL DISTRICT
WATER - CITY OF VALLEJO

ABBREVIATIONS:

ED	ELECTRONIC DETECTION
PG&E	PACIFIC GAS & ELECTRIC
TH	TEST HOLE
VSFCD	VALLEJO SANITATION & FLOOD CONTROL DISTRICT

LEGEND:

- ⊗ TEST HOLE LOCATION
- XXX ELECTRONIC DETECTION/MANHOLE DIP NUMBER
- XXX TEST HOLE NUMBER
- —x——x— FENCE

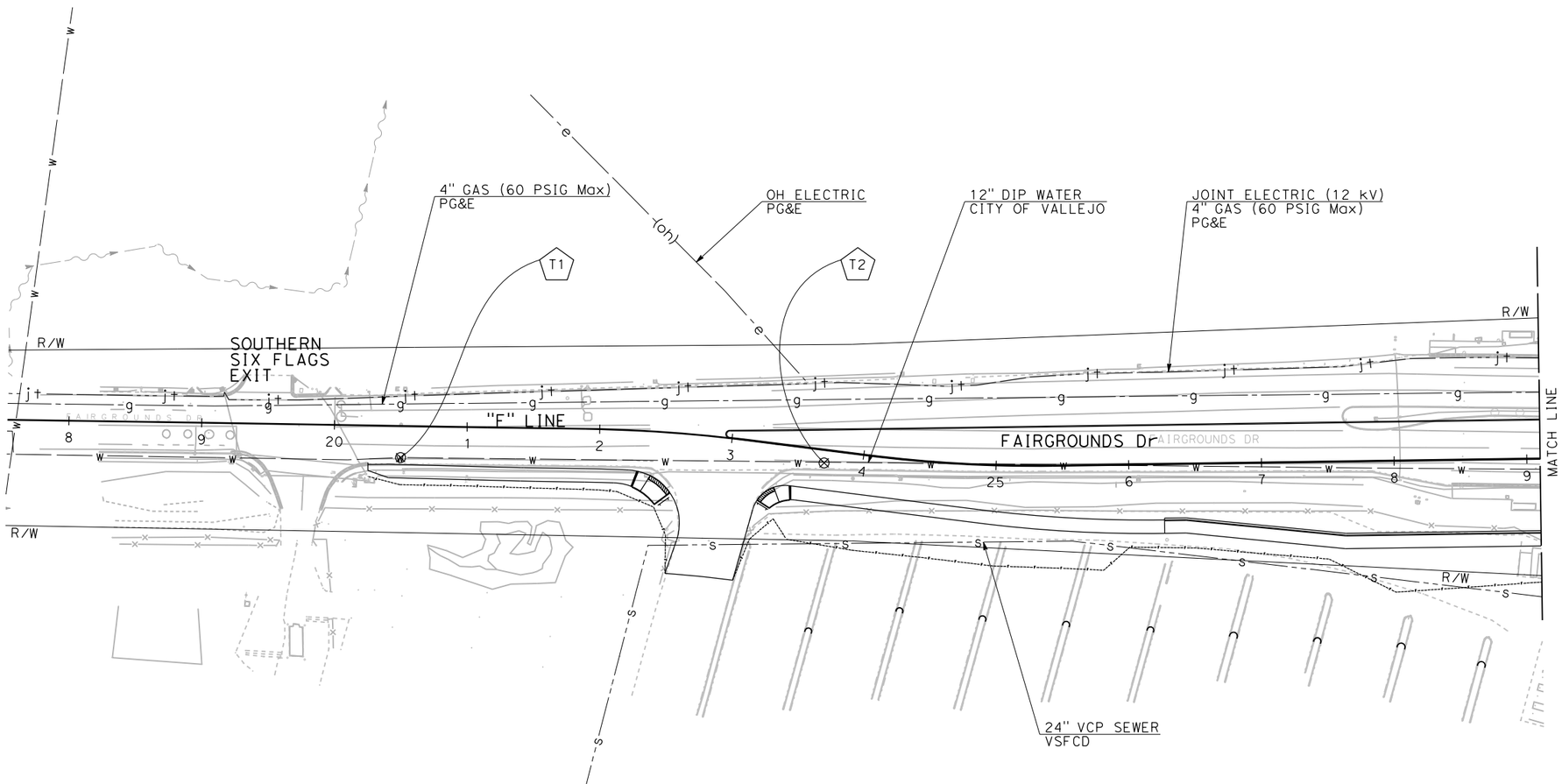

POSITIVE LOCATION INFORMATION

No. (X)	UTILITY	METHOD	NORTHING	EASTING	TRAFFIC CONTROL	GROUND ELEVATION	UTILITY DEPTH	TOP OF PIPE ELEVATION
T1	12" WATER	TH	1810897.398	6495619.846	LANE CLOSURE ON MULTILANE CONVENTIONAL HIGHWAYS	86.89	3.67	83.22
T2	12" WATER	TH	1811215.983	6495599.606	LANE CLOSURE ON MULTILANE CONVENTIONAL HIGHWAYS	87.22	6.00	81.22

THIS PLAN TO BE USED FOR UTILITY INFORMATION ONLY

UTILITY PLAN

SCALE: 1" = 50'

U-1

R.L.	03/08/22
REVISED BY	DATE REVISED
RALEIGH LANGSTON	CARL GIBSON III
CALCULATED-DESIGNED BY	CHECKED BY
CONSULTANT FUNCTIONAL SUPERVISOR	CARL GIBSON III

STATE OF CALIFORNIA - DEPARTMENT OF TRANSPORTATION
Caltrans

X:\SR 37_FAIRGROUNDS DRIVE\000_CAD\Sheets\020-Utility\KA-Plans\044A4414ka001.dgn

LAST REVISION 00-00-00
DATE PLOTTED => 12/15/2022
TIME PLOTTED => 2:57:40 PM

Dist	COUNTY	ROUTE	POST MILES TOTAL PROJECT	SHEET No.	TOTAL SHEETS
04	Sol	37	10.9		

REGISTERED CIVIL ENGINEER DATE

DECEMBER 31, 2022
PLANS APPROVAL DATE

REGISTERED PROFESSIONAL ENGINEER No. Exp. CIVIL STATE OF CALIFORNIA

THE STATE OF CALIFORNIA OR ITS OFFICERS OR AGENTS SHALL NOT BE RESPONSIBLE FOR THE ACCURACY OR COMPLETENESS OF SCANNED COPIES OF THIS PLAN SHEET.

WMH CORPORATION
11070 WHITE ROCK RD
SUITE 140
RANCHO CORDOVA
CA 95670

SOLANO TRANSPORTATION AUTHORITY
1 HARBOR CENTER
SUITE 130
SUISUN CITY, CA 94585

PRELIMINARY PLANS SUBJECT TO REVISION

NOTE:

FOR ACCURATE RIGHT OF WAY DATA, CONTACT RIGHT OF WAY ENGINEERING AT THE DISTRICT OFFICE.

POSITIVE LOCATION INFORMATION

No. (X)	UTILITY	METHOD	NORTHING	EASTING	TRAFFIC CONTROL	GROUND ELEVATION	UTILITY DEPTH	TOP OF PIPE ELEVATION
T3	*8" WATER	TH	1811791.707	6495531.420	HALF ROAD CLOSURE ON MULTILANE CONVENTIONAL HIGHWAYS AND EXPRESSWAYS	87.60	-	-
T4	12" STORM	TH	1812104.935	6495536.637	HALF ROAD CLOSURE ON MULTILANE CONVENTIONAL HIGHWAYS AND EXPRESSWAYS	86.32	5.83	80.49
T5	4" GAS	TH	1812591.841	6495348.959	HALF ROAD CLOSURE ON MULTILANE CONVENTIONAL HIGHWAYS AND EXPRESSWAYS	87.42	3.25	84.17
T6	4" ELECTRICAL	TH	1812592.902	6495348.205	HALF ROAD CLOSURE ON MULTILANE CONVENTIONAL HIGHWAYS AND EXPRESSWAYS	87.43	3.42	84.01
T7	4" ELECTRICAL	TH	1812594.256	6495347.245	HALF ROAD CLOSURE ON MULTILANE CONVENTIONAL HIGHWAYS AND EXPRESSWAYS	87.45	3.33	84.12
T8	6" WATER	TH	1812637.607	6495315.477	HALF ROAD CLOSURE ON MULTILANE CONVENTIONAL HIGHWAYS AND EXPRESSWAYS	88.60	4.00	84.60
T9	12" WATER	TH	1812639.069	6495311.744	HALF ROAD CLOSURE ON MULTILANE CONVENTIONAL HIGHWAYS AND EXPRESSWAYS	88.74	3.75	84.99
T10	4" GAS	TH	1812687.897	6495289.740	NONE	90.75	2.58	88.17
T11	24" WATER	TH	1812807.276	6495203.415	HALF ROAD CLOSURE ON MULTILANE CONVENTIONAL HIGHWAYS AND EXPRESSWAYS	94.55	3.25	91.30

* THIS UTILITY WAS UNABLE TO BE POSITIVELY LOCATED

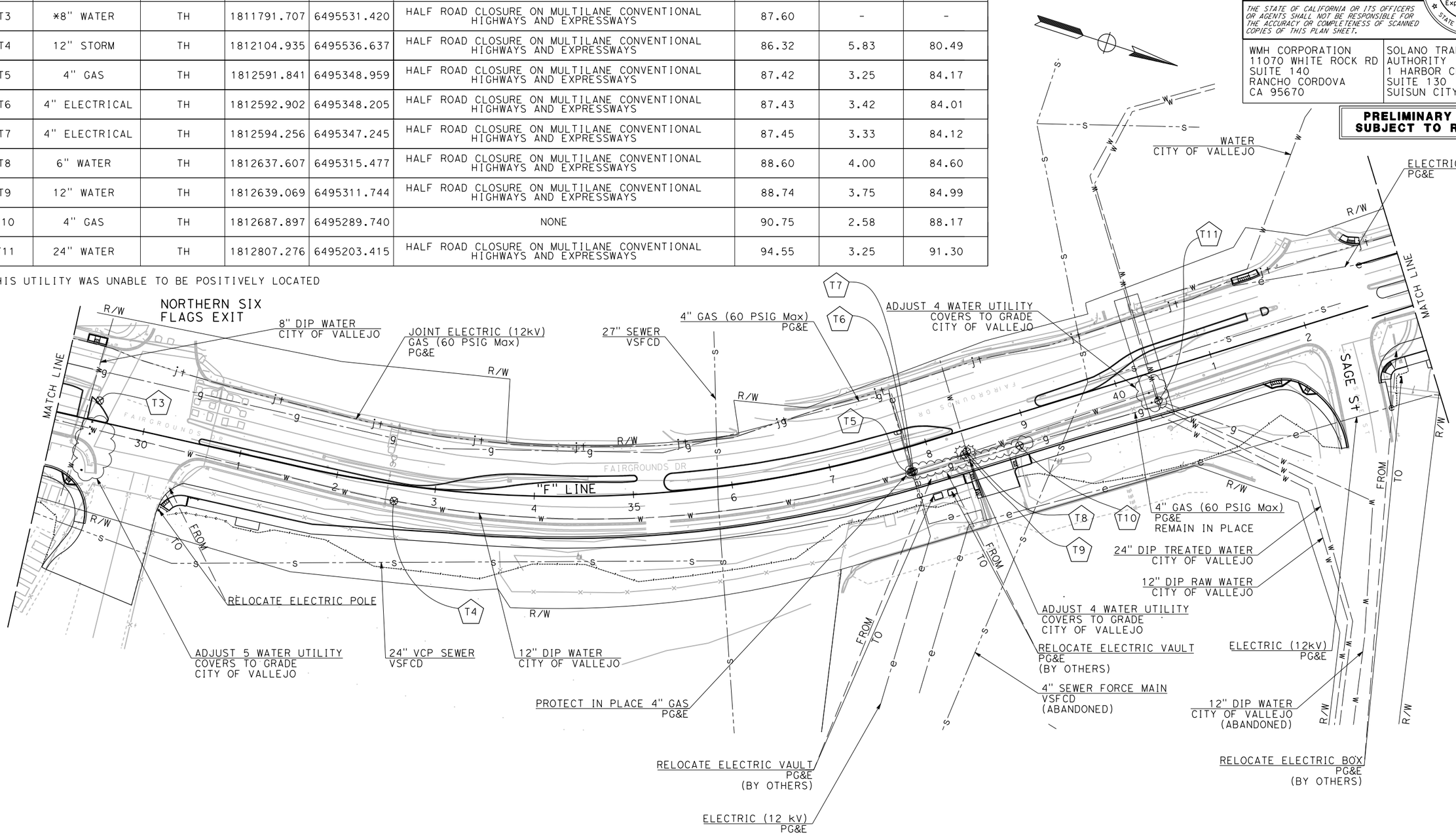

THIS PLAN TO BE USED FOR UTILITY INFORMATION ONLY

UTILITY PLAN

SCALE: 1" = 50'

U-2

R.L.	03/08/22	REVISED BY	DATE REVISED
RALEIGH LANGSTON	CARL GIBSON III	CALCULATED-DESIGNED BY	CHECKED BY
CARL GIBSON III		CONSULTANT FUNCTIONAL SUPERVISOR	

STATE OF CALIFORNIA - DEPARTMENT OF TRANSPORTATION

Caltrans

X:\SR 37_FAIRGROUNDS DRIVE\000_CAD\Sheets\020-Utility\KA-Plans\044A4414ka002.dgn

LAST REVISION 00-00-00 | DATE PLOTTED => 12/15/2022 | TIME PLOTTED => 2:57:44 PM

Dist	COUNTY	ROUTE	POST MILES TOTAL PROJECT	SHEET No.	TOTAL SHEETS
04	Sol	37	10.9		

REGISTERED CIVIL ENGINEER DATE

DECEMBER 31, 2022
PLANS APPROVAL DATE

REGISTERED PROFESSIONAL ENGINEER No. Exp. CIVIL STATE OF CALIFORNIA

THE STATE OF CALIFORNIA OR ITS OFFICERS OR AGENTS SHALL NOT BE RESPONSIBLE FOR THE ACCURACY OR COMPLETENESS OF SCANNED COPIES OF THIS PLAN SHEET.

WMH CORPORATION
11070 WHITE ROCK RD
SUITE 140
RANCHO CORDOVA
CA 95670

SOLANO TRANSPORTATION AUTHORITY
1 HARBOR CENTER
SUITE 130
SUISUN CITY, CA 94585

PRELIMINARY PLANS SUBJECT TO REVISION

NOTE:

FOR ACCURATE RIGHT OF WAY DATA, CONTACT RIGHT OF WAY ENGINEERING AT THE DISTRICT OFFICE.

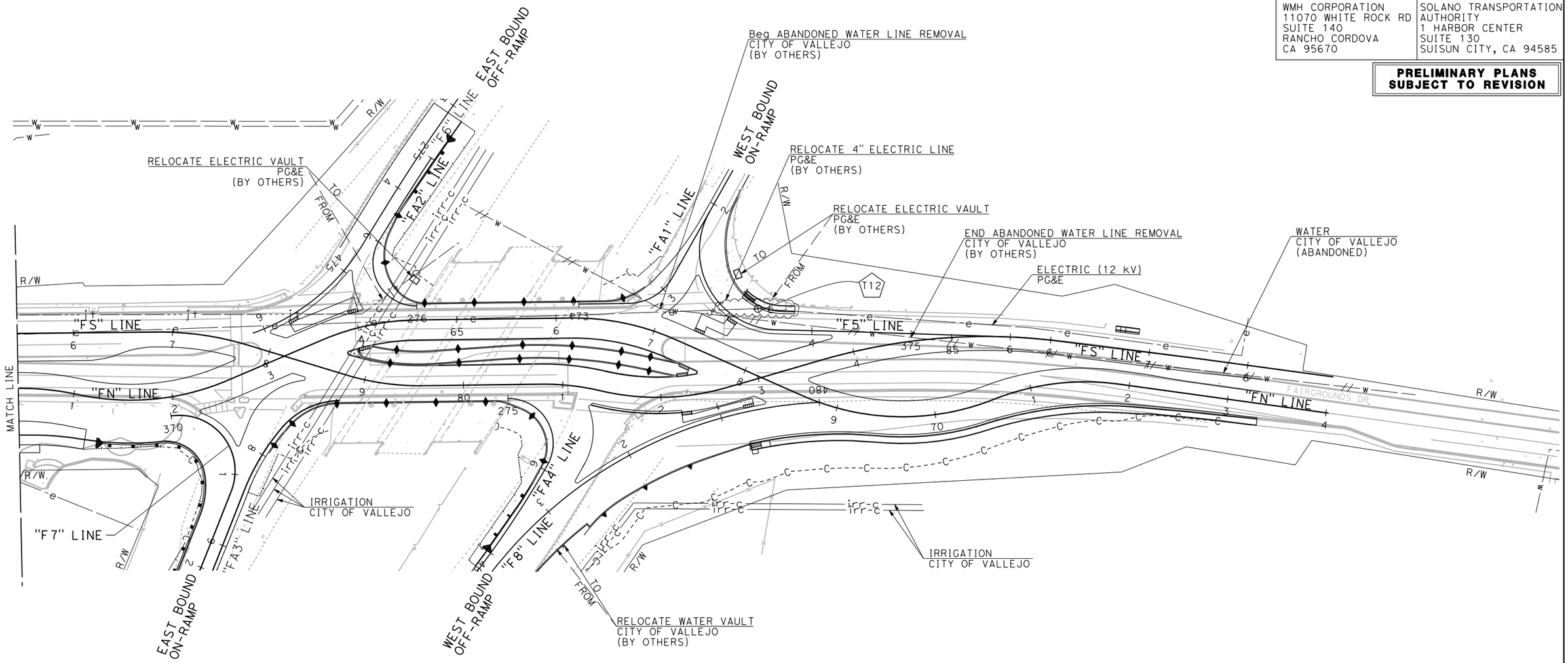

POSITIVE LOCATION INFORMATION

No. (X)	UTILITY	METHOD	NORTHING	EASTING	TRAFFIC CONTROL	GROUND ELEVATION	UTILITY DEPTH	TOP OF PIPE ELEVATION
T12	4" ELECTRICAL X" WATER	TH	1813598.170	6494554.292	LANE CLOSURE ON MULTILANE CONVENTIONAL HIGHWAYS	104.66	0.75	103.91

THIS PLAN TO BE USED FOR UTILITY INFORMATION ONLY

UTILITY PLAN

SCALE: 1" = 50'

U-3

R.L.	03/08/22	RALEIGH LANGSTON	CARL GIBSON III
REVISED BY	DATE REVISED	CALCULATED-DESIGNED BY	CHECKED BY

CARL GIBSON III — CONSULTANT FUNCTIONAL SUPERVISOR

STATE OF CALIFORNIA - DEPARTMENT OF TRANSPORTATION

Caltrans

X:\SR 37_FAIRGROUNDS DRIVE\000_CAD\Sheets\020-Utility\KA-Plans\044A4414ka003.dgn

LAST REVISION 00-00-00 | DATE PLOTTED => 12/15/2022 | TIME PLOTTED => 23:57:48 PM

Dist	COUNTY	ROUTE	POST MILES TOTAL PROJECT	SHEET No.	TOTAL SHEETS
04	Sol	37	10.9		

REGISTERED CIVIL ENGINEER DATE

PLANS APPROVAL DATE

REGISTERED PROFESSIONAL ENGINEER No. Exp. CIVIL STATE OF CALIFORNIA

THE STATE OF CALIFORNIA OR ITS OFFICERS OR AGENTS SHALL NOT BE RESPONSIBLE FOR THE ACCURACY OR COMPLETENESS OF SCANNED COPIES OF THIS PLAN SHEET.

WMH CORPORATION
11070 WHITE ROCK RD
SUITE 140
RANCHO CORDOVA
CA 95670

SOLANO TRANSPORTATION AUTHORITY
1 HARBOR CENTER
SUITE 130
SUISUN CITY, CA 94585

PRELIMINARY PLANS SUBJECT TO REVISION

NOTE:

EXACT LOCATION AND POSITION OF SIGNS WILL BE DETERMINED BY THE ENGINEER.

LEGEND:

ROADSIDE SIGN ONE POST

ROADSIDE SIGN TWO POST

STATIONARY MOUNTED CONSTRUCTION AREA SIGNS

SIGN No.	SIGN DESIGNATION	PANEL SIZE	SIGN MESSAGE OR REMARKS	No. OF POSTS AND SIZE	No. OF SIGNS
A	W20-1	30" x 30"	ROAD WORK AHEAD	1 - 4" x 4"	3
B	C40(CA)	108" x 42"	TRAFFIC FINES DOUBLED IN CONSTRUCTION ZONES	2 - 4" x 6"	3
C	G20-5aP	24" x 18"	WORK ZONE	1 - 4" x 4"	5
	R2-1	24" x 30"	SPEED LIMIT (25)		
	RADAR SPEED TRAILERS		YOUR SPEED XX	-	
D	SPECIAL	154" x 100"	CONSTRUCTION PROJECT FUNDING SIGN	2 - TYPE L	3
E	G20-2	30" x 18"	END ROAD WORK	1 - 4" x 4"	3
F	C23(CA)	30" x 30"	RAMP WORK AHEAD	1 - 4" x 4"	2
G	R2-11	24" x 30"	END DOUBLE FINES ZONE	1 - 4" x 4"	2
	G20-2	30" x 18"	END ROAD WORK		
H	W20-1	30" x 30"	ROAD WORK AHEAD	1 - 4" x 6"	1
	R2-1	24" x 30"	SPEED LIMIT (25)		

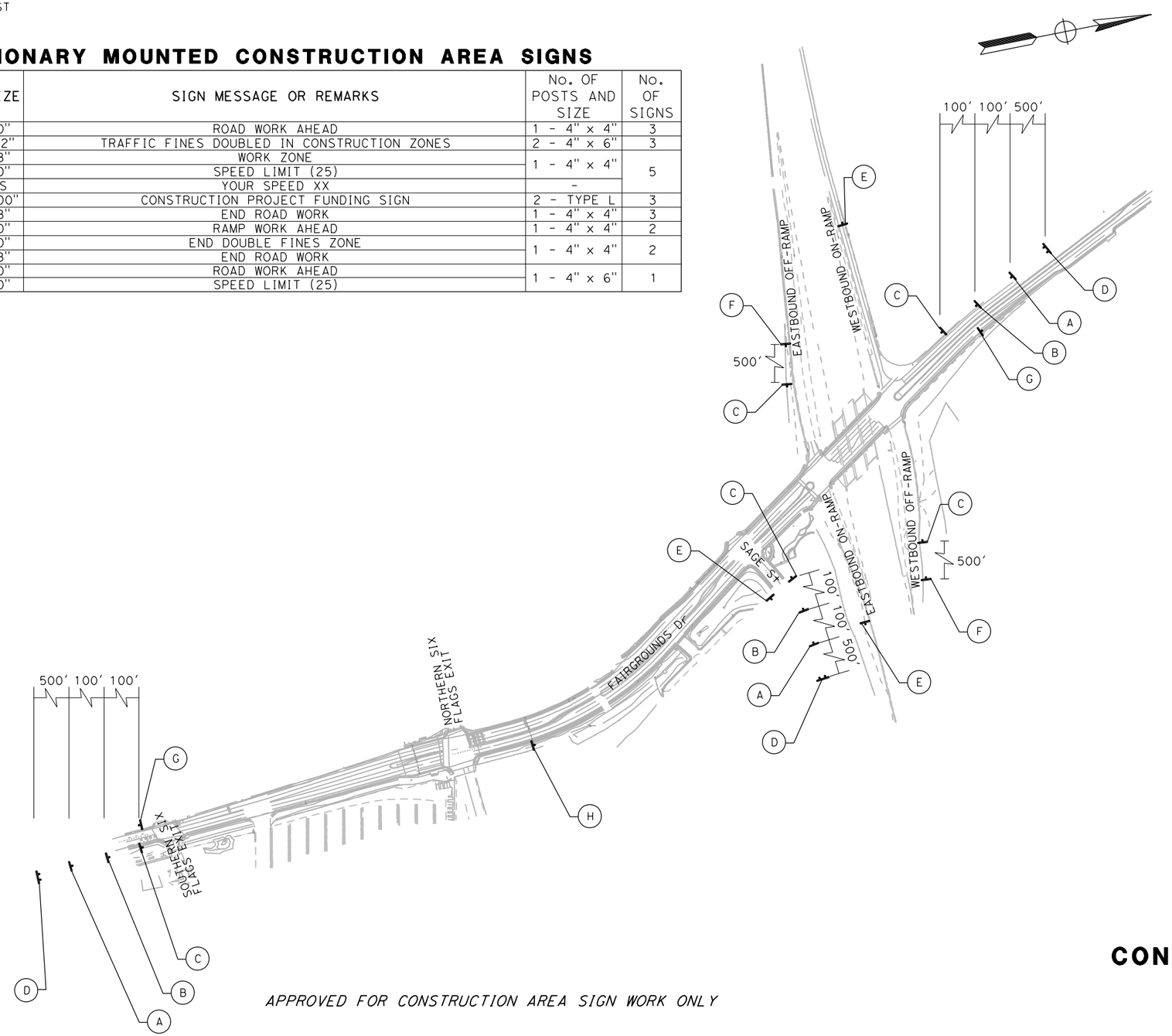

APPROVED FOR CONSTRUCTION AREA SIGN WORK ONLY

CONSTRUCTION AREA SIGNS

NO SCALE

CS-1

REVISED BY	DATE REVISED
J.V.	02/15/22

JAMEY VALDIVIA — CARL GIBSON III

CALCULATED-DESIGNED BY — CHECKED BY

CONSULTANT FUNCTIONAL SUPERVISOR — CARL GIBSON III

STATE OF CALIFORNIA - DEPARTMENT OF TRANSPORTATION

Caltrans

X:\SR 37_FAIRGROUNDS DRIVE\000_CAD\Sheets\021-CAS\LA-Plans\04150000401a001.dgn

LAST REVISION 00-00-00 | DATE PLOTTED => 8/18/2022 | TIME PLOTTED => 10:09:42 AM

Dist	COUNTY	ROUTE	POST MILES TOTAL PROJECT	SHEET No.	TOTAL SHEETS
04	Sol	37	10.9		

REGISTERED CIVIL ENGINEER DATE

PLANS APPROVAL DATE

REGISTERED PROFESSIONAL ENGINEER No. Exp. CIVIL STATE OF CALIFORNIA

THE STATE OF CALIFORNIA OR ITS OFFICERS OR AGENTS SHALL NOT BE RESPONSIBLE FOR THE ACCURACY OR COMPLETENESS OF SCANNED COPIES OF THIS PLAN SHEET.

WMH CORPORATION
11070 WHITE ROCK RD
SUITE 140
RANCHO CORDOVA
CA 95670

SOLANO TRANSPORTATION AUTHORITY
1 HARBOR CENTER
SUITE 130
SUISUN CITY, CA 94585

PRELIMINARY PLANS SUBJECT TO REVISION

NOTE:

EXACT LOCATION AND POSITION OF SIGNS WILL BE DETERMINED BY THE ENGINEER.

STATIONARY MOUNTED CONSTRUCTION AREA SIGNS

SIGN No.	SIGN DESIGNATION	PANEL SIZE	SIGN MESSAGE OR REMARKS	No. OF POSTS AND SIZE	No. OF SIGNS
1	SPECIAL 1	72" x 48"	EAST 37 EXIT TO FAIRGROUNDS CLOSED	2 - 6" x 6"	1
	W20-2	48" x 48"	DETOUR AHEAD		
2	D3-1 (FAIRGROUNDS DRIVE)	VAR x 18"	STREET NAME (FAIRGROUNDS DRIVE)	1 - 4" x 4"	6
	SC3(CA)	48" x 18"	DETOUR WITH ARROW		
3	PCMS	115" x 80"	ADVANCE WARNING SIGN	-	2
4	SC6-4(CA)	48" x 60"	RAMP CLOSED (MORE THAN ONE DAY)	1 - 4" x 6"	4
5	G85-1 (FAIRGROUNDS)(CA)	VAR x 78"	EXIT DIRECTION (FAIRGROUNDS DR)	2 - 6" x 8"	1
	M4-8	30" x 15"	DETOUR		
6	M4-8a	24" x 18"	END DETOUR	1 - 4" x 4"	7
7	SPECIAL 2	48" x 48"	WEST 37 ENTRANCE CLOSED	2 - 6" x 6"	2
	W20-2	48" x 48"	DETOUR AHEAD		
8	M4-8	24" x 12"	DETOUR	1 - 4" x 6"	1
	G28-2 (37)(CA)	21" x 18"	ROUTE 37 MARKER		
	M3-4	24" x 12"	WEST		
	M6-3	21" x 15"	DIRECTIONAL ARROW		
9	G28-2 (37)(CA)	21" x 18"	ROUTE 37 MARKER	1 - 4" x 6"	9
	M3-4	24" x 12"	WEST		
	SC3(CA)	48" x 18"	DETOUR WITH ARROW		
10	G28-2 (37)(CA)	21" x 18"	ROUTE 37 MARKER	1 - 4" x 6"	7
	M3-4	24" x 12"	WEST		
	M4-10 (L)	48" x 18"	DETOUR WITH ARROW		
11	M4-8	30" x 15"	DETOUR	1 - 4" x 6"	6
	G28-2 (37)(CA)	21" x 18"	ROUTE 37 MARKER		
	M3-4	24" x 12"	WEST		
	M6-2	21" x 15"	DIRECTIONAL ARROW		
12	SPECIAL 3	48" x 48"	EAST 37 ENTRANCE CLOSED	2 - 6" x 6"	2
	W20-2	48" x 48"	DETOUR AHEAD		
13	M4-8	24" x 12"	DETOUR	1 - 4" x 6"	1
	G28-2 (37)(CA)	21" x 18"	ROUTE 37 MARKER		
	M3-2	24" x 12"	EAST		
	M6-3	21" x 15"	DIRECTIONAL ARROW		
14	G27-2 (80)(CA)	21" x 18"	ROUTE 80 MARKER	1 - 4" x 6"	3
	M3-4	24" x 12"	WEST		
	M3-2	24" x 12"	EAST		
	SC3(CA)	48" x 18"	DETOUR WITH ARROW		
15	G27-2 (80)(CA)	21" x 18"	ROUTE 80 MARKER	1 - 4" x 6"	1
	M3-4	24" x 12"	WEST		
	SC3(CA)	48" x 18"	DETOUR WITH ARROW		
	M3-2	24" x 12"	EAST		
	M4-10 (L)	48" x 18"	DETOUR WITH ARROW		
16	G27-2 (80)(CA)	21" x 18"	ROUTE 80 MARKER	1 - 4" x 4"	2
	M3-2	24" x 12"	EAST		
	M4-10 (L)	48" x 18"	DETOUR WITH ARROW		
17	M4-8	24" x 12"	DETOUR	1 - 4" x 4"	2
	G28-2 (37)(CA)	21" x 18"	ROUTE 37 MARKER		
	M3-2	24" x 12"	EAST		
	M6-2	21" x 15"	DIRECTIONAL ARROW		
18	G28-2 (37)(CA)	21" x 18"	ROUTE 37 MARKER	1 - 4" x 4"	1
	M3-2	24" x 12"	EAST		
	M4-10 (L)	48" x 18"	DETOUR WITH ARROW		

SPECIAL 1

EAST 37
EXIT
TO FAIRGROUNDS
CLOSED

72" x 48"

6"C CAPS

SPECIAL 2

WEST 37
ENTRANCE
CLOSED

48" x 48"

6"C CAPS

SPECIAL 3

EAST 37
ENTRANCE
CLOSED

48" x 48"

6"C CAPS

SPECIAL 4

WEST 37
EXIT
TO FAIRGROUNDS
CLOSED

72" x 48"

6"C CAPS

STATIONARY MOUNTED CONSTRUCTION AREA SIGNS

SIGN No.	SIGN DESIGNATION	PANEL SIZE	SIGN MESSAGE OR REMARKS	No. OF POSTS AND SIZE	No. OF SIGNS
19	SPECIAL 4	72" x 48"	WEST 37 EXIT TO FAIRGROUNDS CLOSED	2 - 6" x 6"	1
	W20-2	48" x 48"	DETOUR AHEAD		
20	M4-10(L)	48" x 18"	DETOUR WITH ARROW	1 - 4" x 4"	2
21	D3-1 (FAIRGROUNDS DRIVE)	VAR x 18"	STREET NAME (FAIRGROUNDS DRIVE)	1 - 4" x 4"	3
	M6-2	21" x 15"	DIRECTIONAL ARROW		
22	PCMS	80" x 56"	ADVANCE WARNING SIGN	-	4
23	G28-2 (37)(CA)	21" x 18"	ROUTE 37 MARKER	1 - 4" x 4"	1
	M3-4	24" x 12"	WEST		
	M4-10(R)	48" x 18"	DETOUR WITH ARROW		
24	D3-1 (FAIRGROUNDS DRIVE)	VAR x 18"	STREET NAME (FAIRGROUNDS DRIVE)	1 - 4" x 6"	2
	M3-3	24" x 12"	SOUTH		
	SC3(CA)	48" x 18"	DETOUR WITH ARROW		
25	D3-1 (FAIRGROUNDS DRIVE)	VAR x 18"	STREET NAME (FAIRGROUNDS DRIVE)	1 - 4" x 6"	3
	M3-3	24" x 12"	SOUTH		
	M4-10 (R)	48" x 18"	DETOUR WITH ARROW		
26	D3-1 (FAIRGROUNDS DRIVE)	VAR x 18"	STREET NAME (FAIRGROUNDS DRIVE)	1 - 4" x 6"	3
	M3-3	24" x 12"	SOUTH		
	M4-10 (L)	48" x 18"	DETOUR WITH ARROW		

MOTORIST INFORMATION PLAN

MI-1

REVISED BY	DATE REVISED
J.V.	02/15/22

JAMEY VALDIVIA — CARL GIBSON III

CALCULATED-DESIGNED BY — CHECKED BY

CONSULTANT FUNCTIONAL SUPERVISOR — CARL GIBSON III

STATE OF CALIFORNIA - DEPARTMENT OF TRANSPORTATION

Caltrans

X:\SR 37_FAIRGROUNDS DRIVE\000_CAD\Sheets\022-Motorist_Info\LB-Plans\044A4414Ib001.dgn

LAST REVISION 00-00-00 — DATE PLOTTED => 8/18/2022 TIME PLOTTED => 10:11:34 AM

Dist	COUNTY	ROUTE	POST MILES TOTAL PROJECT	SHEET No.	TOTAL SHEETS
04	Sol	37	10.9		

REGISTERED CIVIL ENGINEER DATE

PLANS APPROVAL DATE

REGISTERED PROFESSIONAL ENGINEER No. Exp. CIVIL STATE OF CALIFORNIA

THE STATE OF CALIFORNIA OR ITS OFFICERS OR AGENTS SHALL NOT BE RESPONSIBLE FOR THE ACCURACY OR COMPLETENESS OF SCANNED COPIES OF THIS PLAN SHEET.

WMH CORPORATION
11070 WHITE ROCK RD
SUITE 140
RANCHO CORDOVA
CA 95670

SOLANO TRANSPORTATION AUTHORITY
1 HARBOR CENTER
SUITE 130
SUISUN CITY, CA 94585

PRELIMINARY PLANS SUBJECT TO REVISION

NOTES:

1. EXACT LOCATION AND POSITION OF SIGNS WILL BE DETERMINED BY THE ENGINEER.
2. PCMS MUST BE INSTALLED AND TURNED ON SEVEN (7) DAYS PRIOR TO WEST 37 ENTRANCE CLOSURE. PCMS SHALL READ:

PHASE 1		PHASE 2
EAST 37 EXIT CLOSURE	→	DATE & TIME

3. DURING EAST 37 EXIT CLOSURE, PCMS SHALL READ:

PHASE 1		PHASE 2
EAST 37 EXIT CLOSURE	→	USE DETOUR

LEGEND:

- ROADSIDE SIGN ONE POST
- ROADSIDE SIGN TWO POST
- PCMS PORTABLE CHANGEABLE MESSAGE SIGN
- (No.) CONSTRUCTION AREA SIGN NUMBER
- ✳ PORTABLE FLASHING BEACON

DETOUR PLAN No. 1

EB ROUTE 37 OFF-RAMP DETOUR:

- CONTINUE ON EB ROUTE 37
- CONNECTOR OFF-RAMP TO WB ROUTE 80
- CONTINUE WB ROUTE 80
- OFF-RAMP TO REDWOOD St
- LEFT TO SB REDWOOD St
- LEFT TO NB ADMIRAL CALLAGHAN Ln
- ON-RAMP TO EB ROUTE 80
- EXIT TO WB ROUTE 37
- EXIT TO FAIRGROUNDS Dr

VALLEJO

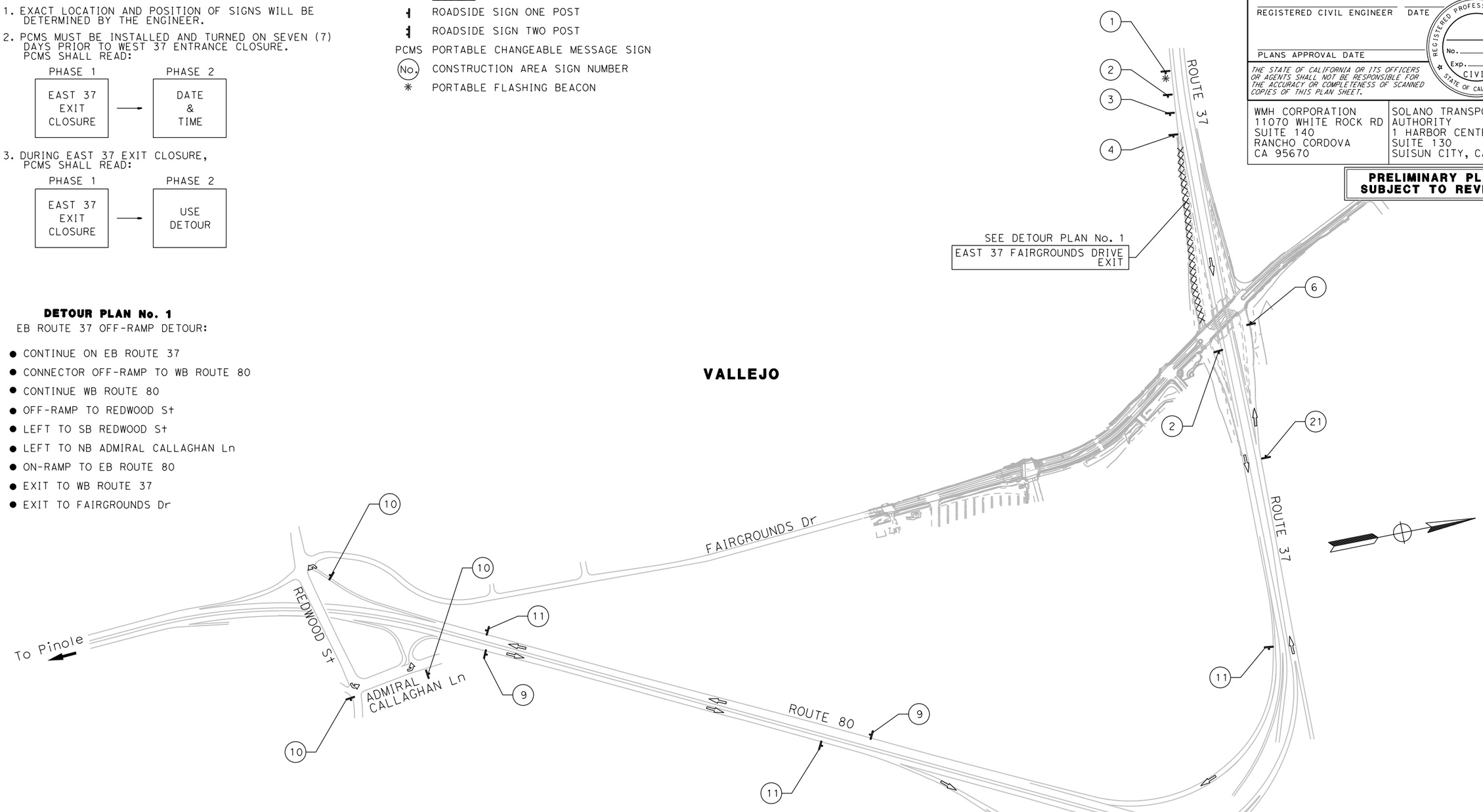

FOR NOTES AND LEGEND, SEE SHEET M-2

APPROVED FOR MOTORIST INFORMATION WORK ONLY

MOTORIST INFORMATION PLAN

NO SCALE

MI-2

REVISED BY	DATE REVISED
J.V.	02/15/22

JAMEY VALDIVIA — CARL GIBSON III

CALCULATED-DESIGNED BY — CHECKED BY

CONSULTANT FUNCTIONAL SUPERVISOR: CARL GIBSON III

STATE OF CALIFORNIA - DEPARTMENT OF TRANSPORTATION

X:\SR 37_FAIRGROUNDS DRIVE\000_CAD\Sheets\022-Motorist_Info\LB-Plans\044A44141b002.dgn

LAST REVISION 00-00-00 | DATE PLOTTED => 8/18/2022 | TIME PLOTTED => 10:12:08 AM

Dist	COUNTY	ROUTE	POST MILES TOTAL PROJECT	SHEET No.	TOTAL SHEETS
04	Sol	37	10.9		

REGISTERED CIVIL ENGINEER DATE

PLANS APPROVAL DATE

REGISTERED PROFESSIONAL ENGINEER No. Exp. CIVIL STATE OF CALIFORNIA

THE STATE OF CALIFORNIA OR ITS OFFICERS OR AGENTS SHALL NOT BE RESPONSIBLE FOR THE ACCURACY OR COMPLETENESS OF SCANNED COPIES OF THIS PLAN SHEET.

WMH CORPORATION
11070 WHITE ROCK RD
SUITE 140
RANCHO CORDOVA
CA 95670

SOLANO TRANSPORTATION AUTHORITY
1 HARBOR CENTER
SUITE 130
SUISUN CITY, CA 94585

PRELIMINARY PLANS SUBJECT TO REVISION

NOTES:

1. EXACT LOCATION AND POSITION OF SIGNS WILL BE DETERMINED BY THE ENGINEER.
2. PCMS MUST BE INSTALLED AND TURNED ON SEVEN (7) DAYS PRIOR TO WEST 37 ENTRANCE CLOSURE. PCMS SHALL READ:

PHASE 1		PHASE 2
WEST 37 ENTRANCE CLOSURE	→	DATE & TIME

3. DURING WEST 37 ENTRANCE CLOSURE, PCMS SHALL READ:

PHASE 1		PHASE 2
WEST 37 ENTRANCE CLOSURE	→	USE DETOUR

DETOUR PLAN No. 2

SB FAIRGROUNDS Dr
DETOUR TO WB ROUTE 37:

- CONTINUE ON SB FAIRGROUNDS Dr
- LEFT TO SB REDWOOD St
- LEFT TO NB ADMIRAL CALLAGHAN Ln
- ON-RAMP TO EB ROUTE 80
- EXIT TO WB ROUTE 37

NB FAIRGROUNDS Dr
DETOUR TO WB ROUTE 37:

- ON-RAMP TO EB ROUTE 37
- CONNECTOR OFF-RAMP TO WB ROUTE 80
- EXIT TO REDWOOD St
- LEFT TO SB REDWOOD St
- LEFT TO NB ADMIRAL CALLAGHAN Ln
- ON-RAMP TO EB ROUTE 80
- EXIT TO WB ROUTE 37

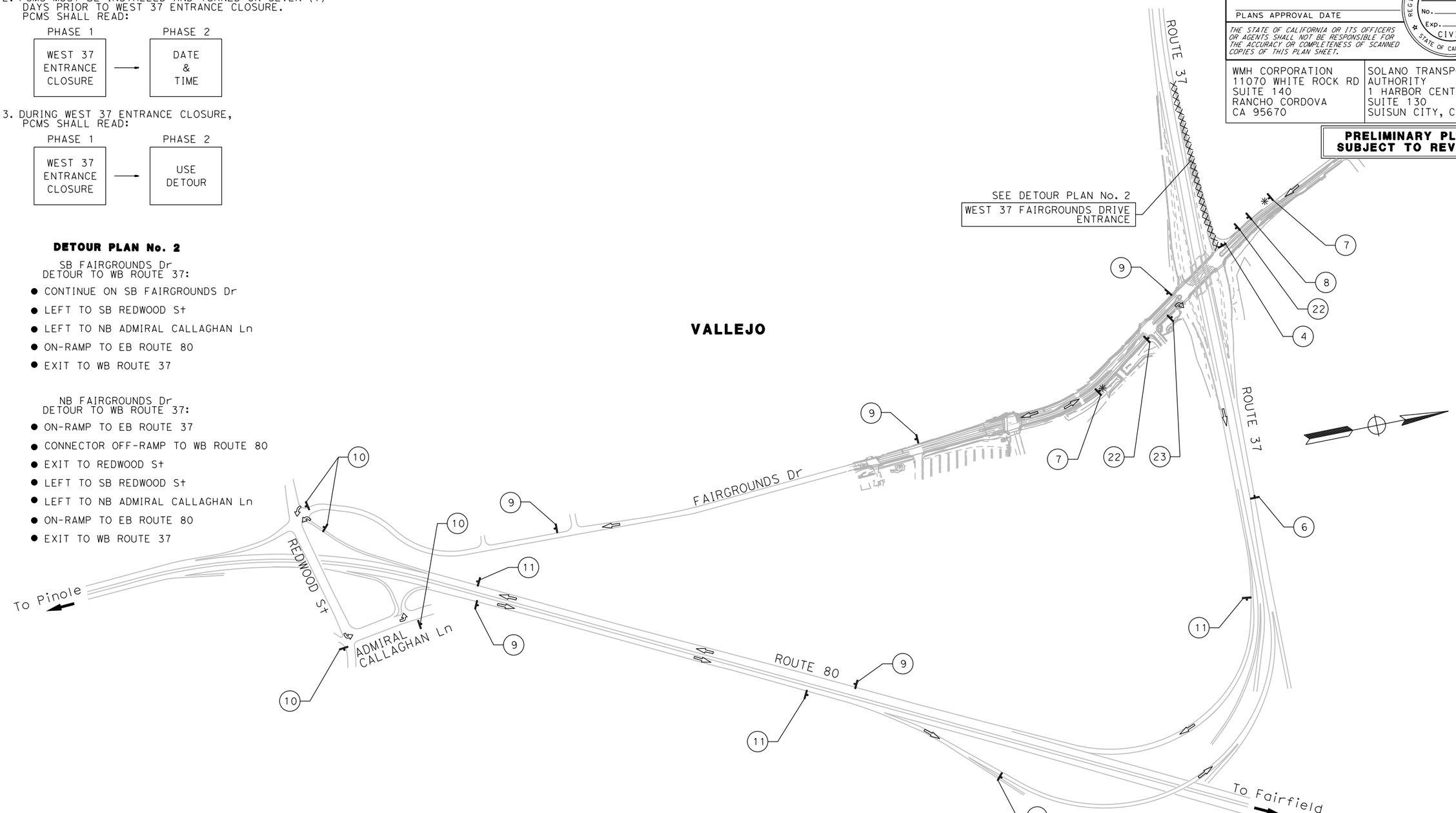

FOR NOTES AND LEGEND, SEE SHEET M-2

APPROVED FOR MOTORIST INFORMATION WORK ONLY

MOTORIST INFORMATION PLAN

NO SCALE

MI-3

REVISED BY	DATE REVISED
J.V.	02/15/22

JAMEY VALDIVIA — CALCULATED-DESIGNED BY
CARL GIBSON III — CHECKED BY
CARL GIBSON III — CONSULTANT FUNCTIONAL SUPERVISOR

STATE OF CALIFORNIA - DEPARTMENT OF TRANSPORTATION
Caltrans

X:\SR 37_FAIRGROUNDS DRIVE\000_CAD\Sheets\022-Motorist_Info\LB-Plans\044A44141b003.dgn

LAST REVISION 00-00-00
DATE PLOTTED => 8/18/2022
TIME PLOTTED => 10:12:32 AM

Dist	COUNTY	ROUTE	POST MILES TOTAL PROJECT	SHEET No.	TOTAL SHEETS
04	Sol	37	10.9		

REGISTERED CIVIL ENGINEER DATE

PLANS APPROVAL DATE

REGISTERED PROFESSIONAL ENGINEER No. Exp. CIVIL STATE OF CALIFORNIA

THE STATE OF CALIFORNIA OR ITS OFFICERS OR AGENTS SHALL NOT BE RESPONSIBLE FOR THE ACCURACY OR COMPLETENESS OF SCANNED COPIES OF THIS PLAN SHEET.

WMH CORPORATION
11070 WHITE ROCK RD
SUITE 140
RANCHO CORDOVA
CA 95670

SOLANO TRANSPORTATION AUTHORITY
1 HARBOR CENTER
SUITE 130
SUISUN CITY, CA 94585

PRELIMINARY PLANS SUBJECT TO REVISION

NOTES:

1. EXACT LOCATION AND POSITION OF SIGNS WILL BE DETERMINED BY THE ENGINEER.
2. PCMS MUST BE INSTALLED AND TURNED ON SEVEN (7) DAYS PRIOR TO EAST 37 ENTRANCE CLOSURE. PCMS SHALL READ:

PHASE 1		PHASE 2
EAST 37 ENTRANCE CLOSURE	→	DATE & TIME

3. DURING EAST 37 ENTRANCE CLOSURE, PCMS SHALL READ:

PHASE 1		PHASE 2
EAST 37 ENTRANCE CLOSURE	→	USE DETOUR

DETOUR PLAN No. 3

NB FAIRGROUNDS Dr DETOUR:

- ON-RAMP TO WB ROUTE 37
- EXIT TO SB ROUTE 29
- CONTINUE SB ROUTE 29
- ON-RAMP TO EB ROUTE 37

SB FAIRGROUNDS Dr DETOUR TO WB ROUTE 80:

- CONTINUE SB FAIRGROUNDS Dr
- ON-RAMP TO WB ROUTE 80

SB FAIRGROUNDS Dr DETOUR TO EB ROUTE 80:

- CONTINUE SB FAIRGROUNDS Dr
- LEFT TO SB REDWOOD St
- LEFT TO NB ADMIRAL CALLAGHAN Ln
- ON-RAMP TO EB ROUTE 80

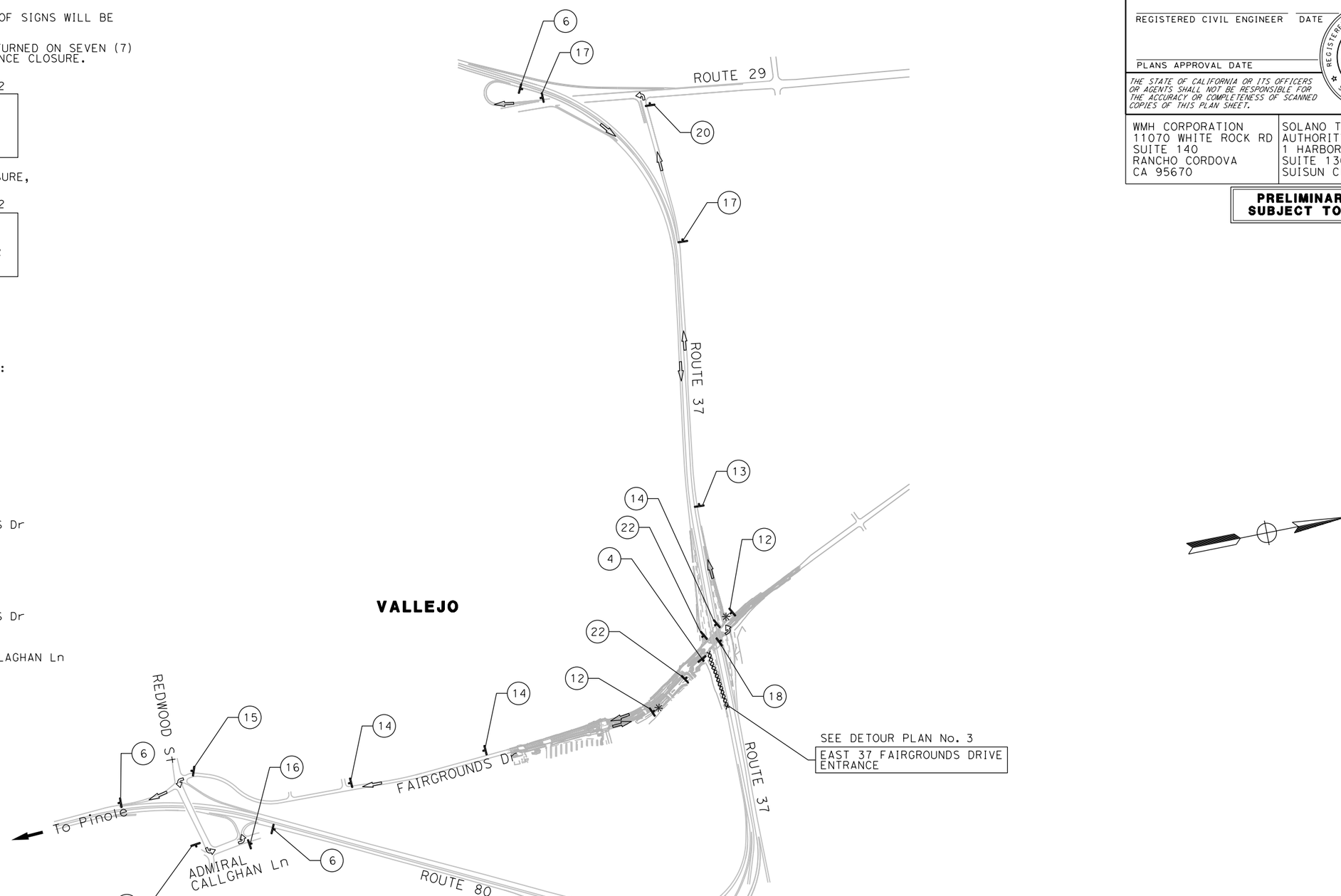

FOR NOTES AND LEGEND, SEE SHEET M-2

APPROVED FOR MOTORIST INFORMATION WORK ONLY

MOTORIST INFORMATION PLAN

NO SCALE

MI-4

REVISED BY	DATE REVISED
J.V.	02/15/22

JAMEY VALDIVIA — CARL GIBSON III

CALCULATED-DESIGNED BY — CHECKED BY

CONSULTANT FUNCTIONAL SUPERVISOR — CARL GIBSON III

STATE OF CALIFORNIA - DEPARTMENT OF TRANSPORTATION

Caltrans

X:\SR 37_FAIRGROUNDS DRIVE\000_CAD\Sheets\022-Motorist_Info\LB-Plans\044A4414lb004.dgn

LAST REVISION 00-00-00 — DATE PLOTTED => 8/18/2022 — TIME PLOTTED => 10:12:58 AM

Dist	COUNTY	ROUTE	POST MILES TOTAL PROJECT	SHEET No.	TOTAL SHEETS
04	Sol	37	10.9		

REGISTERED CIVIL ENGINEER DATE

PLANS APPROVAL DATE

REGISTERED PROFESSIONAL ENGINEER No. Exp. CIVIL STATE OF CALIFORNIA

THE STATE OF CALIFORNIA OR ITS OFFICERS OR AGENTS SHALL NOT BE RESPONSIBLE FOR THE ACCURACY OR COMPLETENESS OF SCANNED COPIES OF THIS PLAN SHEET.

WMH CORPORATION
11070 WHITE ROCK RD
SUITE 140
RANCHO CORDOVA
CA 95670

SOLANO TRANSPORTATION AUTHORITY
1 HARBOR CENTER
SUITE 130
SUISUN CITY, CA 94585

PRELIMINARY PLANS SUBJECT TO REVISION

NOTES:

1. EXACT LOCATION AND POSITION OF SIGNS WILL BE DETERMINED BY THE ENGINEER.
2. PCMS MUST BE INSTALLED AND TURNED ON SEVEN (7) DAYS PRIOR TO WEST 37 EXIT CLOSURE. PCMS SHALL READ:

PHASE 1		PHASE 2
WEST 37 EXIT CLOSURE	→	DATE & TIME

3. DURING WEST 37 EXIT CLOSURE, PCMS SHALL READ:

PHASE 1		PHASE 2
WEST 37 EXIT CLOSURE	→	USE DETOUR

DETOUR PLAN No. 4

WB ROUTE 37 OFF-RAMP DETOUR:

- CONTINUE WB ROUTE 37
- EXIT TO SB ROUTE 29
- CONTINUE SB ROUTE 29
- ON-RAMP TO EB ROUTE 37
- CONTINUE EB ROUTE 37
- EXIT TO FAIRGROUNDS Dr

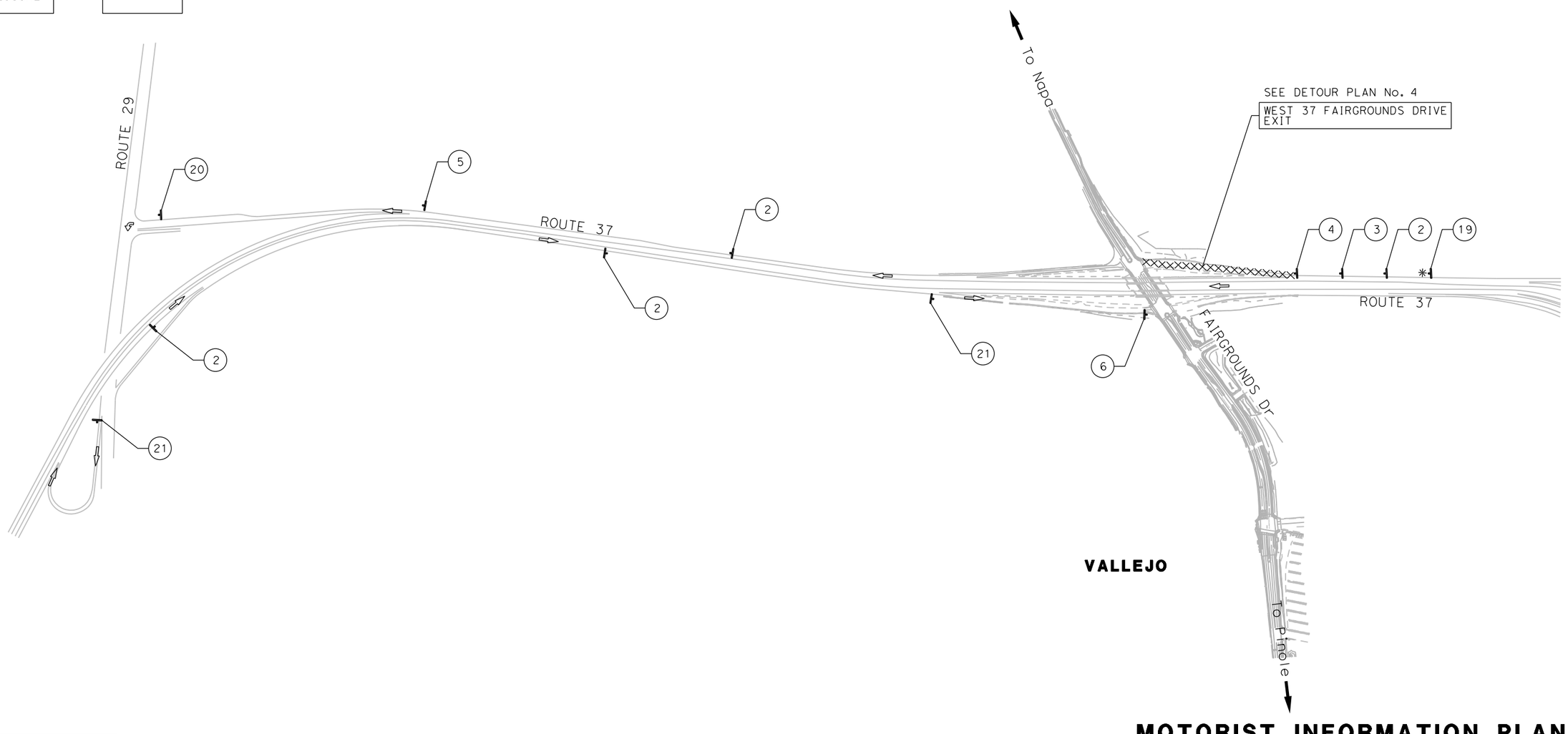

FOR NOTES AND LEGEND, SEE SHEET M-2

APPROVED FOR MOTORIST INFORMATION WORK ONLY

MOTORIST INFORMATION PLAN

NO SCALE

MI-5

REVISED BY	DATE REVISED
J.V.	02/15/22

JAMEY VALDIVIA — CALCULATED-DESIGNED BY
CARL GIBSON III — CHECKED BY
CARL GIBSON III — CONSULTANT FUNCTIONAL SUPERVISOR

STATE OF CALIFORNIA - DEPARTMENT OF TRANSPORTATION

X:\SR 37_FAIRGROUNDS DRIVE\000_CAD\Sheets\022-Motorist_Info\LB-Plans\044A4414Ib005.dgn

LAST REVISION 00-00-00 | DATE PLOTTED => 8/18/2022 | TIME PLOTTED => 10:13:22 AM

Dist	COUNTY	ROUTE	POST MILES TOTAL PROJECT	SHEET No.	TOTAL SHEETS
04	Sol	37	10.9		

REGISTERED CIVIL ENGINEER DATE

PLANS APPROVAL DATE

REGISTERED PROFESSIONAL ENGINEER No. Exp. CIVIL STATE OF CALIFORNIA

THE STATE OF CALIFORNIA OR ITS OFFICERS OR AGENTS SHALL NOT BE RESPONSIBLE FOR THE ACCURACY OR COMPLETENESS OF SCANNED COPIES OF THIS PLAN SHEET.

WMH CORPORATION
11070 WHITE ROCK RD
SUITE 140
RANCHO CORDOVA
CA 95670

SOLANO TRANSPORTATION AUTHORITY
1 HARBOR CENTER
SUITE 130
SUISUN CITY, CA 94585

PRELIMINARY PLANS SUBJECT TO REVISION

NOTE:

EXACT LOCATION AND POSITION OF SIGNS WILL BE DETERMINED BY THE ENGINEER.

DETOUR PLAN No. 5

LEFT TURN LANES FROM GATEWAY Dr TO SB FAIRGROUNDS Dr:

- CONTINUE NB ON GRIFFIN Rd
- CONTINUE WB ON TAPER Ave
- LEFT TO FAIRGROUNDS Dr

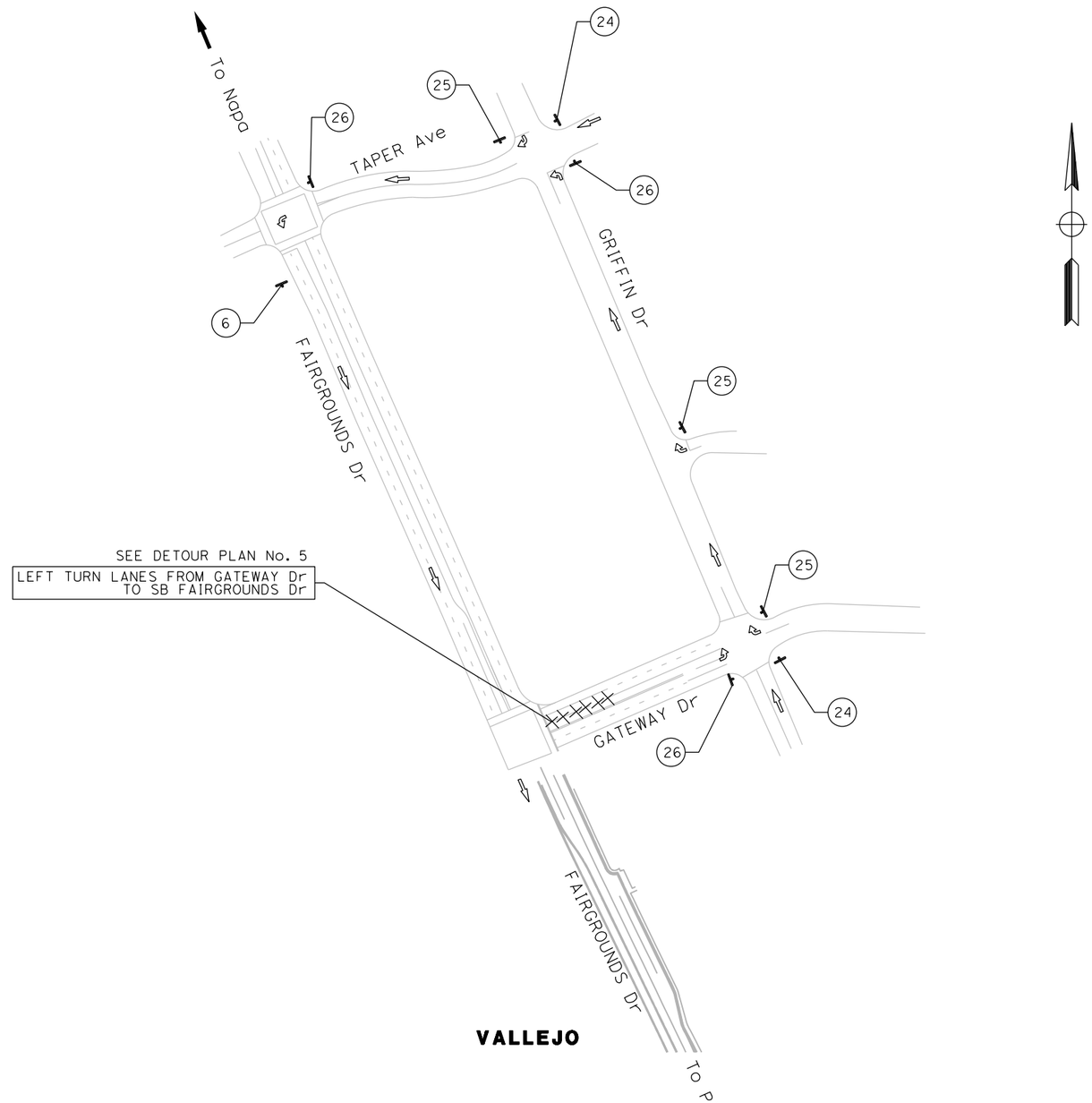

FOR NOTES AND LEGEND, SEE SHEET M-2

APPROVED FOR MOTORIST INFORMATION WORK ONLY

MOTORIST INFORMATION PLAN

NO SCALE

MI-6

REVISED BY	DATE REVISED
J.V.	02/15/22

JAMEY VALDIVIA — CARL GIBSON III

CALCULATED-DESIGNED BY — CHECKED BY

CONSULTANT FUNCTIONAL SUPERVISOR — CARL GIBSON III

STATE OF CALIFORNIA - DEPARTMENT OF TRANSPORTATION

Caltrans

X:\SR 37_FAIRGROUNDS DRIVE\000_CAD\Sheets\022-Motorist_Info\LB-Plans\044A44141b006.dgn

LAST REVISION 00-00-00 — DATE PLOTTED => 8/18/2022 — TIME PLOTTED => 10:13:49 AM

Dist	COUNTY	ROUTE	POST MILES TOTAL PROJECT	SHEET No.	TOTAL SHEETS
04	Sol	37	10.9		

REGISTERED CIVIL ENGINEER DATE

PLANS APPROVAL DATE

REGISTERED PROFESSIONAL ENGINEER No. Exp. CIVIL STATE OF CALIFORNIA

THE STATE OF CALIFORNIA OR ITS OFFICERS OR AGENTS SHALL NOT BE RESPONSIBLE FOR THE ACCURACY OR COMPLETENESS OF SCANNED COPIES OF THIS PLAN SHEET.

WMH CORPORATION
11070 WHITE ROCK RD
SUITE 140
RANCHO CORDOVA
CA 95670

SOLANO TRANSPORATION AUTHORITY
1 HARBOR CENTER
SUITE 130
SUISUN CITY, CA 94585

PRELIMINARY PLANS SUBJECT TO REVISION

CONSTRUCTION AREA SIGN QUANTITIES

SHEET No.	EACH	SIGN DESIGNATION FEDERAL	SIGN DESIGNATION CALIFORNIA	PANEL SIZE (L x D) INCH x INCH	SIGN AREA (N) SQFT	SINGLE FACED	BACKGROUND SHEETING COLOR	BACKGROUND RETROREFLECTIVE ASTM TYPE	LEGEND SHEETING COLOR	LEGEND RETROREFLECTIVE ASTM TYPE	ROADSIDE FURNISH SINGLE SHEET ALUMINUM (0.08" - UNFRAMED) (N) SQFT	DESCRIPTION (REMARKS)
CS-1	4	W20-1		30" x 30"	6.3	X	ORANGE	XI	BLACK	-	25.0	ROAD WORK AHEAD
	3		C40(CA)	108" x 42"	31.5	X	WHITE	XI	BLACK	-	94.5	TRAFFIC FINES DOUBLED IN CONSTRUCTION ZONES
	5	G20-5aP		24" x 18"	3.0	X	ORANGE	XI	BLACK	-	15.0	WORK ZONE
	6	R2-1		24" x 30"	5.0	X	WHITE	XI	BLACK	-	30.0	SPEED LIMIT (25)
	5	RADAR SPEED TRAILERS				X	-	-	-	-	0.0	YOUR SPEED XX
	3	SPECIAL		154" x 100"	106.9	X	WHITE	XI	BLACK	-	320.8	CONSTRUCTION PROJECT FUNDING SIGN
	4	G20-2		30" x 18"	3.8	X	ORANGE	XI	BLACK	-	15.0	END ROAD WORK
	2		C23(CA)	30" x 30"	6.3	X	ORANGE	XI	BLACK	-	12.5	RAMP WORK AHEAD
	1	R2-11		24" x 30"	5.0	X	WHITE	XI	BLACK	-	5.0	END DOUBLE FINES ZONE
TOTAL					167.7						517.8	

(N) - NOT A SEPARATE BID ITEM

MOTORIST INFORMATION QUANTITIES

SHEET No. MI-2	MI-3	MI-4	MI-5	M-6	SIGN DESIGNATION FEDERAL	SIGN DESIGNATION CALIFORNIA	PANEL SIZE (L x D) INCH x INCH	SIGN AREA (N) SQFT	SINGLE FACED	BACKGROUND SHEETING COLOR	BACKGROUND RETROREFLECTIVE ASTM TYPE	LEGEND SHEETING COLOR	LEGEND RETROREFLECTIVE ASTM TYPE	ROADSIDE FURNISH SINGLE SHEET ALUMINUM (0.08" - UNFRAMED) (N) SQFT	DESCRIPTION (REMARKS)
EA	EA	EA	EA	EA											
1					SPECIAL 1		72" x 48"	24.0	X	ORANGE	XI	BLACK	-	24.0	EAST 37 EXIT TO FAIRGROUNDS CLOSED
1	2	2	1		W20-2		48" x 48"	16.0	X	ORANGE	XI	BLACK	-	96.0	DETOUR AHEAD
3			6	8	D3-1		VAR x 18"	-	X	GREEN	XI	WHITE	-	-	STREET NAME (FAIRGROUNDS DRIVE)
5	6	4	4	2		SC3(CA)	48" x 18"	6.0	X	ORANGE	XI	BLACK	-	126.0	DETOUR WITH ARROW
1			1		PCMS		115" x 80"	63.9		-	-	-	-	-	ADVANCE WARNING SIGN
	2	2			PCMS		80" x 56"	31.1		-	-	-	-	-	ADVANCE WARNING SIGN
1	1	1	1			SC6-4(CA)	48" x 60"	20.0	X	ORANGE	XI	BLACK	-	80.0	RAMP CLOSED (MORE THAN ONE DAY)
1			1			G85-1(CA)	VAR x 78"	-	X	GREEN	XI	WHITE	-	-	EXIT DIRECTION (FAIRGROUNDS DRIVE)
2	4	3	1		M4-8		24" x 12"	2.0	X	ORANGE	XI	BLACK	-	20.0	DETOUR
	1		1	3	M4-10(R)		48" x 18"	6.0	X	ORANGE	XI	BLACK	-	30.0	DETOUR WITH ARROW
1	1	3	1	1	M4-8a		24" x 18"	3.0	X	ORANGE	XI	BLACK	-	21.0	END DETOUR
	2				SPECIAL 2		48" x 48"	16.0	X	ORANGE	XI	BLACK	-	32.0	WEST 37 ENTRANCE CLOSED
9	15	4				G28-2(CA)	21" x 18"	2.6	X	GREEN	XI	WHITE	-	73.5	INTERSTATE ROUTE MARKER 37
9	15	4			M3-4		24" x 12"	2.0	X	WHITE	XI	BLACK	-	56.0	WEST
	1	1			M6-3		21" x 15"	2.2	X	WHITE	XI	BLACK	-	4.4	DIRECTIONAL ARROW
3	4	5	1	3	M4-10(L)		48" x 18"	6.0	X	ORANGE	XI	BLACK	-	96.0	DETOUR WITH ARROW
4	3	2	1		M6-2		21" x 15'	2.2	X	WHITE	XI	BLACK	-	21.9	DIRECTIONAL ARROW
		2			SPECIAL 3		48" x 48"	16.0	X	ORANGE	XI	BLACK	-	32.0	EAST 37 ENTRANCE CLOSED
		10			M3-2		24" x 12"	2.0	X	WHITE	XI	BLACK	-	20.0	EAST
				8	M3-3		24" x 12"	2.0	X	WHITE	XI	BLACK	-	16.0	SOUTH
		6				G27-2(CA)	21" x 18"	2.6	X	BLUE/RED	XI	WHITE	-	15.8	INTERSTATE ROUTE MARKER 80
			1		SPECIAL 4		72" x 48"	24.0	X	ORANGE	XI	BLACK	-	24.0	WEST 37 EXIT TO FAIRGROUNDS CLOSED
TOTAL								249.6						788.5	

MOTORIST INFORMATION QUANTITIES

MIQ-1

REVISED BY	DATE REVISED
J.V.	02/15/22

JAMEY VALDIVIA — CARL GIBSON III — CALCULATED-DESIGNED BY — CHECKED BY

CARL GIBSON III — CONSULTANT FUNCTIONAL SUPERVISOR

STATE OF CALIFORNIA - DEPARTMENT OF TRANSPORTATION

Caltrans

X:\SR 37_FAIRGROUNDS DRIVE\000_CAD\Sheets\022-Motorist_Info\LD-Quantities\044A4414Id001.dgn

LAST REVISION 00-00-00 | DATE PLOTTED => 2/10/2022 | TIME PLOTTED => 4:57:07 PM

Dist	COUNTY	ROUTE	POST MILES TOTAL PROJECT	SHEET No.	TOTAL SHEETS
04	Sol	37	10.9		

REGISTERED CIVIL ENGINEER DATE

PLANS APPROVAL DATE

REGISTERED PROFESSIONAL ENGINEER No. Exp. CIVIL STATE OF CALIFORNIA

THE STATE OF CALIFORNIA OR ITS OFFICERS OR AGENTS SHALL NOT BE RESPONSIBLE FOR THE ACCURACY OR COMPLETENESS OF SCANNED COPIES OF THIS PLAN SHEET.

WMH CORPORATION
11070 WHITE ROCK RD
SUITE 140
RANCHO CORDOVA
CA 95670

SOLANO TRANSPORTATION AUTHORITY
1 HARBOR CENTER
SUITE 130
SUISUN CITY, CA 94585

PRELIMINARY PLANS SUBJECT TO REVISION

NOTES:

1. FOR ACCURATE RIGHT OF WAY DATA, CONTACT RIGHT OF WAY ENGINEERING AT THE DISTRICT OFFICE.
2. UNLESS OTHERWISE NOTED, ALL TRAFFIC LANES MUST BE 12' WIDE.
3. ALL EXISTING SIGNS IN CONFLICT WITH TRAFFIC HANDLING PLAN MUST BE COVERED OR REMOVED AS DIRECTED BY THE ENGINEER.
4. ALL CHANNELIZERS AND TRAFFIC CONES TO BE SPACED AT 50' UNLESS OTHERWISE NOTED.
5. UNLESS OTHERWISE NOTED, ALL APPROACH ENDS OF TEMPORARY RAILING (TYPE K) SHALL BE EITHER TAPERED 10:1 OR FLATTER WITH A 15 Ft MINIMUM OFFSET FROM ETW, PLACED BEHIND EXISTING RAILING OR BARRIER, OR PROTECTED BY TEMPORARY CRASH CUSHION.
6. PLACE CB MARKERS ON ALL TEMPORARY RAILING (TYPE K)
7. LOCATIONS OF SIGNS ARE APPROXIMATE. EXACT LOCATIONS TO BE DETERMINED BY THE ENGINEER.
8. MODIFICATION OF DRAINAGE SYSTEMS MAY BE NECESSARY TO PROVIDE TEMPORARY DRAINAGE.
9. CONTRACTOR TO VERIFY ALL SAWCUT LOCATIONS PRIOR TO CONSTRUCTING CRCP OR JPCP TO CONFIRM JOINT LOCATIONS ARE AT LEAST 1' AWAY FROM TEMPORARY RAILING (TYPE K).
10. CONTRACTOR SHALL REPLACE MATERIAL REMOVED DUE TO TEMPORARY SIGNAL RELOCATION OR REMOVAL.
11. SIGNS SHOWN WITHIN WORK AREA MUST BE PLACE ON TEMPORARY PLATFORM SUPPORTS.
12. REDUCED SPEED LIMIT CONSTRUCTION WORK ZONE SIGNAGE MAY BE IMPLEMENTED PRIOR TO THE INSTALLATION OF THE PVSFS/RSFS (IF UNAVAILABLE); HOWEVER, ONCE PVSFS/RSFS ARE PROCURED, THEY MUST BE INSTALLED ON THE PROJECT AS SOON AS POSSIBLE.
13. ADDITIONAL SIGNS MAY BE INSTALLED ON THE MAINLINE, RAMPS AND OTHER LOCATIONS, AS DETERMINED BY THE ENGINEER.

LEGEND:

- CONSTRUCT THIS STAGE
- CONSTRUCT TEMPORARY PAVEMENT
- (X) CONSTRUCTION ITEM No.
- X TRAFFIC ITEM No.
- XXX TEMPORARY TRAFFIC STRIPE (PAINT) LINE DETAIL
- XXXXX CONSTRUCTION AREA SIGN CODE
- SINGLE SIGN POST
- TWO POST SIGN
- BK Beg Temp RAILING (TYPE K)
- EK END Temp RAILING (TYPE K)
- PORTABLE DELINEATORS
- TEMPORARY CRASH CUSHION SAND FILLED
- ALTERNATIVE TEMPORARY CRASH CUSHION
- TYPE III BARRICADE
- PCMS (PORTABLE CHANGEABLE MESSAGE SIGN)
- 12" LIMIT LINE
- TEMPORARY PEDESTRIAN PATH
- REMOVE TEMPORARY PEDESTRIAN PATH
- —x x—TCE—x x— TEMPORARY CONSTRUCTION EASEMENT

ABBREVIATIONS:

PPS	PLACED PREVIOUS STAGE
PVSFS	PORTABLE VEHICLE SPEED FEEDBACK SIGN
RSFS	RADAR SPEED FEEDBACK SIGN
TCC(TXXX)	TEMPORARY CRASH CUSHION SAND FILLED (ARRAY TYPE)
ATCC	ALTERNATIVE TEMPORARY CRASH CUSHION

STAGE CONSTRUCTION AND TRAFFIC HANDLING PLAN

PROJECT NOTES

SC-1

REVISED BY	DATE REVISED
R.L.	02/15/22

CALCULATED-DESIGNED BY: RALEIGH LANGSTON
CHECKED BY: CARL GIBSON III
CONSULTANT FUNCTIONAL SUPERVISOR: CARL GIBSON III

STATE OF CALIFORNIA - DEPARTMENT OF TRANSPORTATION
Caltrans

X:\SR 37_FAIRGROUNDS DRIVE\000_CAD\Sheets\023-Stg_Cont\MA-Plans\Stage 1\044A4414ma001.dgn

LAST REVISION 00-00-00 | DATE PLOTTED => 9/2/2022 TIME PLOTTED => 12:50:11 PM

Dist	COUNTY	ROUTE	POST MILES TOTAL PROJECT	SHEET No.	TOTAL SHEETS
04	Sol	37	10.9		

REGISTERED CIVIL ENGINEER DATE

PLANS APPROVAL DATE

REGISTERED PROFESSIONAL ENGINEER No. Exp. CIVIL STATE OF CALIFORNIA

THE STATE OF CALIFORNIA OR ITS OFFICERS OR AGENTS SHALL NOT BE RESPONSIBLE FOR THE ACCURACY OR COMPLETENESS OF SCANNED COPIES OF THIS PLAN SHEET.

WMH CORPORATION
11070 WHITE ROCK RD
SUITE 140
RANCHO CORDOVA
CA 95670

SOLANO TRANSPORTATION AUTHORITY
1 HARBOR CENTER
SUITE 130
SUISUN CITY, CA 94585

PRELIMINARY PLANS SUBJECT TO REVISION

NOTE:

FOR ACCURATE RIGHT OF WAY DATA, CONTACT RIGHT OF WAY ENGINEERING AT THE DISTRICT OFFICE.

STAGE 1 CONSTRUCTION:

1. CONSTRUCT ROADWAY WIDENING AND SIDEWALK
2. REPLACE ISLAND WITH TEMPORARY PAVEMENT MATCHING EXISTING FINISHED GRADE
   TEMPORARY PAVEMENT STRUCTURAL SECTION:
   0.75' HMA (TYPE A)
   SUBGRADE ENHANCEMENT GEOTEXTILE (CLASS B2)
3. CONSTRUCT TEMPORARY PEDESTRIAN PATH FOR STAGE 1 ONLY. REMOVE EXISTING HMA DIKES WITHIN LIMITS OF PATH. REMOVE PATH AFTER STAGE 1 IS COMPLETE.
4. MODIFY PARKING LOT MEDIANS. SEE CONSTRUCTION DETAILS.
5. CONSTRUCT PROPOSED DRAINAGE.

STAGE 1 TRAFFIC:

1. MAINTAIN EXISTING TRAFFIC LANES
2. MAINTAIN 2 NB LANES OF TRAFFIC
3. MAINTAIN EXISTING THROUGH LANES, 2 TURNING LANES
4. NB BIKES TO SHARE LANE WITH VEHICLES
5. PEDESTRIAN TRAFFIC PROHIBITED ON EAST SIDE OF FAIRGROUNDS
6. CONTROLLED BY EXISTING TRAFFIC SIGNAL
7. CONTROLLED BY TEMPORARY TRAFFIC SIGNAL
8. HOTEL TO BE ACCESSED FROM SAGE STREET DRIVEWAY

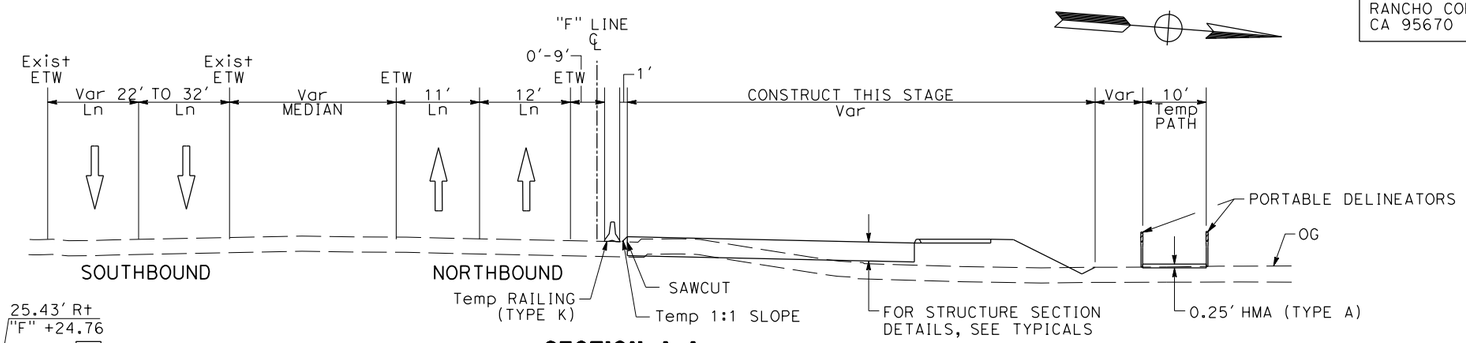

SECTION A-A

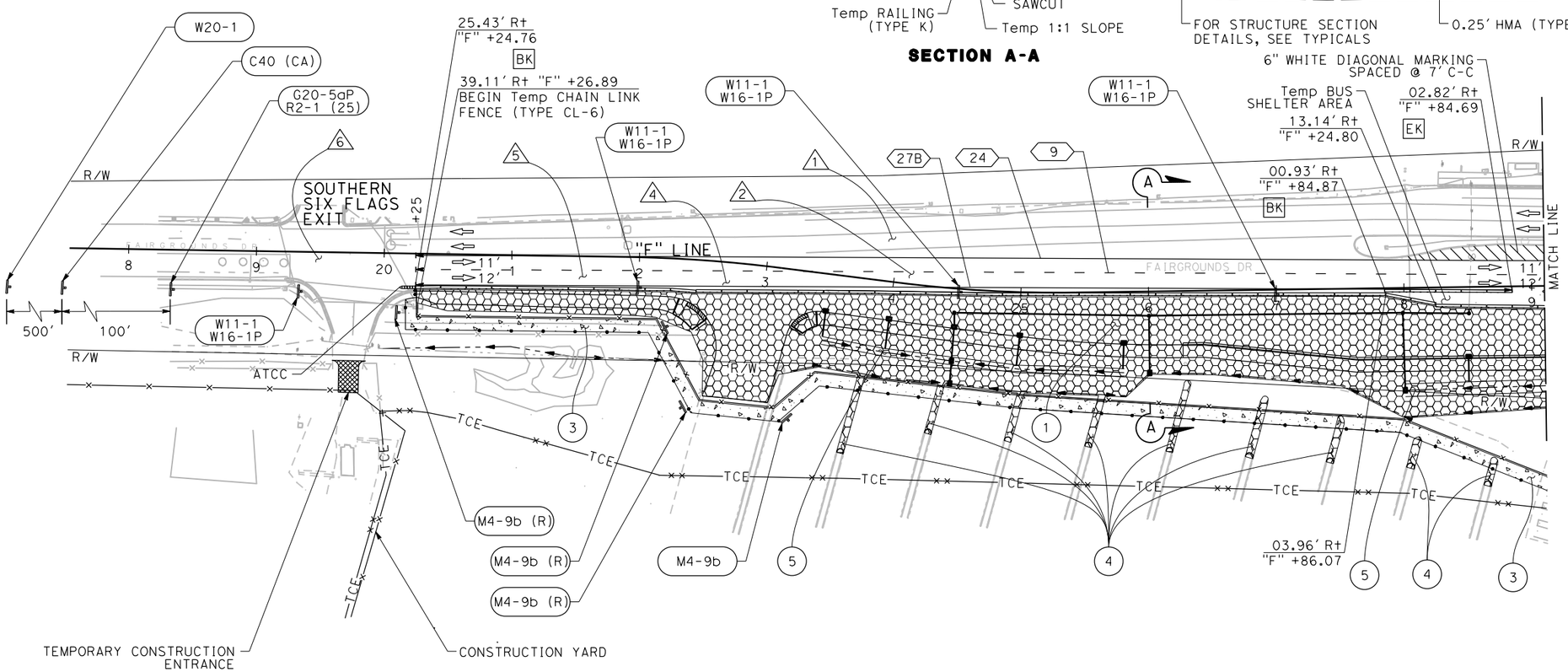

FOR NOTES, ABBREVIATIONS AND LEGEND, SEE SHEET SC-1

APPROVED FOR STAGE CONSTRUCTION WORK ONLY

STAGE CONSTRUCTION AND TRAFFIC HANDLING PLAN STAGE 1

SCALE: 1" = 50'

SC-2

REVISED BY	DATE REVISED
R.L.	02/15/22

CALCULATED-DESIGNED BY: RALEIGH LANGSTON
CHECKED BY: CARL GIBSON III
CONSULTANT FUNCTIONAL SUPERVISOR: CARL GIBSON III

STATE OF CALIFORNIA - DEPARTMENT OF TRANSPORTATION

X:\SR 37_FAIRGROUNDS DRIVE\000_CAD\Sheets\023-Stg_Cont\MA-Plans\Stage 1\044A4414ma002.dgn

LAST REVISION 00-00-00 | DATE PLOTTED => 9/2/2022 | TIME PLOTTED => 12:50:52 PM

Dist	COUNTY	ROUTE	POST MILES TOTAL PROJECT	SHEET No.	TOTAL SHEETS
04	Sol	37	10.9		

REGISTERED CIVIL ENGINEER DATE

PLANS APPROVAL DATE

REGISTERED PROFESSIONAL ENGINEER No. Exp. CIVIL STATE OF CALIFORNIA

THE STATE OF CALIFORNIA OR ITS OFFICERS OR AGENTS SHALL NOT BE RESPONSIBLE FOR THE ACCURACY OR COMPLETENESS OF SCANNED COPIES OF THIS PLAN SHEET.

WMH CORPORATION
11070 WHITE ROCK RD
SUITE 140
RANCHO CORDOVA
CA 95670

SOLANO TRANSPORTATION AUTHORITY
1 HARBOR CENTER
SUITE 130
SUISUN CITY, CA 94585

PRELIMINARY PLANS SUBJECT TO REVISION

NOTES:

1. FOR ACCURATE RIGHT OF WAY DATA, CONTACT RIGHT OF WAY ENGINEERING AT THE DISTRICT OFFICE.
2. CONSTRUCT DRAINAGE PIPES, MAINTAIN AT LEAST 1 LANE OF TRAFFIC AT ALL TIMES.
3. AS FIRST ORDER OF WORK, CONSTRUCT CURB RAMP. SEE DETAILS.

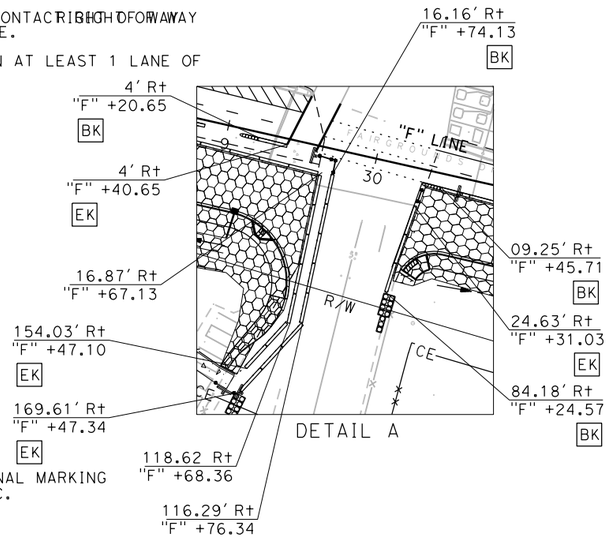

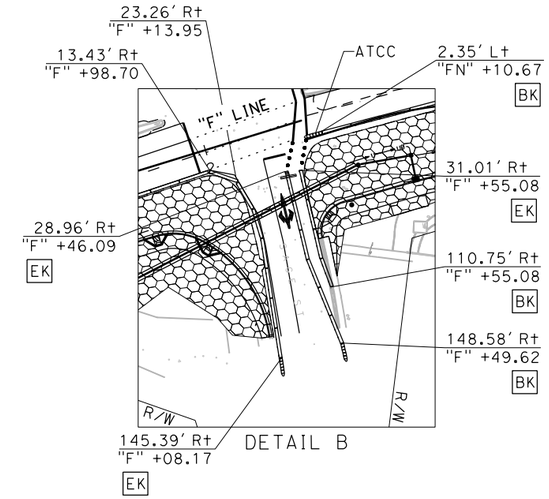

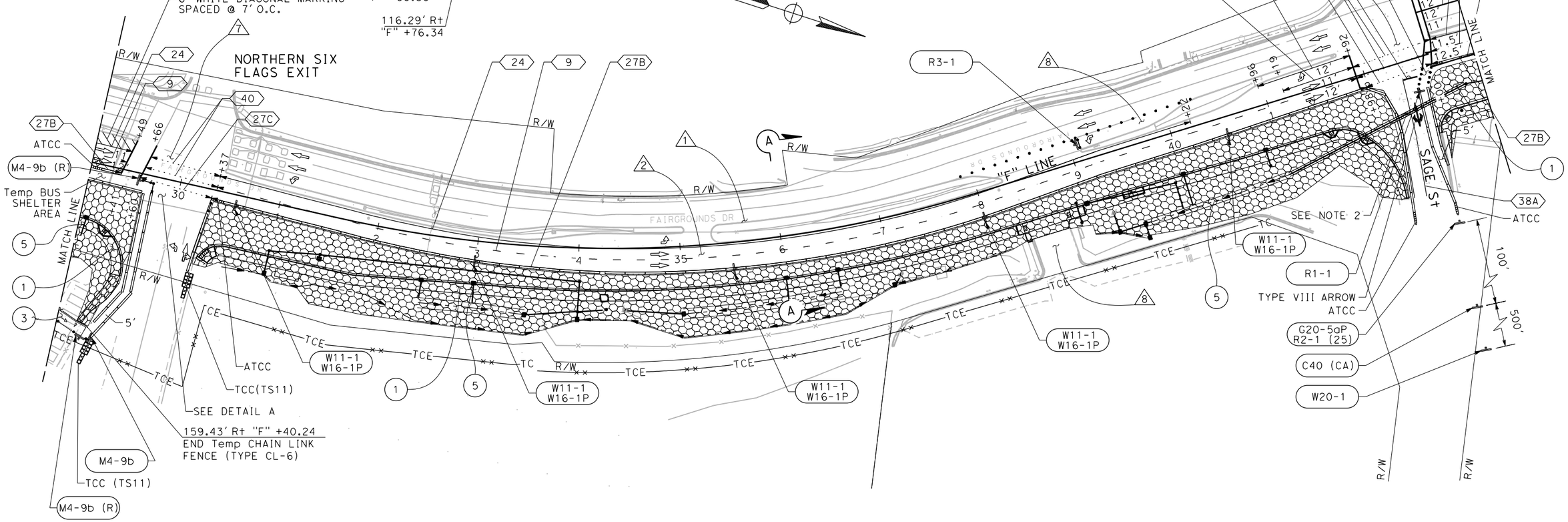

FOR NOTES, ABBREVIATIONS AND LEGEND, SEE SHEET SC-1

APPROVED FOR STAGE CONSTRUCTION WORK ONLY

STAGE CONSTRUCTION AND TRAFFIC HANDLING PLAN STAGE 1

SCALE: 1" = 50'

SC-3

CALCULATED-DESIGNED BY	RALEIGH LANGSTON	REVISED BY	R.L.
CHECKED BY	CARL GIBSON III	DATE REVISED	02/15/22

CONSULTANT FUNCTIONAL SUPERVISOR CARL GIBSON III

STATE OF CALIFORNIA - DEPARTMENT OF TRANSPORTATION

Caltrans

X:\SR 37_FAIRGROUNDS DRIVE\000_CAD\Sheets\023-Stg_Cont\MA-Plans\Stage 1\044A4414ma003.dgn

LAST REVISION 00-00-00 | DATE PLOTTED => 9/2/2022 | TIME PLOTTED => 12:51:03 PM

BORDER LAST REVISED 7/2/2010 | USERNAME => jvaldivia | DGN FILE => 044A4414ma003.dgn | RELATIVE BORDER SCALE IS IN INCHES 0 1 2 3 | UNIT 0738 | PROJECT NUMBER & PHASE 04000205841

Dist	COUNTY	ROUTE	POST MILES TOTAL PROJECT	SHEET No.	TOTAL SHEETS
04	Sol	37	10.9		

REGISTERED CIVIL ENGINEER DATE

PLANS APPROVAL DATE

REGISTERED PROFESSIONAL ENGINEER No. Exp. CIVIL STATE OF CALIFORNIA

THE STATE OF CALIFORNIA OR ITS OFFICERS OR AGENTS SHALL NOT BE RESPONSIBLE FOR THE ACCURACY OR COMPLETENESS OF SCANNED COPIES OF THIS PLAN SHEET.

WMH CORPORATION
11070 WHITE ROCK RD
SUITE 140
RANCHO CORDOVA
CA 95670

SOLANO TRANSPORTATION AUTHORITY
1 HARBOR CENTER
SUITE 130
SUISUN CITY, CA 94585

PRELIMINARY PLANS SUBJECT TO REVISION

NOTE:

FOR ACCURATE RIGHT OF WAY DATA, CONTACT RIGHT OF WAY ENGINEERING AT THE DISTRICT OFFICE.

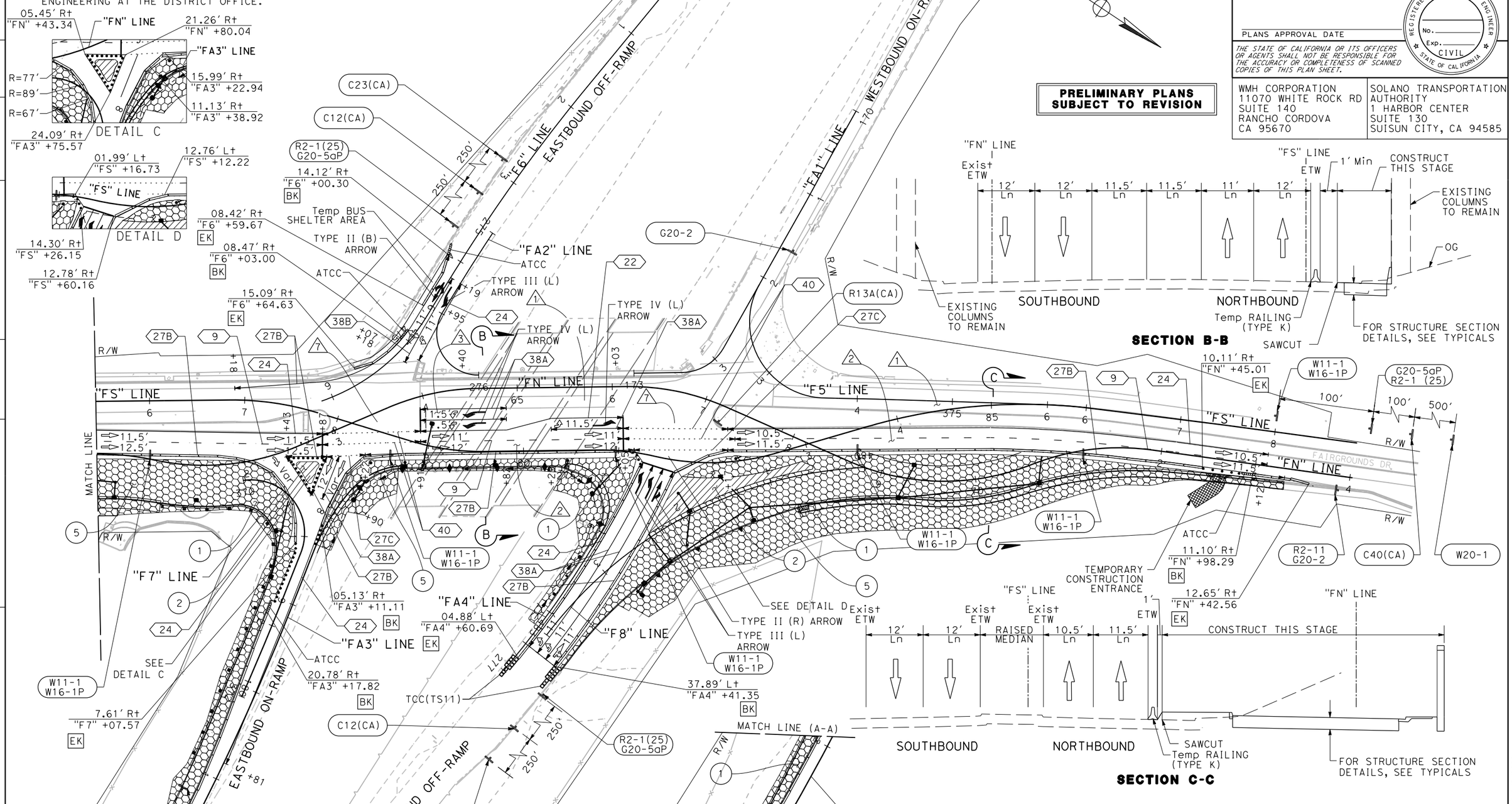

FOR NOTES, ABBREVIATIONS, AND LEGEND SEE SHEET SC-1

APPROVED FOR STAGE CONSTRUCTION WORK ONLY

STAGE CONSTRUCTION AND TRAFFIC HANDLING PLAN STAGE 1

SCALE: 1" = 50'

SC-4

R.L.	02/15/22		
REVISED BY	DATE REVISED		
RALEIGH LANGSTON	CARL GIBSON III		
CALCULATED-DESIGNED BY	CHECKED BY		
CONSULTANT FUNCTIONAL SUPERVISOR	CARL GIBSON III		

STATE OF CALIFORNIA - DEPARTMENT OF TRANSPORTATION

Caltrans

X:\SR 37_FAIRGROUNDS DRIVE\000_CAD\Sheets\023-Stg_Cont\MA-Plans\Stage 1\044A4414ma004.dgn

LAST REVISION 00-00-00 | DATE PLOTTED => 9/2/2022 | TIME PLOTTED => 12:51:12 PM

Dist	COUNTY	ROUTE	POST MILES TOTAL PROJECT	SHEET No.	TOTAL SHEETS
04	Sol	37	10.9		

REGISTERED CIVIL ENGINEER DATE

PLANS APPROVAL DATE

REGISTERED PROFESSIONAL ENGINEER No. Exp. CIVIL STATE OF CALIFORNIA

THE STATE OF CALIFORNIA OR ITS OFFICERS OR AGENTS SHALL NOT BE RESPONSIBLE FOR THE ACCURACY OR COMPLETENESS OF SCANNED COPIES OF THIS PLAN SHEET.

WMH CORPORATION
11070 WHITE ROCK RD
SUITE 140
RANCHO CORDOVA
CA 95670

SOLANO TRANSPORTATION AUTHORITY
1 HARBOR CENTER
SUITE 130
SUISUN CITY, CA 94585

PRELIMINARY PLANS SUBJECT TO REVISION

NOTE:

FOR ACCURATE RIGHT OF WAY DATA, CONTACT RIGHT OF WAY ENGINEERING AT THE DISTRICT OFFICE.

STAGE 2 CONSTRUCTION:

1. CONSTRUCT ROADWAY WIDENING
2. CONSTRUCT ROADWAY WIDENING AND SIDEWALK
3. REMOVE EXISTING SIDEWALK, CONSTRUCT CURB RAMPS
4. CONSTRUCT PROPOSED DRAINAGE.

STAGE 2 TRAFFIC:

1. MAINTAIN EXISTING TRAFFIC LANES
2. MAINTAIN 2 THROUGH LANES OF TRAFFIC
3. MAINTAIN PEDESTRIAN PATH 5' MINIMUM WIDTH
4. CONTROLLED BY EXISTING TRAFFIC SIGNAL
5. CONTROLLED BY TEMPORARY TRAFFIC SIGNAL

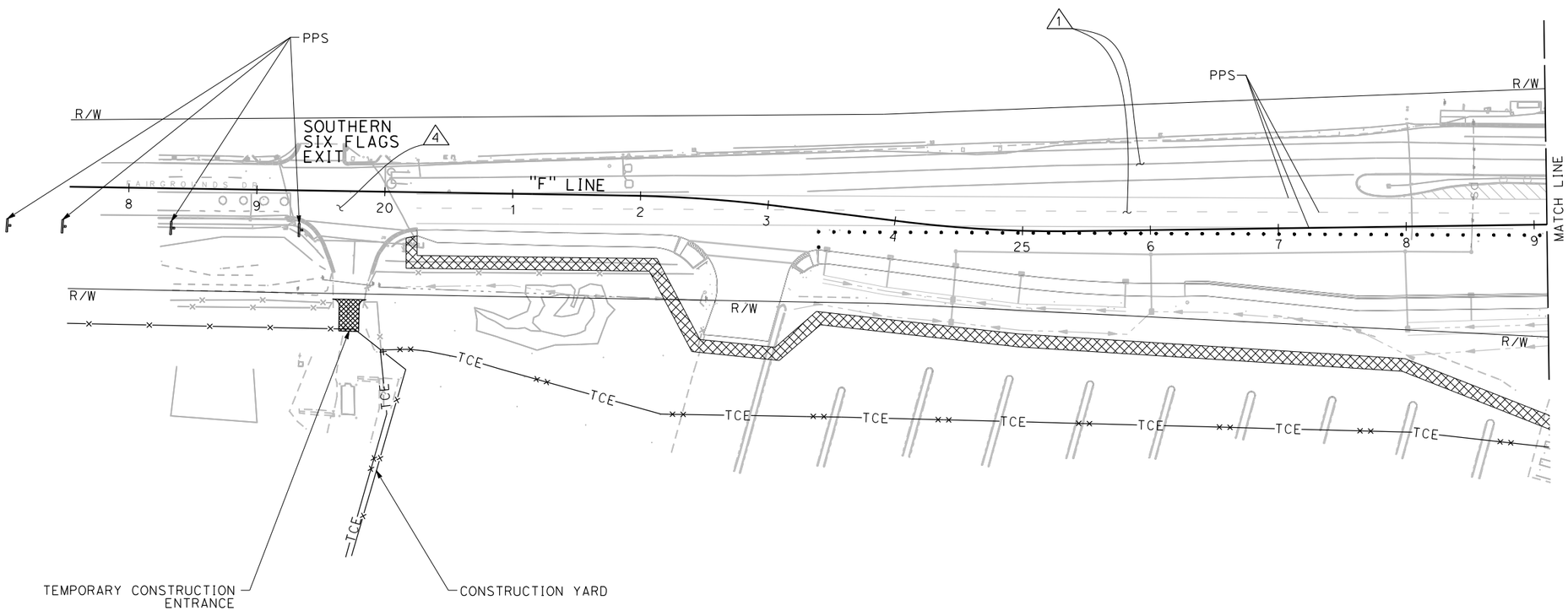

FOR NOTES, ABBREVIATIONS AND LEGEND, SEE SHEET SC-1

APPROVED FOR STAGE CONSTRUCTION WORK ONLY

STAGE CONSTRUCTION AND TRAFFIC HANDLING PLAN STAGE 2

SCALE: 1" = 50'

SC-5

REVISED BY	DATE REVISED
R.L.	02/15/22

CALCULATED-DESIGNED BY: RALEIGH LANGSTON
CHECKED BY: CARL GIBSON III
CONSULTANT FUNCTIONAL SUPERVISOR: CARL GIBSON III

STATE OF CALIFORNIA - DEPARTMENT OF TRANSPORTATION
Caltrans

X:\SR 37_FAIRGROUNDS DRIVE\000_CAD\Sheets\023-Stg_Cont\MA-Plans\Stage 2\044A4414ma005.dgn

LAST REVISION 00-00-00 | DATE PLOTTED => 9/2/2022 | TIME PLOTTED => 12:51:36 PM

Dist	COUNTY	ROUTE	POST MILES TOTAL PROJECT	SHEET No.	TOTAL SHEETS
04	Sol	37	10.9		

REGISTERED CIVIL ENGINEER DATE

PLANS APPROVAL DATE

REGISTERED PROFESSIONAL ENGINEER No. Exp. CIVIL STATE OF CALIFORNIA

THE STATE OF CALIFORNIA OR ITS OFFICERS OR AGENTS SHALL NOT BE RESPONSIBLE FOR THE ACCURACY OR COMPLETENESS OF SCANNED COPIES OF THIS PLAN SHEET.

WMH CORPORATION
11070 WHITE ROCK RD
SUITE 140
RANCHO CORDOVA
CA 95670

SOLANO TRANSPORTATION AUTHORITY
1 HARBOR CENTER
SUITE 130
SUISUN CITY, CA 94585

PRELIMINARY PLANS SUBJECT TO REVISION

NOTE:

FOR ACCURATE RIGHT OF WAY DATA, CONTACT RIGHT OF WAY ENGINEERING AT THE DISTRICT OFFICE.

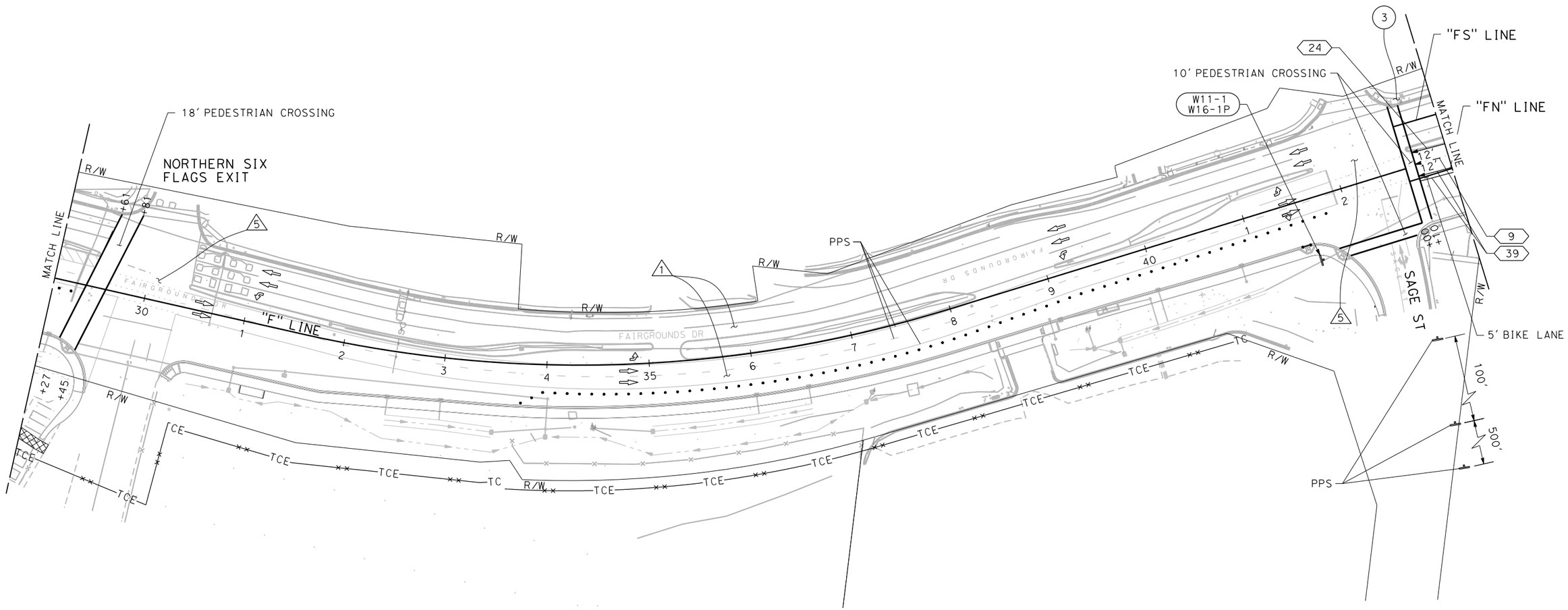

FOR NOTES, ABBREVIATIONS AND LEGEND, SEE SHEET SC-1

APPROVED FOR STAGE CONSTRUCTION WORK ONLY

STAGE CONSTRUCTION AND TRAFFIC HANDLING PLAN STAGE 2

SCALE: 1" = 50'

SC-6

REVISED BY	DATE REVISED
R.L.	02/15/22

CALCULATED-DESIGNED BY: RALEIGH LANGSTON
CHECKED BY: CARL GIBSON III
CONSULTANT FUNCTIONAL SUPERVISOR: CARL GIBSON III

STATE OF CALIFORNIA - DEPARTMENT OF TRANSPORTATION

X:\SR 37_FAIRGROUNDS DRIVE\000_CAD\Sheets\023-Stg_Cont\MA-Plans\Stage 2\044A4414ma006.dgn

LAST REVISION 00-00-00 | DATE PLOTTED => 9/2/2022 | TIME PLOTTED => 12:51:41 PM

Dist	COUNTY	ROUTE	POST MILES TOTAL PROJECT	SHEET No.	TOTAL SHEETS
04	Sol	37	10.9		

REGISTERED CIVIL ENGINEER DATE

PLANS APPROVAL DATE

REGISTERED PROFESSIONAL ENGINEER No. Exp. CIVIL STATE OF CALIFORNIA

THE STATE OF CALIFORNIA OR ITS OFFICERS OR AGENTS SHALL NOT BE RESPONSIBLE FOR THE ACCURACY OR COMPLETENESS OF SCANNED COPIES OF THIS PLAN SHEET.

WMH CORPORATION
11070 WHITE ROCK RD
SUITE 140
RANCHO CORDOVA
CA 95670

SOLANO TRANSPORTATION AUTHORITY
1 HARBOR CENTER
SUITE 130
SUISUN CITY, CA 94585

PRELIMINARY PLANS SUBJECT TO REVISION

NOTE:

FOR ACCURATE RIGHT OF WAY DATA, CONTACT RIGHT OF WAY ENGINEERING AT THE DISTRICT OFFICE.

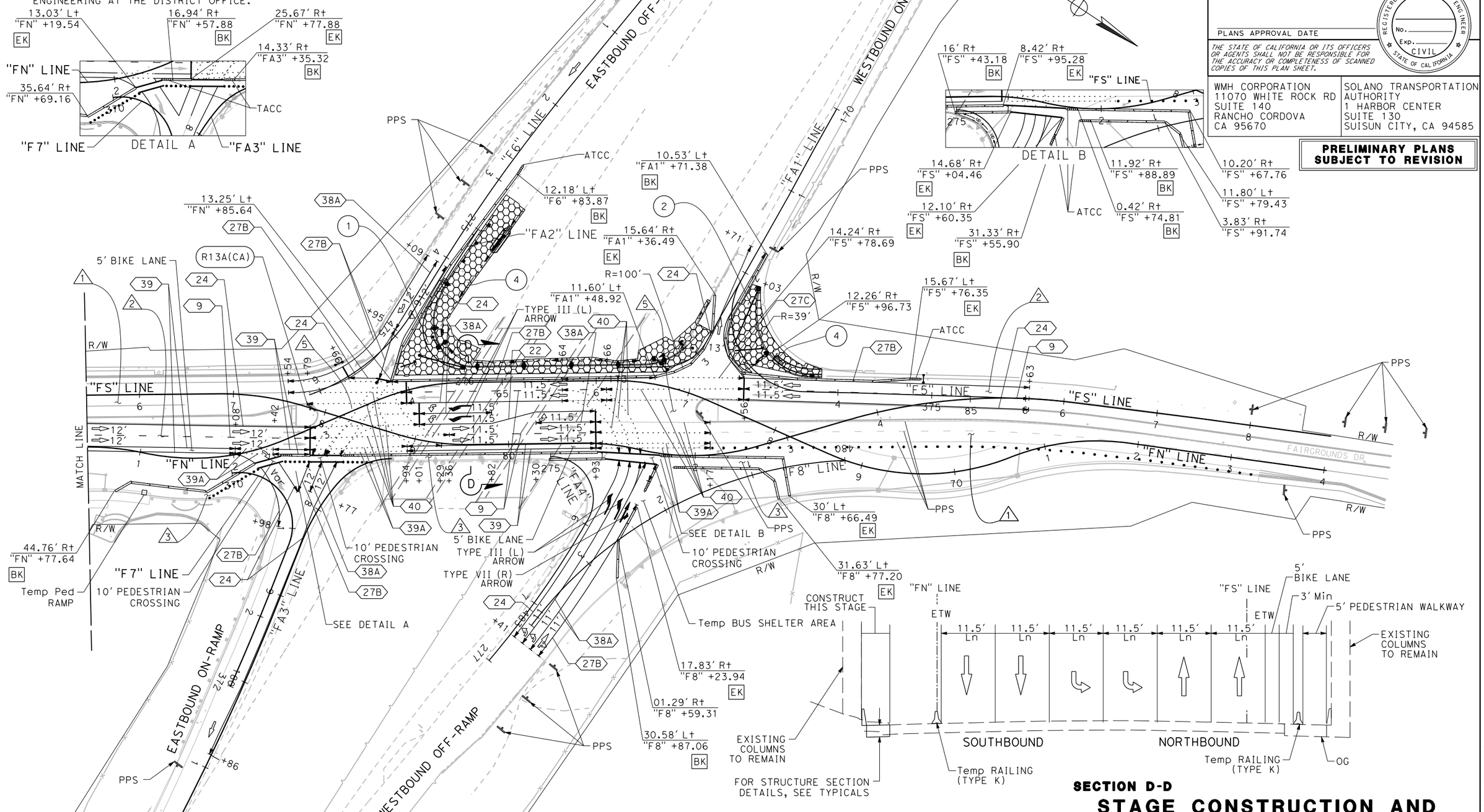

APPROVED FOR STAGE CONSTRUCTION WORK ONLY

SECTION D-D

STAGE CONSTRUCTION AND TRAFFIC HANDLING PLAN STAGE 2

SCALE: 1" = 50'

SC-7

R.L.	02/15/22	REVISED BY	DATE REVISED
RALEIGH LANGSTON	CARL GIBSON III	CALCULATED-DESIGNED BY	CHECKED BY
CONSULTANT FUNCTIONAL SUPERVISOR	CARL GIBSON III		

STATE OF CALIFORNIA - DEPARTMENT OF TRANSPORTATION

Caltrans

X:\SR 37_FAIRGROUNDS DRIVE\000_CAD\Sheets\023-Stg_Cont\MA-Plans\Stage 2\044A4414ma007.dgn

LAST REVISION 00-00-00 | DATE PLOTTED => 9/2/2022 | TIME PLOTTED => 12:51:46 PM

BORDER LAST REVISED 7/2/2010 | USERNAME => jvaldivia | DGN FILE => 044A4414ma007.dgn | RELATIVE BORDER SCALE IS IN INCHES 0 1 2 3 | UNIT 0738 | PROJECT NUMBER & PHASE 04000205841

Dist	COUNTY	ROUTE	POST MILES TOTAL PROJECT	SHEET No.	TOTAL SHEETS
04	Sol	37	10.9		

REGISTERED CIVIL ENGINEER DATE

PLANS APPROVAL DATE

REGISTERED PROFESSIONAL ENGINEER No. Exp. CIVIL STATE OF CALIFORNIA

THE STATE OF CALIFORNIA OR ITS OFFICERS OR AGENTS SHALL NOT BE RESPONSIBLE FOR THE ACCURACY OR COMPLETENESS OF SCANNED COPIES OF THIS PLAN SHEET.

WMH CORPORATION
11070 WHITE ROCK RD
SUITE 140
RANCHO CORDOVA
CA 95670

SOLANO TRANSPORTATION AUTHORITY
1 HARBOR CENTER
SUITE 130
SUISUN CITY, CA 94585

PRELIMINARY PLANS SUBJECT TO REVISION

NOTES:

1. FOR ACCURATE RIGHT OF WAY DATA, CONTACT RIGHT OF WAY ENGINEERING AT THE DISTRICT OFFICE.
2. FOR LANE CLOSURE DETAILS, SEE TEMPORARY TRAFFIC CONTROL STANDARD PLAN T12.

STAGE 3A CONSTRUCTION:

(1) CONSTRUCT PAVEMENT OVERLAY AT NIGHT

STAGE 3A TRAFFIC:

1. SHIFT NB TRAFFIC TO EXISTING SB SIDE
2. MAINTAIN 1 THROUGH LANE OF TRAFFIC EACH DIRECTION
3. TRANSITION TO EXISTING TRAFFIC DIRECTIONS, MAINTAIN EXISTING SB LEFT TURNING LANE
4. MAINTAIN 2 THROUGH LANES OF TRAFFIC
5. CLOSE DRIVEWAY FOR NIGHT WORK. USE DRIVEWAY ON SAGE ST INSTEAD.
6. CONTROLLED BY EXISTING TRAFFIC SIGNAL
7. CONTROLLED BY FLAGGERS
8. CONTROLLED BY TEMPORARY TRAFFIC SIGNAL
9. MAINTAIN PROTECTED PEDESTRIAN ROUTE, 5' MINIMUM WIDTH

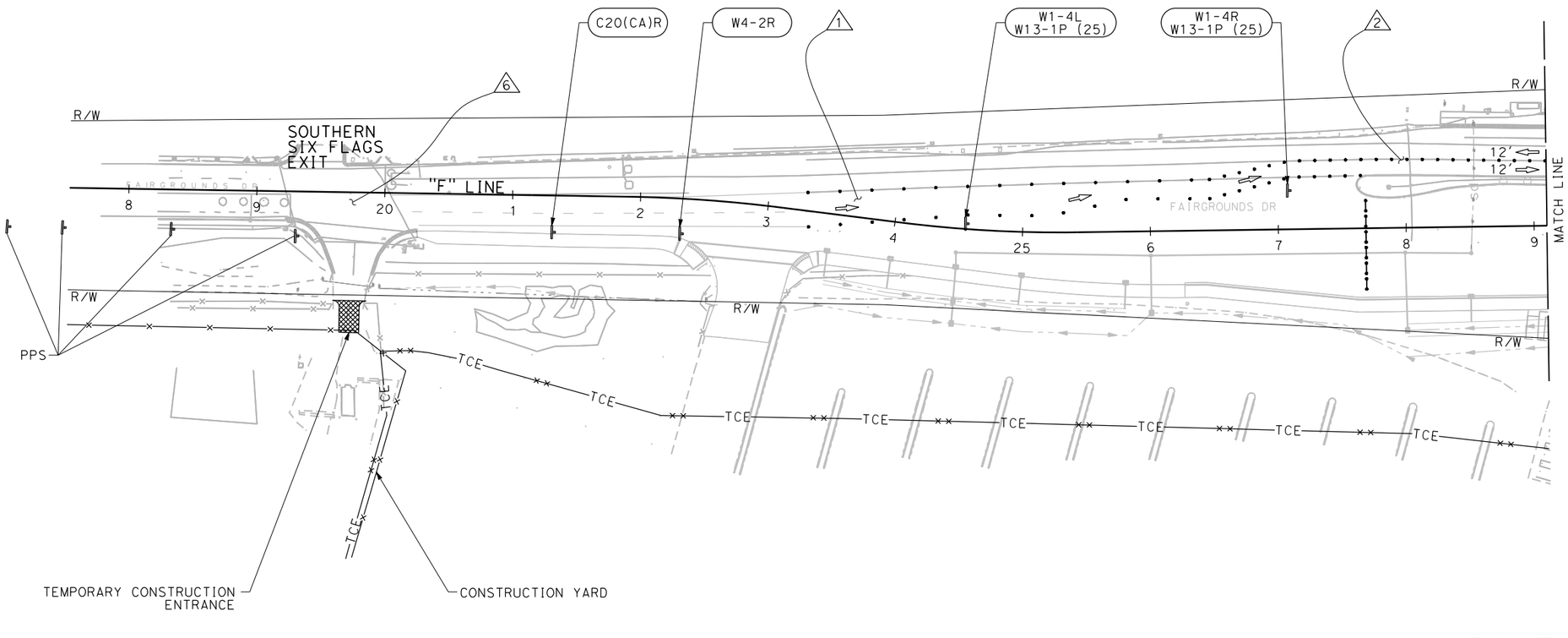

FOR NOTES, ABBREVIATIONS AND LEGEND, SEE SHEET SC-1

APPROVED FOR STAGE CONSTRUCTION WORK ONLY

STAGE CONSTRUCTION AND TRAFFIC HANDLING PLAN STAGE 3A

SCALE: 1" = 50'

SC-8

REVISED BY	DATE REVISED
R.L.	02/15/22

RALEIGH LANGSTON — CALCULATED-DESIGNED BY
CARL GIBSON III — CHECKED BY
CARL GIBSON III — CONSULTANT FUNCTIONAL SUPERVISOR

STATE OF CALIFORNIA - DEPARTMENT OF TRANSPORTATION

X:\SR 37_FAIRGROUNDS DRIVE\000_CAD\Sheets\023-Stg_Cont\MA-Plans\Stage 3\044A4414ma008.dgn

LAST REVISION 00-00-00 | DATE PLOTTED => 9/2/2022 | TIME PLOTTED => 12:52:08 PM

Dist	COUNTY	ROUTE	POST MILES TOTAL PROJECT	SHEET No.	TOTAL SHEETS
04	Sol	37	10.9		

REGISTERED CIVIL ENGINEER DATE

PLANS APPROVAL DATE

REGISTERED PROFESSIONAL ENGINEER No. Exp. CIVIL STATE OF CALIFORNIA

THE STATE OF CALIFORNIA OR ITS OFFICERS OR AGENTS SHALL NOT BE RESPONSIBLE FOR THE ACCURACY OR COMPLETENESS OF SCANNED COPIES OF THIS PLAN SHEET.

WMH CORPORATION
11070 WHITE ROCK RD
SUITE 140
RANCHO CORDOVA
CA 95670

SOLANO TRANSPORTATION AUTHORITY
1 HARBOR CENTER
SUITE 130
SUISUN CITY, CA 94585

PRELIMINARY PLANS SUBJECT TO REVISION

NOTES:

1. FOR ACCURATE RIGHT OF WAY DATA, CONTACT RIGHT OF WAY ENGINEERING AT THE DISTRICT OFFICE.
2. FOR LANE CLOSURE DETAILS, SEE TEMPORARY TRAFFIC CONTROL STANDARD PLAN T12.

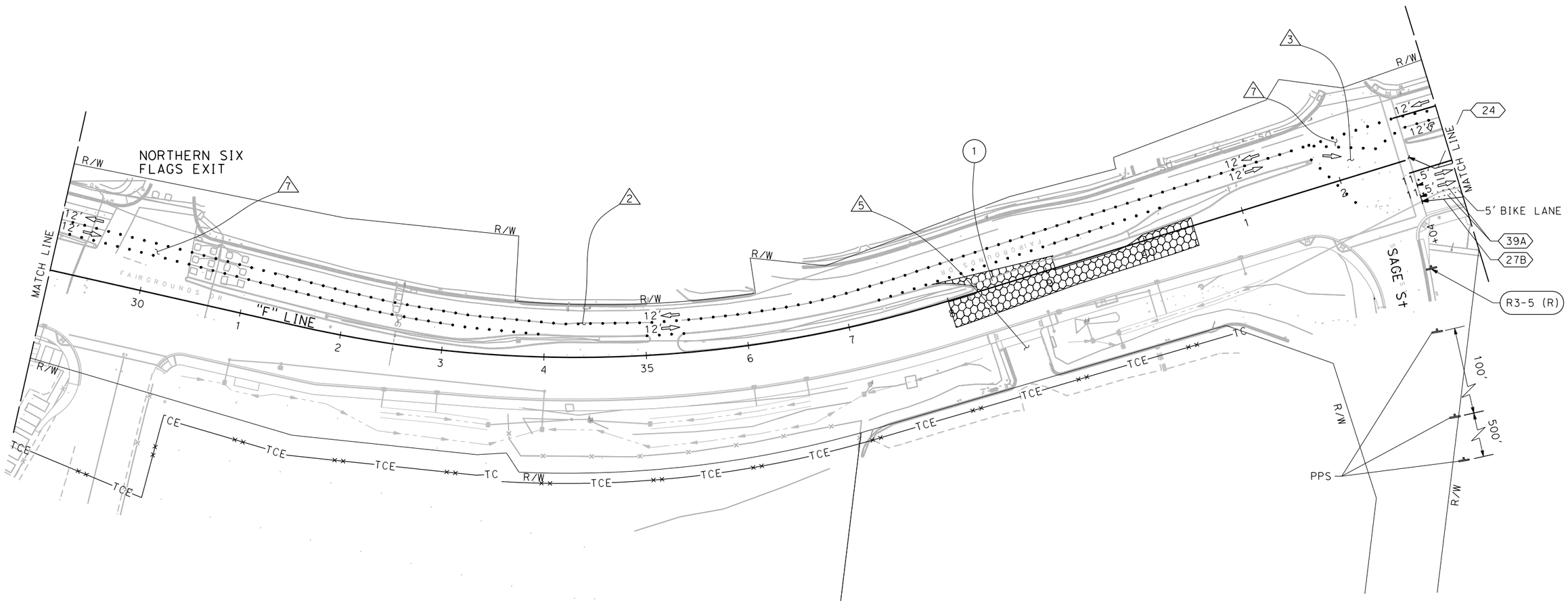

FOR NOTES, ABBREVIATIONS AND LEGEND, SEE SHEET SC-1

APPROVED FOR STAGE CONSTRUCTION WORK ONLY

STAGE CONSTRUCTION AND TRAFFIC HANDLING PLAN STAGE 3A

SCALE: 1" = 50'

SC-9

REVISED BY	DATE REVISED
R.L.	02/15/22

RALEIGH LANGSTON — CALCULATED-DESIGNED BY
CARL GIBSON III — CHECKED BY
CARL GIBSON III — CONSULTANT FUNCTIONAL SUPERVISOR

STATE OF CALIFORNIA - DEPARTMENT OF TRANSPORTATION

X:\SR 37_FAIRGROUNDS DRIVE\000_CAD\Sheets\023-Stg_Cont\MA-Plans\Stage 3\044A4414ma009.dgn

LAST REVISION 00-00-00 | DATE PLOTTED => 9/2/2022 | TIME PLOTTED => 12:52:14 PM

BORDER LAST REVISED 7/2/2010 | USERNAME => jvaldivia | DGN FILE => 044A4414ma009.dgn | RELATIVE BORDER SCALE IS IN INCHES 0 1 2 3 | UNIT 0738 | PROJECT NUMBER & PHASE 04000205841

Dist	COUNTY	ROUTE	POST MILES TOTAL PROJECT	SHEET No.	TOTAL SHEETS
04	Sol	37	10.9		

REGISTERED CIVIL ENGINEER DATE

PLANS APPROVAL DATE

REGISTERED PROFESSIONAL ENGINEER No. Exp. CIVIL STATE OF CALIFORNIA

THE STATE OF CALIFORNIA OR ITS OFFICERS OR AGENTS SHALL NOT BE RESPONSIBLE FOR THE ACCURACY OR COMPLETENESS OF SCANNED COPIES OF THIS PLAN SHEET.

WMH CORPORATION
11070 WHITE ROCK RD
SUITE 140
RANCHO CORDOVA
CA 95670

SOLANO TRANSPORTATION AUTHORITY
1 HARBOR CENTER
SUITE 130
SUISUN CITY, CA 94585

PRELIMINARY PLANS SUBJECT TO REVISION

NOTES:

1. FOR ACCURATE RIGHT OF WAY DATA, CONTACT RIGHT OF WAY ENGINEERING AT THE DISTRICT OFFICE.
2. FOR LANE CLOSURE DETAILS, SEE TEMPORARY TRAFFIC CONTROL STANDARD PLAN T12.

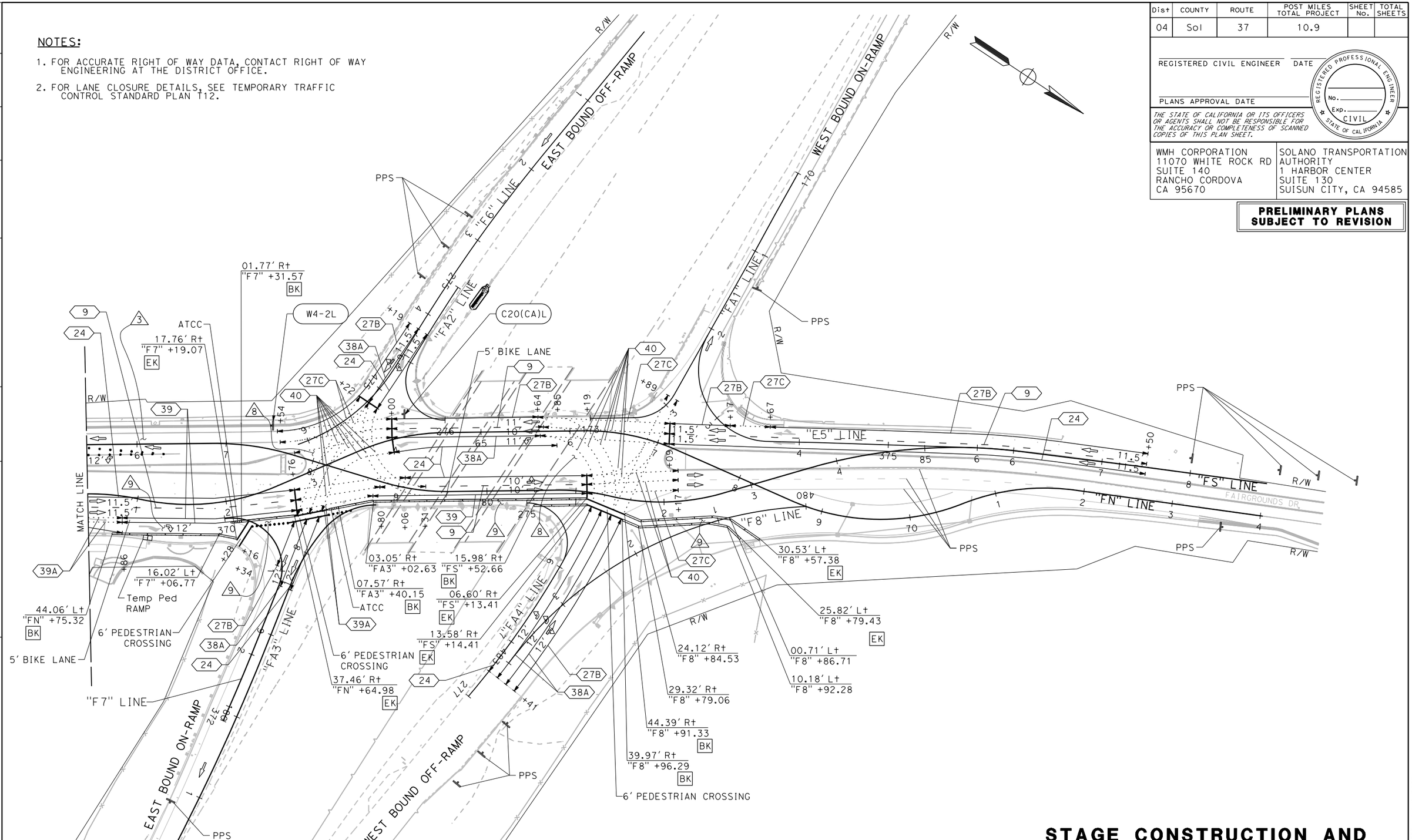

FOR NOTES, ABBREVIATIONS AND LEGEND, SEE SHEET SC-1

APPROVED FOR STAGE CONSTRUCTION WORK ONLY

STAGE CONSTRUCTION AND TRAFFIC HANDLING PLAN STAGE 3A

SCALE: 1" = 50'

SC-10

REVISED BY	DATE REVISED
R.L.	02/15/22

RALEIGH LANGSTON — CARL GIBSON III — CALCULATED-DESIGNED BY — CHECKED BY — CARL GIBSON III — CONSULTANT FUNCTIONAL SUPERVISOR

STATE OF CALIFORNIA - DEPARTMENT OF TRANSPORTATION

X:\SR 37_FAIRGROUNDS DRIVE\000_CAD\Sheets\023-Stg_Cont\MA-Plans\Stage 3\044A4414ma010.dgn

LAST REVISION 00-00-00 | DATE PLOTTED => 9/2/2022 | TIME PLOTTED => 12:52:22 PM

BORDER LAST REVISED 7/2/2010 | USERNAME => jvaldivia | DGN FILE => 044A4414ma010.dgn | RELATIVE BORDER SCALE IS IN INCHES 0 1 2 3 | UNIT 0738 | PROJECT NUMBER & PHASE 04000205841

Dist	COUNTY	ROUTE	POST MILES TOTAL PROJECT	SHEET No.	TOTAL SHEETS
04	Sol	37	10.9		

REGISTERED CIVIL ENGINEER DATE

PLANS APPROVAL DATE

REGISTERED PROFESSIONAL ENGINEER No. Exp. CIVIL STATE OF CALIFORNIA

THE STATE OF CALIFORNIA OR ITS OFFICERS OR AGENTS SHALL NOT BE RESPONSIBLE FOR THE ACCURACY OR COMPLETENESS OF SCANNED COPIES OF THIS PLAN SHEET.

WMH CORPORATION
11070 WHITE ROCK RD
SUITE 140
RANCHO CORDOVA
CA 95670

SOLANO TRANSPORTATION AUTHORITY
1 HARBOR CENTER
SUITE 130
SUISUN CITY, CA 94585

PRELIMINARY PLANS SUBJECT TO REVISION

NOTES:

1. FOR ACCURATE RIGHT OF WAY DATA, CONTACT RIGHT OF WAY ENGINEERING AT THE DISTRICT OFFICE.
2. FOR LANE CLOSURE DETAILS, SEE TEMPORARY TRAFFIC CONTROL STANDARD PLAN T12.

STAGE 3B CONSTRUCTION:

(1) CONSTRUCT FULL DEPTH PAVEMENT REPLACEMENT

STAGE 3B TRAFFIC:

(1) SHIFT NB TRAFFIC TO EXISTING SB SIDE

(2) MAINTAIN 1 THROUGH LANE OF TRAFFIC EACH DIRECTION

(3) TRANSITION TO EXISTING TRAFFIC LANES, MAINTAIN EXISTING SB LEFT TURNING LANE

(4) CONTROLLED BY EXISTING TRAFFIC SIGNAL

(5) CONTROLLED BY FLAGGERS

(6) CONTROLLED BY TEMPORARY TRAFFIC SIGNAL

(7) MAINTAIN PROTECTED PEDESTRIAN ROUTE, 5' MINIMUM WIDTH

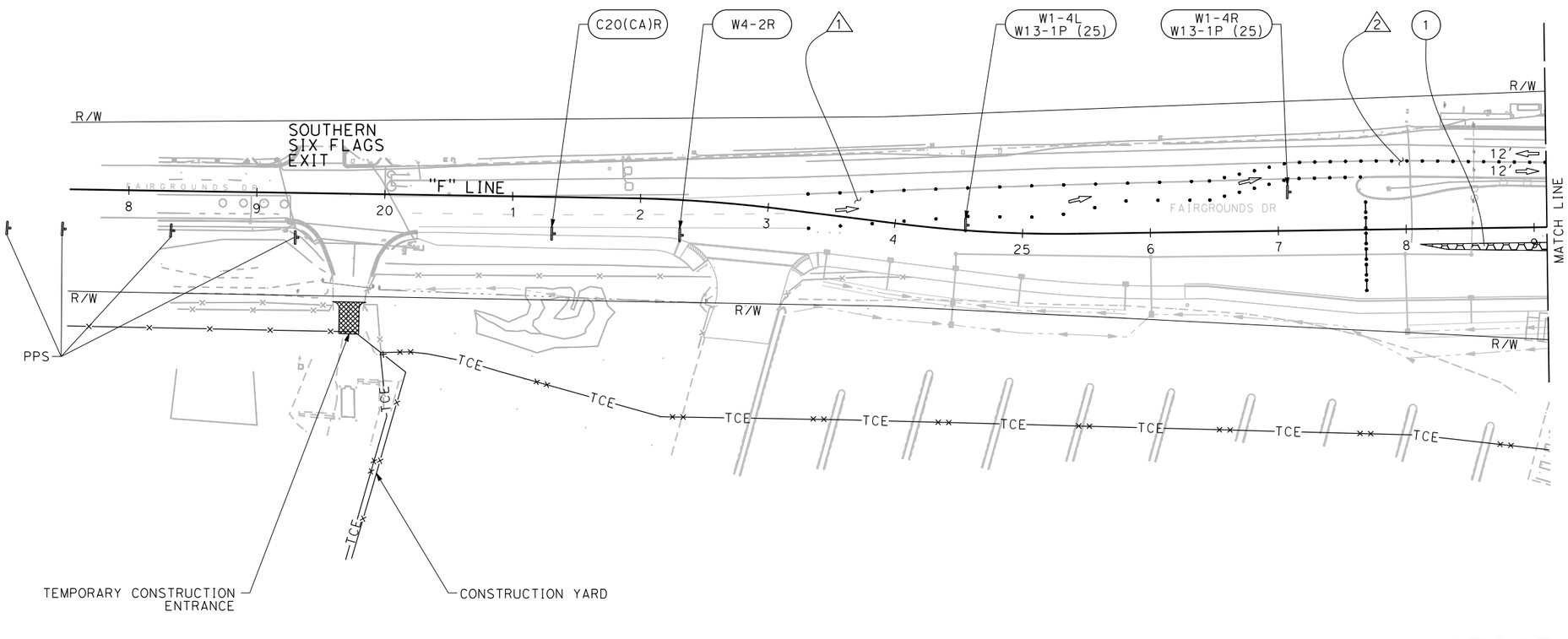

FOR NOTES, ABBREVIATIONS AND LEGEND, SEE SHEET SC-1

APPROVED FOR STAGE CONSTRUCTION WORK ONLY

STAGE CONSTRUCTION AND TRAFFIC HANDLING PLAN STAGE 3B

SCALE: 1" = 50'

SC-11

REVISED BY	DATE REVISED
R.L.	02/15/22

CALCULATED-DESIGNED BY: RALEIGH LANGSTON
CHECKED BY: CARL GIBSON III
CONSULTANT FUNCTIONAL SUPERVISOR: CARL GIBSON III
STATE OF CALIFORNIA - DEPARTMENT OF TRANSPORTATION

X:\SR 37_FAIRGROUNDS DRIVE\000_CAD\Sheets\023-Stg_Cont\MA-Plans\Stage 3\044A4414ma011.dgn

LAST REVISION 00-00-00 | DATE PLOTTED => 9/2/2022 | TIME PLOTTED => 12:53:05 PM

Dist	COUNTY	ROUTE	POST MILES TOTAL PROJECT	SHEET No.	TOTAL SHEETS
04	Sol	37	10.9		

REGISTERED CIVIL ENGINEER DATE

PLANS APPROVAL DATE

REGISTERED PROFESSIONAL ENGINEER No. Exp. CIVIL STATE OF CALIFORNIA

THE STATE OF CALIFORNIA OR ITS OFFICERS OR AGENTS SHALL NOT BE RESPONSIBLE FOR THE ACCURACY OR COMPLETENESS OF SCANNED COPIES OF THIS PLAN SHEET.

WMH CORPORATION
11070 WHITE ROCK RD
SUITE 140
RANCHO CORDOVA
CA 95670

SOLANO TRANSPORTATION AUTHORITY
1 HARBOR CENTER
SUITE 130
SUISUN CITY, CA 94585

PRELIMINARY PLANS SUBJECT TO REVISION

NOTES:

1. FOR ACCURATE RIGHT OF WAY DATA, CONTACT RIGHT OF WAY ENGINEERING AT THE DISTRICT OFFICE.
2. FOR LANE CLOSURE DETAILS, SEE TEMPORARY TRAFFIC CONTROL STANDARD PLAN T12.

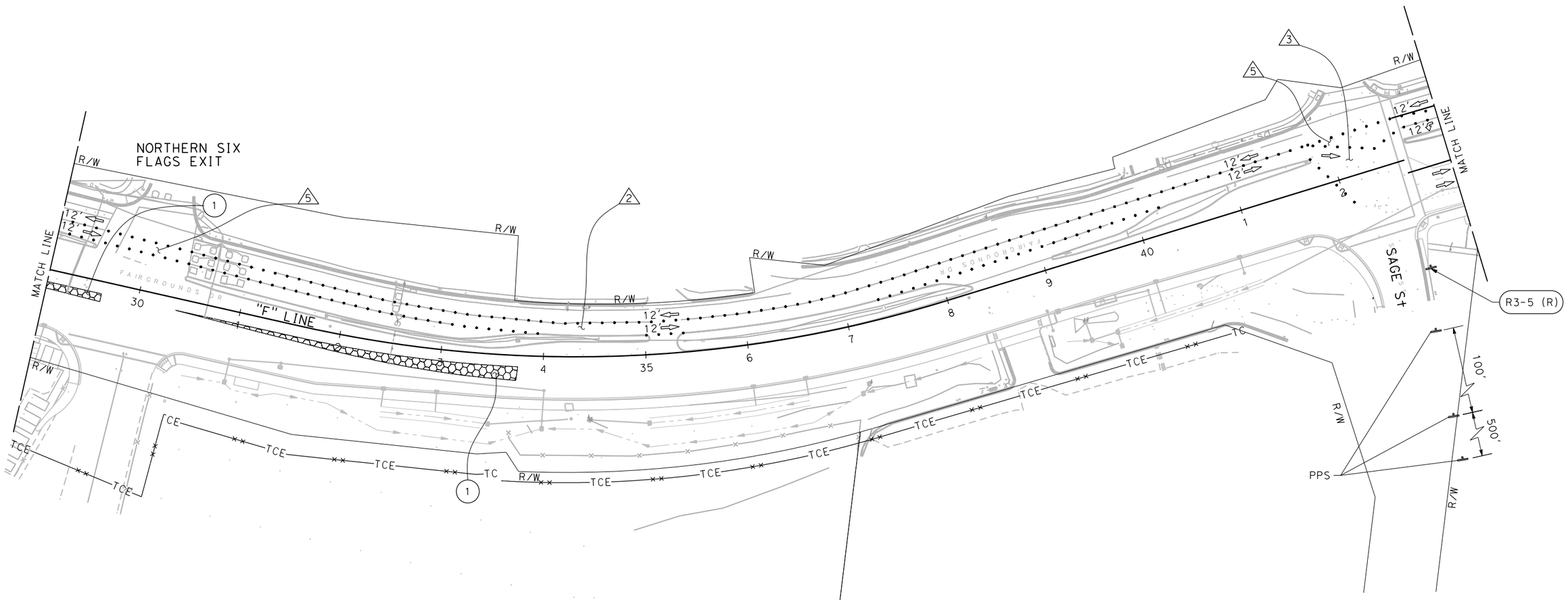

FOR NOTES, ABBREVIATIONS AND LEGEND, SEE SHEET SC-1

APPROVED FOR STAGE CONSTRUCTION WORK ONLY

STAGE CONSTRUCTION AND TRAFFIC HANDLING PLAN STAGE 3B

SCALE: 1" = 50'

SC-12

REVISED BY	DATE REVISED
R.L.	02/15/22

RALEIGH LANGSTON — CALCULATED-DESIGNED BY
CARL GIBSON III — CHECKED BY
CARL GIBSON III — CONSULTANT FUNCTIONAL SUPERVISOR

STATE OF CALIFORNIA - DEPARTMENT OF TRANSPORTATION

X:\SR 37_FAIRGROUNDS DRIVE\000_CAD\Sheets\023-Stg_Cont\MA-Plans\Stage 3\044A4414ma012.dgn

LAST REVISION 00-00-00 | DATE PLOTTED => 9/2/2022 | TIME PLOTTED => 12:53:12 PM

BORDER LAST REVISED 7/2/2010 | USERNAME => jvaldivia | DGN FILE => 044A4414ma012.dgn | RELATIVE BORDER SCALE IS IN INCHES 0 1 2 3 | UNIT 0738 | PROJECT NUMBER & PHASE 04000205841

Dist	COUNTY	ROUTE	POST MILES TOTAL PROJECT	SHEET No.	TOTAL SHEETS
04	Sol	37	10.9		

REGISTERED CIVIL ENGINEER DATE

PLANS APPROVAL DATE

REGISTERED PROFESSIONAL ENGINEER No. Exp. CIVIL STATE OF CALIFORNIA

THE STATE OF CALIFORNIA OR ITS OFFICERS OR AGENTS SHALL NOT BE RESPONSIBLE FOR THE ACCURACY OR COMPLETENESS OF SCANNED COPIES OF THIS PLAN SHEET.

WMH CORPORATION
11070 WHITE ROCK RD
SUITE 140
RANCHO CORDOVA
CA 95670

SOLANO TRANSPORTATION AUTHORITY
1 HARBOR CENTER
SUITE 130
SUISUN CITY, CA 94585

PRELIMINARY PLANS SUBJECT TO REVISION

NOTES:

1. FOR ACCURATE RIGHT OF WAY DATA, CONTACT RIGHT OF WAY ENGINEERING AT THE DISTRICT OFFICE.
2. FOR LANE CLOSURE DETAILS, SEE TEMPORARY TRAFFIC CONTROL STANDARD PLAN T12.

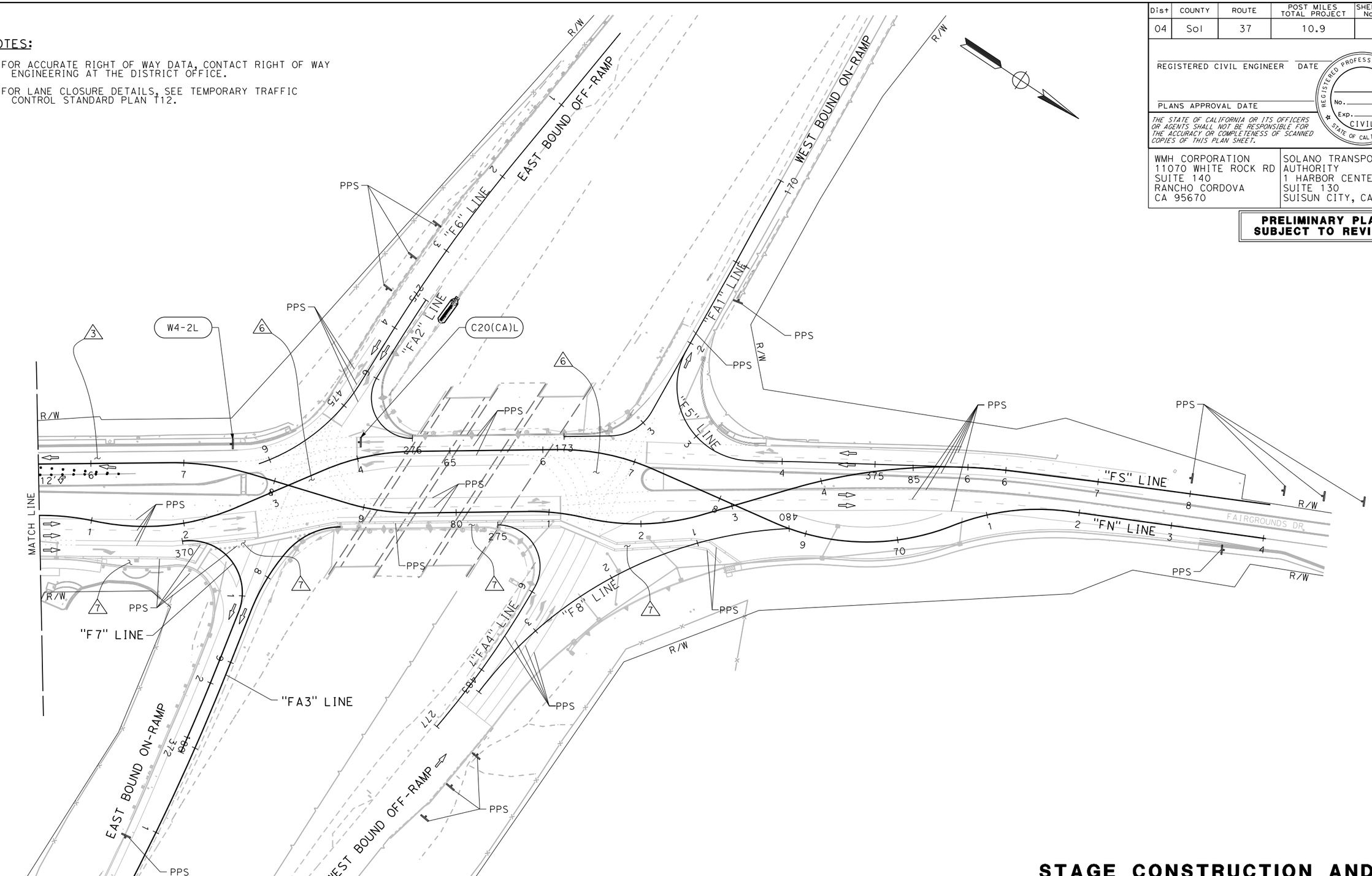

FOR NOTES, ABBREVIATIONS AND LEGEND, SEE SHEET SC-1

APPROVED FOR STAGE CONSTRUCTION WORK ONLY

STAGE CONSTRUCTION AND TRAFFIC HANDLING PLAN STAGE 3B

SCALE: 1" = 50'

SC-13

CALCULATED-DESIGNED BY	RALEIGH LANGSTON
CHECKED BY	CARL GIBSON III
REVISED BY	R.L.
DATE REVISED	02/15/22
CONSULTANT FUNCTIONAL SUPERVISOR	CARL GIBSON III

STATE OF CALIFORNIA - DEPARTMENT OF TRANSPORTATION

Caltrans

X:\SR 37_FAIRGROUNDS DRIVE\000_CAD\Sheets\023-Stg_Cont\MA-Plans\Stage 3\044A4414ma013.dgn

LAST REVISION 00-00-00 | DATE PLOTTED => 9/2/2022 | TIME PLOTTED => 12:53:16 PM

Dist	COUNTY	ROUTE	POST MILES TOTAL PROJECT	SHEET No.	TOTAL SHEETS
04	Sol	37	10.9		

REGISTERED CIVIL ENGINEER DATE

PLANS APPROVAL DATE

REGISTERED PROFESSIONAL ENGINEER No. Exp. CIVIL STATE OF CALIFORNIA

THE STATE OF CALIFORNIA OR ITS OFFICERS OR AGENTS SHALL NOT BE RESPONSIBLE FOR THE ACCURACY OR COMPLETENESS OF SCANNED COPIES OF THIS PLAN SHEET.

WMH CORPORATION
11070 WHITE ROCK RD
SUITE 140
RANCHO CORDOVA
CA 95670

SOLANO TRANSPORTATION AUTHORITY
1 HARBOR CENTER
SUITE 130
SUISUN CITY, CA 94585

PRELIMINARY PLANS SUBJECT TO REVISION

NOTES:

1. FOR ACCURATE RIGHT OF WAY DATA, CONTACT RIGHT OF WAY ENGINEERING AT THE DISTRICT OFFICE.
2. FOR LANE CLOSURE DETAILS, SEE TEMPORARY TRAFFIC CONTROL STANDARD PLAN T12.

STAGE 3C CONSTRUCTION:

(1) CONSTRUCT FULL DEPTH PAVEMENT REPLACEMENT

(2) CONSTRUCT PROPOSED DRAINAGE.

STAGE 3C TRAFFIC:

△1 MAINTAIN 2 THROUGH LANES OF TRAFFIC

△2 SHIFT NB TRAFFIC TO EXISTING SB SIDE

△3 MAINTAIN 1 THROUGH LANE OF TRAFFIC EACH DIRECTION

△4 TRANSITION TO EXISTING TRAFFIC DIRECTIONS, MAINTAIN EXISTING SB LEFT TURNING LANE

△5 MAINTAIN PROTECTED PEDESTRIAN ROUTE, 5′ MINIMUM WIDTH

△6 CONTROLLED BY EXISTING TRAFFIC SIGNAL

△7 CONTROLLED BY TEMPORARY TRAFFIC SIGNAL

△8 CONTROLLED BY FLAGGERS

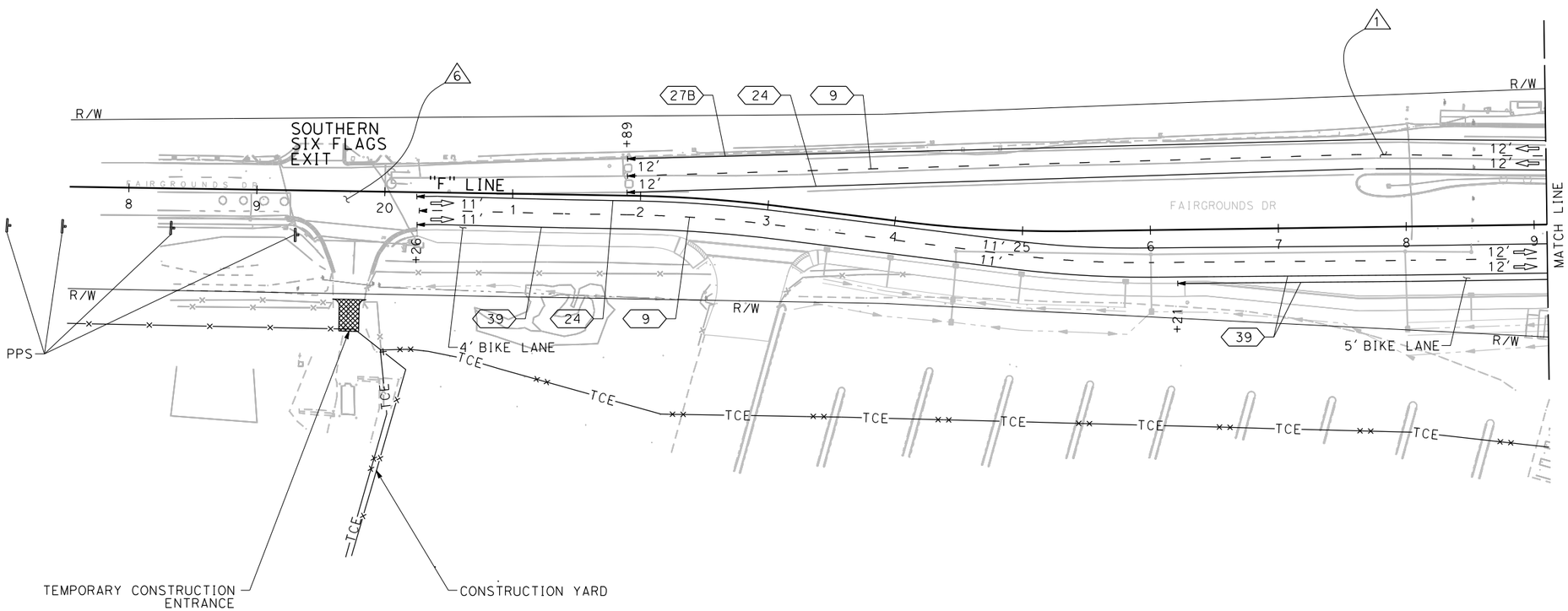

FOR NOTES, ABBREVIATIONS AND LEGEND, SEE SHEET SC-1

APPROVED FOR STAGE CONSTRUCTION WORK ONLY

STAGE CONSTRUCTION AND TRAFFIC HANDLING PLAN STAGE 3C

SCALE: 1" = 50′

SC-14

CALCULATED-DESIGNED BY	RALEIGH LANGSTON
CHECKED BY	CARL GIBSON III
REVISED BY	R.L.
DATE REVISED	02/15/22

CONSULTANT FUNCTIONAL SUPERVISOR: CARL GIBSON III

STATE OF CALIFORNIA - DEPARTMENT OF TRANSPORTATION

Caltrans

X:\SR 37_FAIRGROUNDS DRIVE\000_CAD\Sheets\023-Stg_Cont\MA-Plans\Stage 3\044A4414ma014.dgn

LAST REVISION 00-00-00 | DATE PLOTTED => 9/2/2022 | TIME PLOTTED => 12:53:37 PM

Dist	COUNTY	ROUTE	POST MILES TOTAL PROJECT	SHEET No.	TOTAL SHEETS
04	Sol	37	10.9		

REGISTERED CIVIL ENGINEER DATE

PLANS APPROVAL DATE

REGISTERED PROFESSIONAL ENGINEER No. Exp. CIVIL STATE OF CALIFORNIA

THE STATE OF CALIFORNIA OR ITS OFFICERS OR AGENTS SHALL NOT BE RESPONSIBLE FOR THE ACCURACY OR COMPLETENESS OF SCANNED COPIES OF THIS PLAN SHEET.

WMH CORPORATION
11070 WHITE ROCK RD
SUITE 140
RANCHO CORDOVA
CA 95670

SOLANO TRANSPORTATION AUTHORITY
1 HARBOR CENTER
SUITE 130
SUISUN CITY, CA 94585

PRELIMINARY PLANS SUBJECT TO REVISION

NOTES:

1. FOR ACCURATE RIGHT OF WAY DATA, CONTACT RIGHT OF WAY ENGINEERING AT THE DISTRICT OFFICE.
2. FOR LANE CLOSURE DETAILS, SEE TEMPORARY TRAFFIC CONTROL STANDARD PLAN T12.

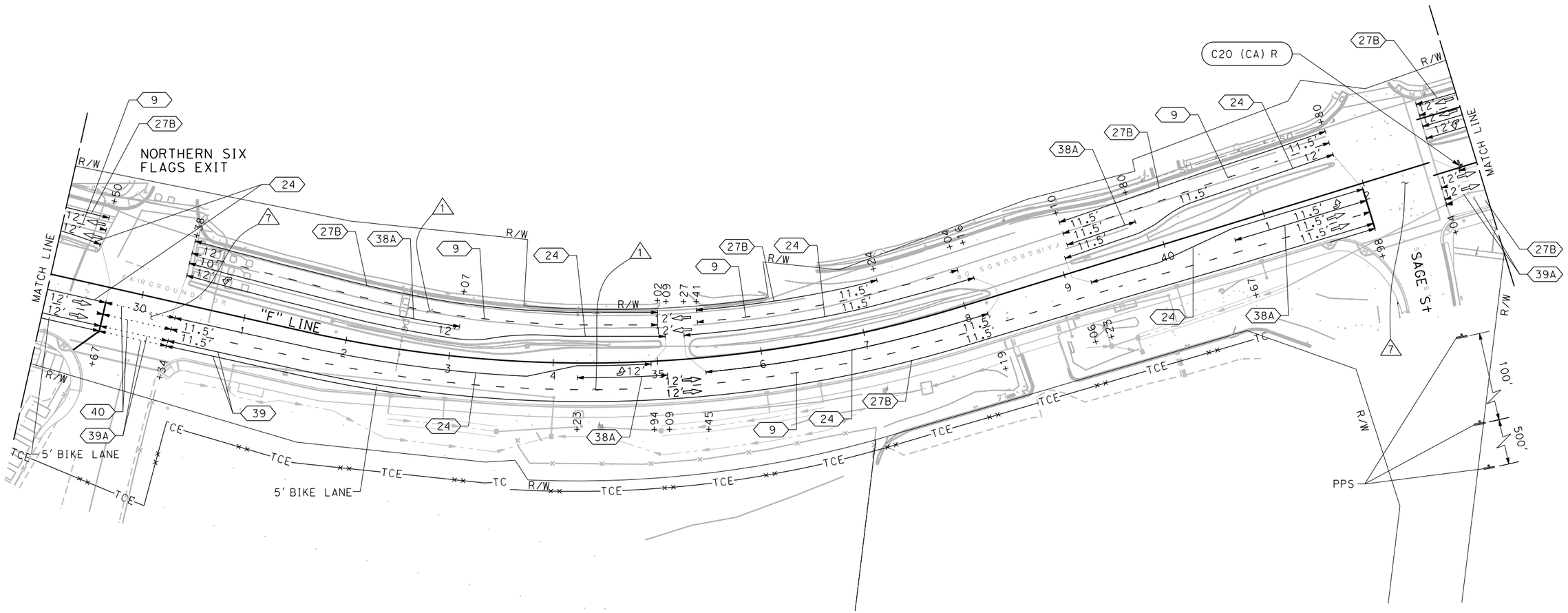

FOR NOTES, ABBREVIATIONS AND LEGEND, SEE SHEET SC-1

APPROVED FOR STAGE CONSTRUCTION WORK ONLY

STAGE CONSTRUCTION AND TRAFFIC HANDLING PLAN STAGE 3C

SCALE: 1" = 50'

SC-15

REVISED BY	DATE REVISED
R.L.	02/15/22

RALEIGH LANGSTON — CARL GIBSON III — CALCULATED-DESIGNED BY — CHECKED BY

CONSULTANT FUNCTIONAL SUPERVISOR: CARL GIBSON III

STATE OF CALIFORNIA - DEPARTMENT OF TRANSPORTATION

X:\SR 37_FAIRGROUNDS DRIVE\000_CAD\Sheets\023-Stg_Cont\MA-Plans\Stage 3\044A4414ma015.dgn

LAST REVISION 00-00-00 | DATE PLOTTED => 9/2/2022 | TIME PLOTTED => 12:53:46 PM

Dist	COUNTY	ROUTE	POST MILES TOTAL PROJECT	SHEET No.	TOTAL SHEETS
04	Sol	37	10.9		

REGISTERED CIVIL ENGINEER DATE

PLANS APPROVAL DATE

REGISTERED PROFESSIONAL ENGINEER No. Exp. CIVIL STATE OF CALIFORNIA

THE STATE OF CALIFORNIA OR ITS OFFICERS OR AGENTS SHALL NOT BE RESPONSIBLE FOR THE ACCURACY OR COMPLETENESS OF SCANNED COPIES OF THIS PLAN SHEET.

WMH CORPORATION
11070 WHITE ROCK RD
SUITE 140
RANCHO CORDOVA
CA 95670

SOLANO TRANSPORTATION AUTHORITY
1 HARBOR CENTER
SUITE 130
SUISUN CITY, CA 94585

PRELIMINARY PLANS SUBJECT TO REVISION

NOTES:

1. FOR ACCURATE RIGHT OF WAY DATA, CONTACT RIGHT OF WAY ENGINEERING AT THE DISTRICT OFFICE.
2. FOR LANE CLOSURE DETAILS, SEE TEMPORARY TRAFFIC CONTROL STANDARD PLAN T12.

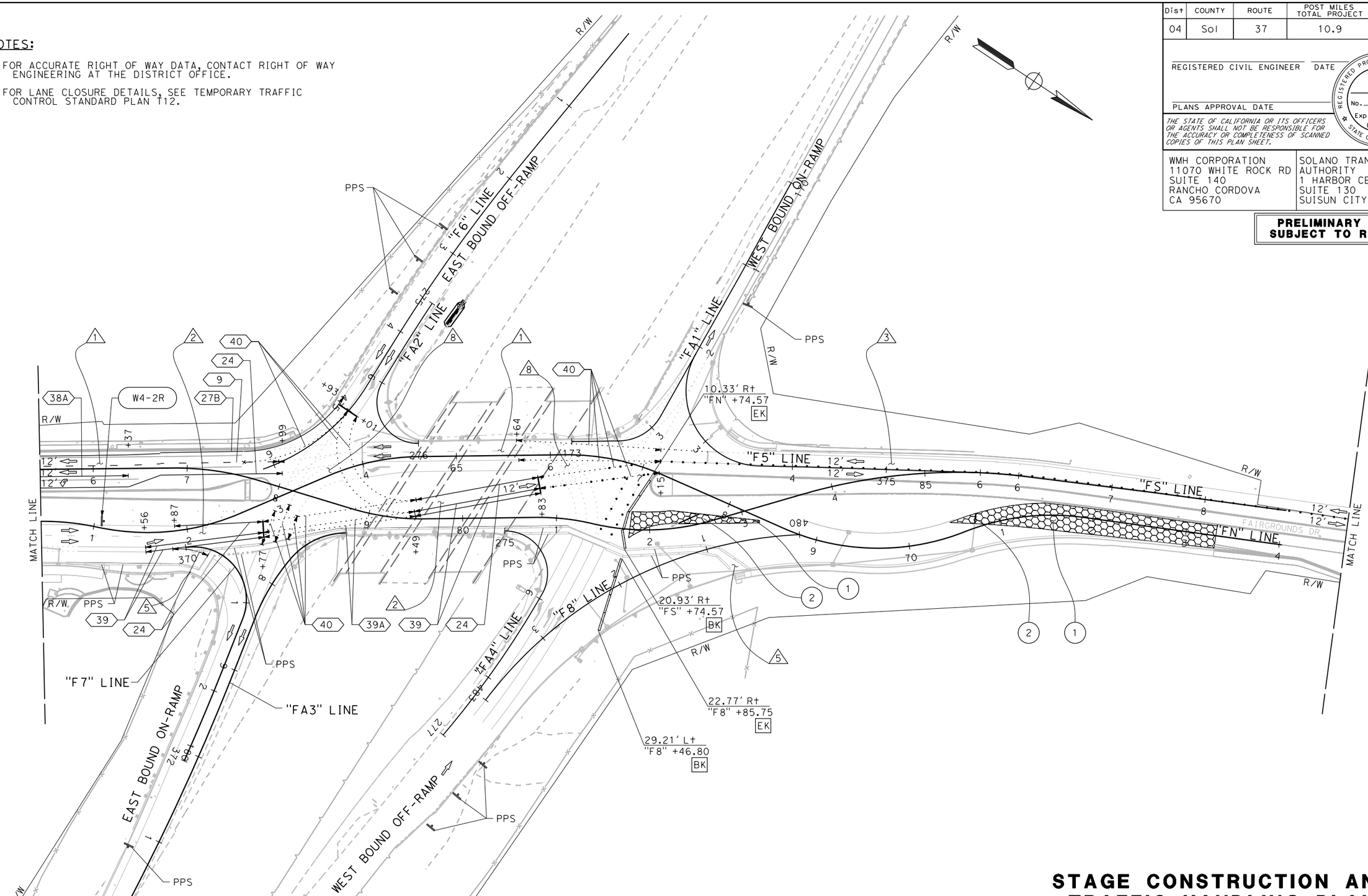

FOR NOTES, ABBREVIATIONS AND LEGEND, SEE SHEET SC-1

APPROVED FOR STAGE CONSTRUCTION WORK ONLY

STAGE CONSTRUCTION AND TRAFFIC HANDLING PLAN STAGE 3C

SCALE: 1" = 50'

SC-16

CALCULATED-DESIGNED BY	RALEIGH LANGSTON
CHECKED BY	CARL GIBSON III
REVISED BY	R.L.
DATE REVISED	02/15/22
CONSULTANT FUNCTIONAL SUPERVISOR	CARL GIBSON III

STATE OF CALIFORNIA - DEPARTMENT OF TRANSPORTATION

Caltrans

X:\SR 37_FAIRGROUNDS DRIVE\000_CAD\Sheets\023-Stg_Const\MA-Plans\Stage 3\044A4414ma016.dgn

LAST REVISION 00-00-00 | DATE PLOTTED => 9/2/2022 | TIME PLOTTED => 12:53:57 PM

Dist	COUNTY	ROUTE	POST MILES TOTAL PROJECT	SHEET No.	TOTAL SHEETS
04	Sol	37	10.9		

REGISTERED CIVIL ENGINEER DATE

PLANS APPROVAL DATE

REGISTERED PROFESSIONAL ENGINEER No. Exp. CIVIL STATE OF CALIFORNIA

THE STATE OF CALIFORNIA OR ITS OFFICERS OR AGENTS SHALL NOT BE RESPONSIBLE FOR THE ACCURACY OR COMPLETENESS OF SCANNED COPIES OF THIS PLAN SHEET.

WMH CORPORATION
11070 WHITE ROCK RD
SUITE 140
RANCHO CORDOVA
CA 95670

SOLANO TRANSPORTATION AUTHORITY
1 HARBOR CENTER
SUITE 130
SUISUN CITY, CA 94585

PRELIMINARY PLANS SUBJECT TO REVISION

NOTE:

FOR ACCURATE RIGHT OF WAY DATA, CONTACT RIGHT OF WAY ENGINEERING AT THE DISTRICT OFFICE.

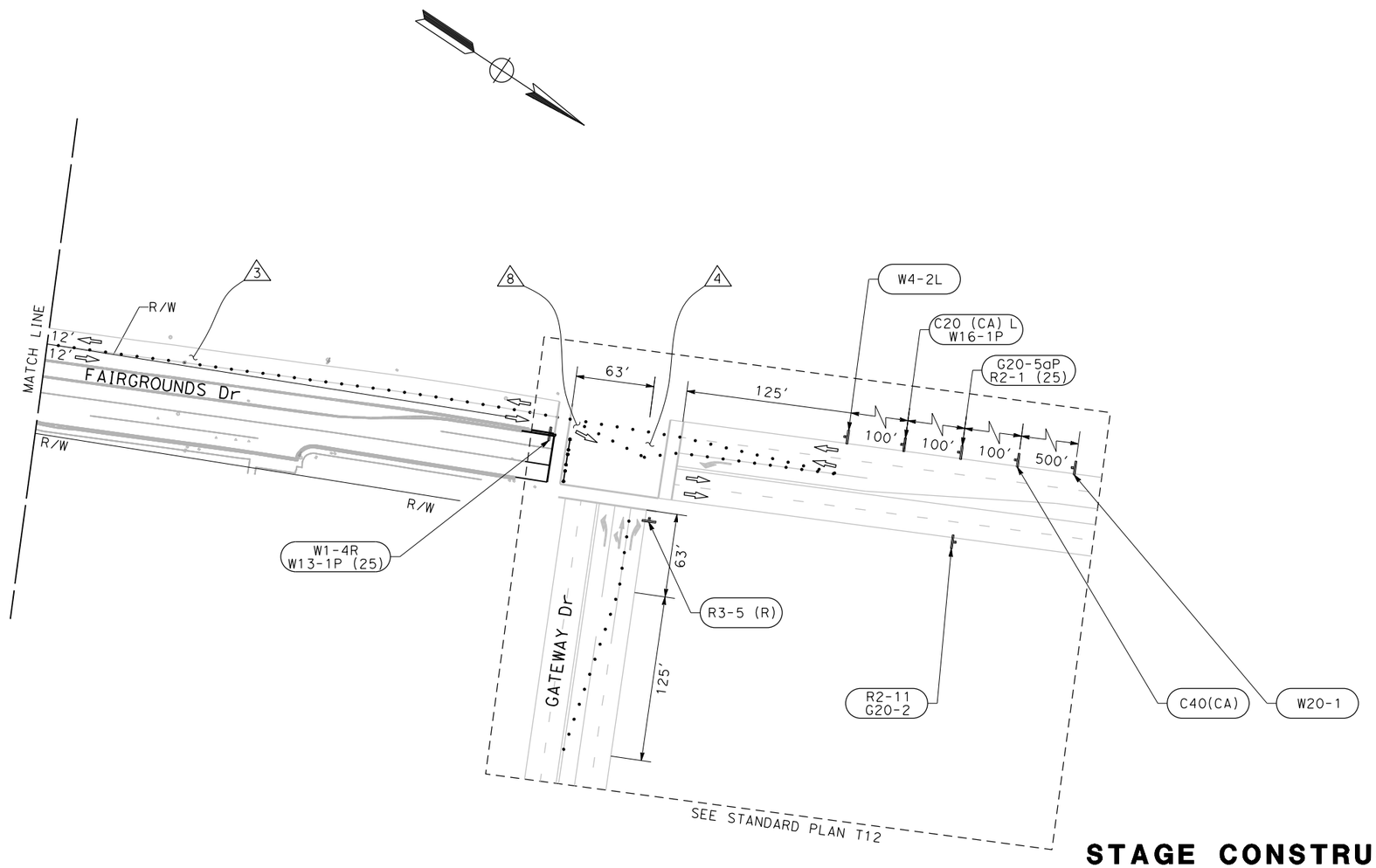

FOR NOTES, ABBREVIATIONS AND LEGEND, SEE SHEET SC-1

APPROVED FOR STAGE CONSTRUCTION WORK ONLY

STAGE CONSTRUCTION AND TRAFFIC HANDLING PLAN STAGE 3C

SCALE: 1" = 50'

SC-17

R.L.	02/15/22
REVISED BY	DATE REVISED
RALEIGH LANGSTON	CARL GIBSON III
CALCULATED-DESIGNED BY	CHECKED BY
CONSULTANT FUNCTIONAL SUPERVISOR	CARL GIBSON III

STATE OF CALIFORNIA - DEPARTMENT OF TRANSPORTATION

Caltrans

X:\SR 37_FAIRGROUNDS DRIVE\000_CAD\Sheets\023-Stg_Cont\MA-Plans\Stage 3\044A4414ma017.dgn

LAST REVISION 00-00-00 | DATE PLOTTED => 9/2/2022 | TIME PLOTTED => 12:54:04 PM

Dist	COUNTY	ROUTE	POST MILES TOTAL PROJECT	SHEET No.	TOTAL SHEETS
04	Sol	37	10.9		

REGISTERED CIVIL ENGINEER DATE

PLANS APPROVAL DATE

REGISTERED PROFESSIONAL ENGINEER No. Exp. CIVIL STATE OF CALIFORNIA

THE STATE OF CALIFORNIA OR ITS OFFICERS OR AGENTS SHALL NOT BE RESPONSIBLE FOR THE ACCURACY OR COMPLETENESS OF SCANNED COPIES OF THIS PLAN SHEET.

WMH CORPORATION
11070 WHITE ROCK RD
SUITE 140
RANCHO CORDOVA
CA 95670

SOLANO TRANSPORTATION AUTHORITY
1 HARBOR CENTER
SUITE 130
SUISUN CITY, CA 94585

PRELIMINARY PLANS SUBJECT TO REVISION

NOTES:

1. FOR ACCURATE RIGHT OF WAY DATA, CONTACT RIGHT OF WAY ENGINEERING AT THE DISTRICT OFFICE.
2. CONSTRUCT DRAINAGE PIPES, MAINTAIN AT LEAST 1 LANE OF TRAFFIC AT ALL TIMES.

STAGE 4 CONSTRUCTION:

(1) REMOVE ANY EXISTING MEDIAN ISLANDS, CONSTRUCT MEDIAN ISLANDS, OVERLAY EXISTING PAVEMENT

(2) REMOVE EXISTING SIDEWALK, CONSTRUCT CURB RAMPS

(3) CONSTRUCT PROPOSED DRAINAGE.

STAGE 4 TRAFFIC:

△1 MAINTAIN 2 THROUGH LANES OF TRAFFIC

△2 MAINTAIN 2 THROUGH LANES OF TRAFFIC, BIKE LANE

△3 MAINTAIN PROTECTED PEDESTRIAN ROUTE, 5' MINIMUM WIDTH

△4 CONTROLLED BY EXISTING TRAFFIC SIGNAL

△5 CONTROLLED BY TEMPORARY TRAFFIC SIGNAL

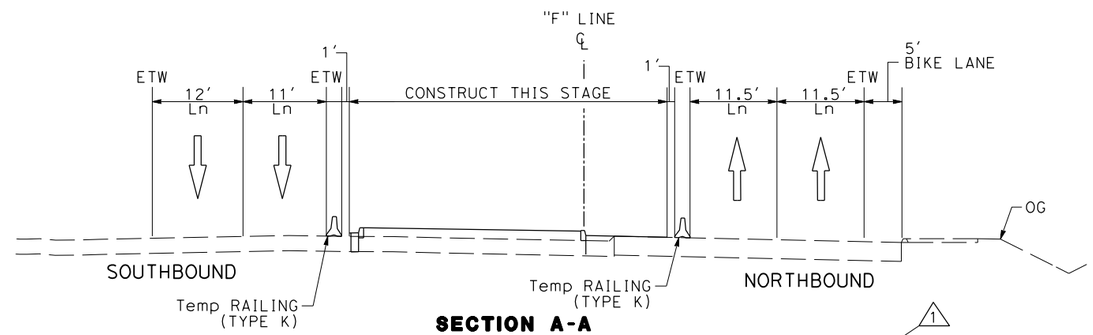

SECTION A-A

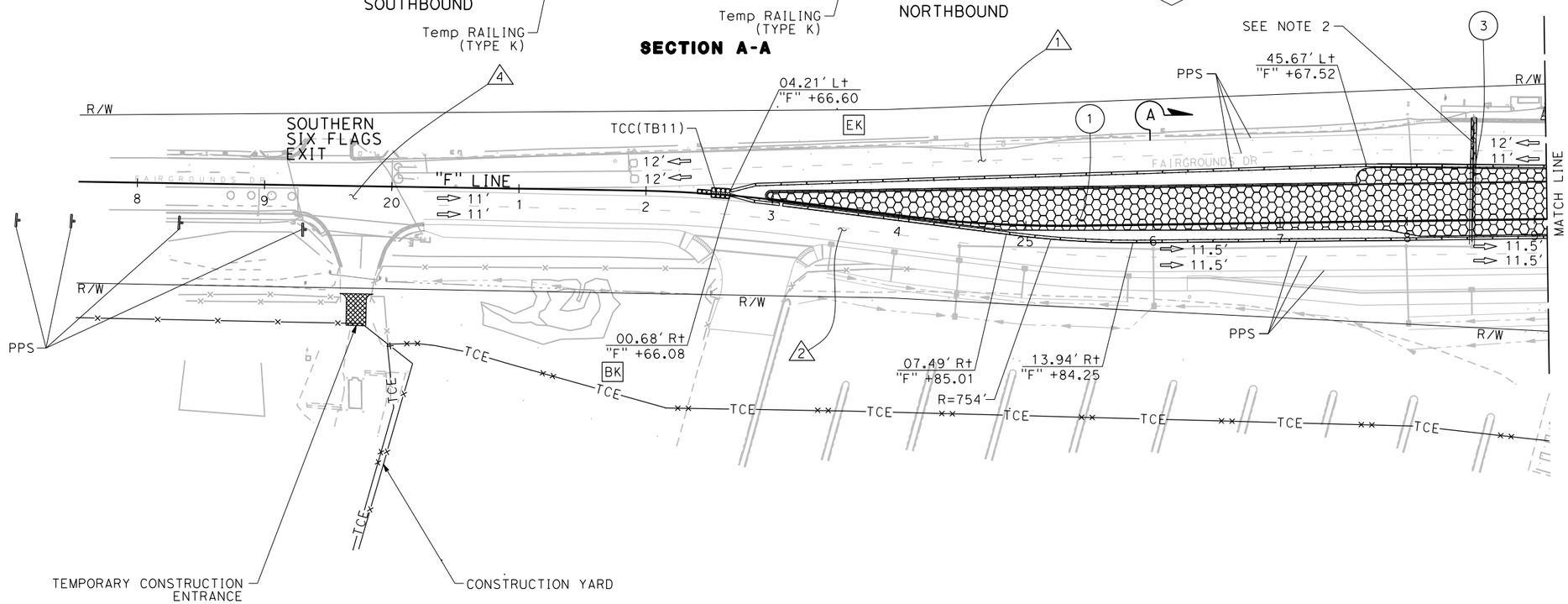

FOR NOTES, ABBREVIATIONS AND LEGEND, SEE SHEET SC-1

APPROVED FOR STAGE CONSTRUCTION WORK ONLY

STAGE CONSTRUCTION AND TRAFFIC HANDLING PLAN STAGE 4

SCALE: 1" = 50'

SC-18

REVISED BY	DATE REVISED
R.L.	02/15/22

RALEIGH LANGSTON — CALCULATED-DESIGNED BY
CARL GIBSON III — CHECKED BY
CARL GIBSON III — CONSULTANT FUNCTIONAL SUPERVISOR

STATE OF CALIFORNIA - DEPARTMENT OF TRANSPORTATION

X:\SR 37_FAIRGROUNDS DRIVE\000_CAD\Sheets\023-Stg_Cont\MA-Plans\Stage 4\044A4414ma018.dgn

LAST REVISION 00-00-00 | DATE PLOTTED => 9/2/2022 | TIME PLOTTED => 12:54:39 PM

BORDER LAST REVISED 7/2/2010 | USERNAME => jvaldivia | DGN FILE => 044A4414ma018.dgn | RELATIVE BORDER SCALE IS IN INCHES 0 1 2 3 | UNIT 0738 | PROJECT NUMBER & PHASE 04000205841

Dist	COUNTY	ROUTE	POST MILES TOTAL PROJECT	SHEET No.	TOTAL SHEETS
04	Sol	37	10.9		

REGISTERED CIVIL ENGINEER DATE

PLANS APPROVAL DATE

REGISTERED PROFESSIONAL ENGINEER No. Exp. CIVIL STATE OF CALIFORNIA

THE STATE OF CALIFORNIA OR ITS OFFICERS OR AGENTS SHALL NOT BE RESPONSIBLE FOR THE ACCURACY OR COMPLETENESS OF SCANNED COPIES OF THIS PLAN SHEET.

WMH CORPORATION
11070 WHITE ROCK RD
SUITE 140
RANCHO CORDOVA
CA 95670

SOLANO TRANSPORTATION AUTHORITY
1 HARBOR CENTER
SUITE 130
SUISUN CITY, CA 94585

PRELIMINARY PLANS SUBJECT TO REVISION

NOTE:

FOR ACCURATE RIGHT OF WAY DATA, CONTACT RIGHT OF WAY ENGINEERING AT THE DISTRICT OFFICE.

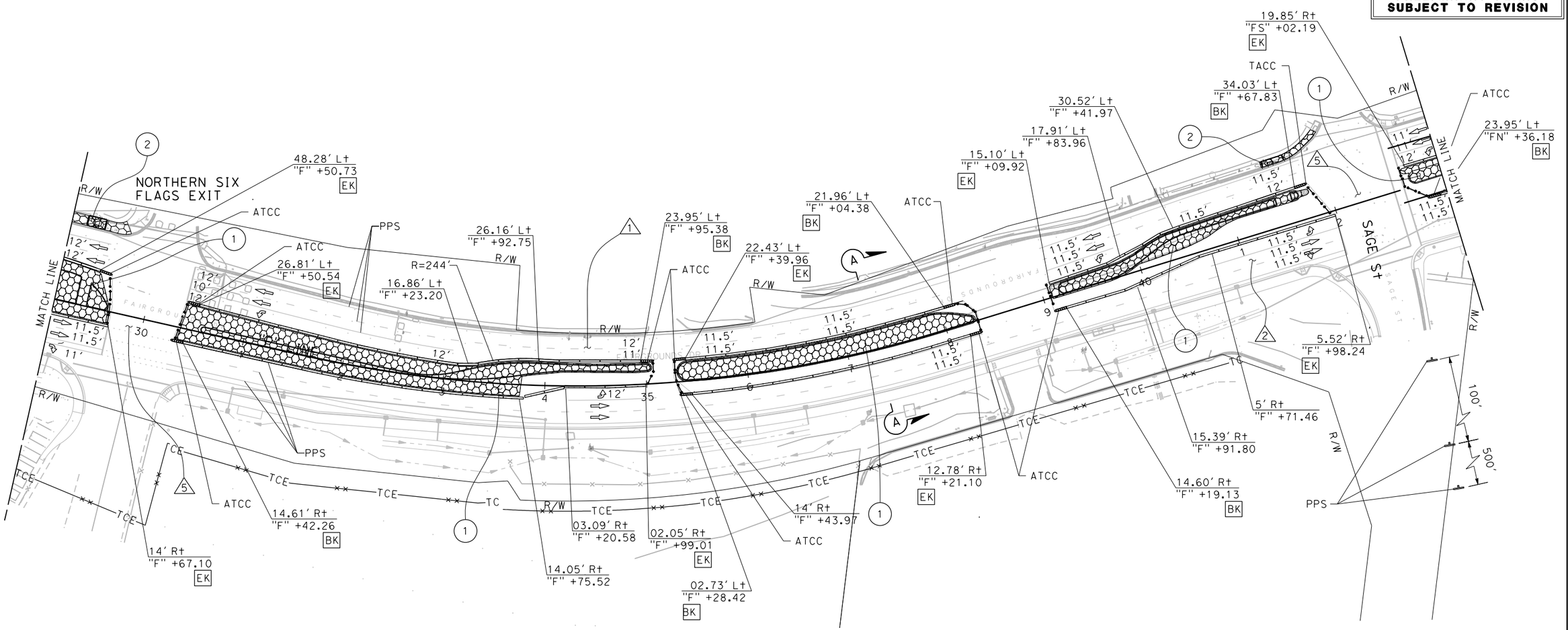

FOR NOTES, ABBREVIATIONS AND LEGEND, SEE SHEET SC-1

APPROVED FOR STAGE CONSTRUCTION WORK ONLY

STAGE CONSTRUCTION AND TRAFFIC HANDLING PLAN STAGE 4

SCALE: 1" = 50'

SC-19

REVISED BY	DATE REVISED
R.L.	02/15/22

RALEIGH LANGSTON — CALCULATED-DESIGNED BY
CARL GIBSON III — CHECKED BY
CARL GIBSON III — CONSULTANT FUNCTIONAL SUPERVISOR

STATE OF CALIFORNIA - DEPARTMENT OF TRANSPORTATION

X:\SR 37_FAIRGROUNDS DRIVE\000_CAD\Sheets\023-Stg_Cont\MA-Plans\Stage 4\044A4414ma019.dgn

LAST REVISION 00-00-00 | DATE PLOTTED => 9/2/2022 | TIME PLOTTED => 12:54:45 PM

BORDER LAST REVISED 7/2/2010 | USERNAME => jvaldivia | DGN FILE => 044A4414ma019.dgn | RELATIVE BORDER SCALE IS IN INCHES 0 1 2 3 | UNIT 0738 | PROJECT NUMBER & PHASE 04000205841

Dist	COUNTY	ROUTE	POST MILES TOTAL PROJECT	SHEET No.	TOTAL SHEETS
04	Sol	37	10.9		

REGISTERED CIVIL ENGINEER DATE

PLANS APPROVAL DATE

REGISTERED PROFESSIONAL ENGINEER No. Exp. CIVIL STATE OF CALIFORNIA

THE STATE OF CALIFORNIA OR ITS OFFICERS OR AGENTS SHALL NOT BE RESPONSIBLE FOR THE ACCURACY OR COMPLETENESS OF SCANNED COPIES OF THIS PLAN SHEET.

WMH CORPORATION
11070 WHITE ROCK RD
SUITE 140
RANCHO CORDOVA
CA 95670

SOLANO TRANSPORTATION AUTHORITY
1 HARBOR CENTER
SUITE 130
SUISUN CITY, CA 94585

PRELIMINARY PLANS SUBJECT TO REVISION

NOTES:

1. FOR ACCURATE RIGHT OF WAY DATA, CONTACT RIGHT OF WAY ENGINEERING AT THE DISTRICT OFFICE.
2. CONSTRUCT DRAINAGE PIPES, MAINTAIN AT LEAST 1 LANE OF TRAFFIC AT ALL TIMES.

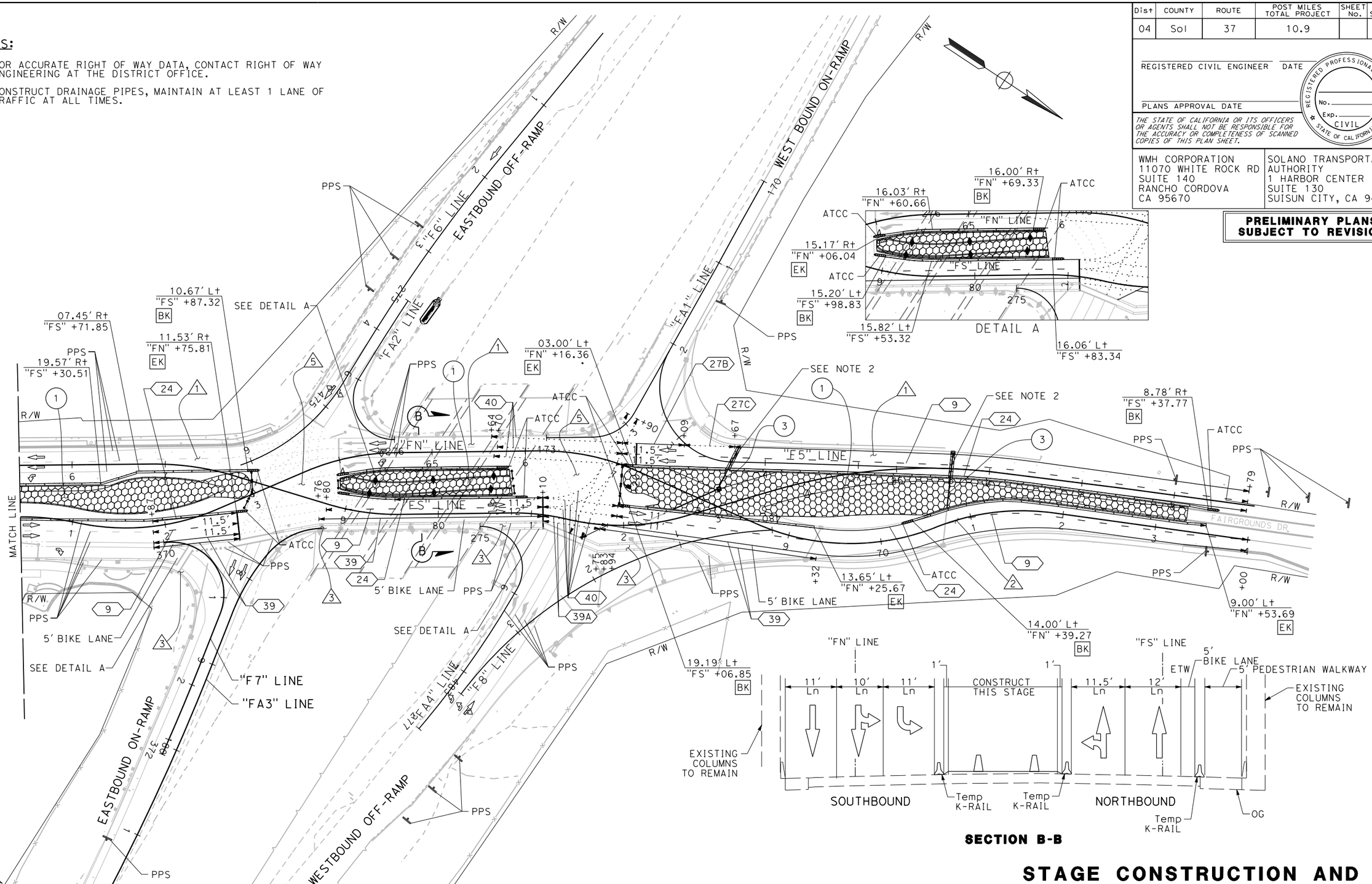

FOR NOTES, ABBREVIATIONS AND LEGEND, SEE SHEET SC-1

APPROVED FOR STAGE CONSTRUCTION WORK ONLY

STAGE CONSTRUCTION AND TRAFFIC HANDLING PLAN STAGE 4

SCALE: 1" = 50'

SC-20

R.L.	02/15/22
REVISED BY	DATE REVISED
RALEIGH LANGSTON	CARL GIBSON III
CALCULATED-DESIGNED BY	CHECKED BY
CONSULTANT FUNCTIONAL SUPERVISOR	CARL GIBSON III

STATE OF CALIFORNIA - DEPARTMENT OF TRANSPORTATION

Caltrans

X:\SR 37_FAIRGROUNDS DRIVE\000_CAD\Sheets\023-Stg_Cont\MA-Plans\Stage 4\044A4414ma020.dgn

LAST REVISION 00-00-00 DATE PLOTTED => 9/2/2022 TIME PLOTTED => 12:54:51 PM

BORDER LAST REVISED 7/2/2010 | USERNAME => jvaldivia DGN FILE => 044A4414ma020.dgn | RELATIVE BORDER SCALE IS IN INCHES 0 1 2 3 | UNIT 0738 | PROJECT NUMBER & PHASE 04000205841

Dist	COUNTY	ROUTE	POST MILES TOTAL PROJECT	SHEET No.	TOTAL SHEETS
04	Sol	37	10.9		

REGISTERED CIVIL ENGINEER DATE

PLANS APPROVAL DATE

REGISTERED PROFESSIONAL ENGINEER No. Exp. CIVIL STATE OF CALIFORNIA

THE STATE OF CALIFORNIA OR ITS OFFICERS OR AGENTS SHALL NOT BE RESPONSIBLE FOR THE ACCURACY OR COMPLETENESS OF SCANNED COPIES OF THIS PLAN SHEET.

WMH CORPORATION
11070 WHITE ROCK RD
SUITE 140
RANCHO CORDOVA
CA 95670

SOLANO TRANSPORTATION AUTHORITY
1 HARBOR CENTER
SUITE 130
SUISUN CITY, CA 94585

PRELIMINARY PLANS SUBJECT TO REVISION

NOTES:

1. FOR ACCURATE RIGHT OF WAY DATA, CONTACT RIGHT OF WAY ENGINEERING AT THE DISTRICT OFFICE.
2. AS LAST ORDER OF WORK, PLACE FINAL LIFT OF HMA, RHMA-O AND FINAL STRIPING AS SHOWN ON PD SHEETS.

STAGE 5 CONSTRUCTION:

(1) REMOVE ANY EXISTING MEDIAN ISLANDS, CONSTRUCT MEDIAN ISLANDS, AND OVERLAY EXISTING PAVEMENT

(2) CONSTRUCT FINAL STRIPING. SEE STRIPING PLANS FOR MORE DETAILS.

(3) CONSTRUCT PROPOSED DRAINAGE.

STAGE 5 TRAFFIC:

△1 MAINTAIN 2 THROUGH LANES OF TRAFFIC

△2 MAINTAIN 2 TO 3 THROUGH LANES OF TRAFFIC, BIKE LANE

△3 MAINTAIN ADA PEDESTRIAN ACCESS THROUGH ISLANDS AT ALL TIMES

△4 CONTROLLED BY EXISTING TRAFFIC SIGNAL

△5 CONTROLLED BY PERMANENT TRAFFIC SIGNAL

△6 FLAGGERS TO CONTROL INTERSECTION, ROUTE PEDESTRIANS

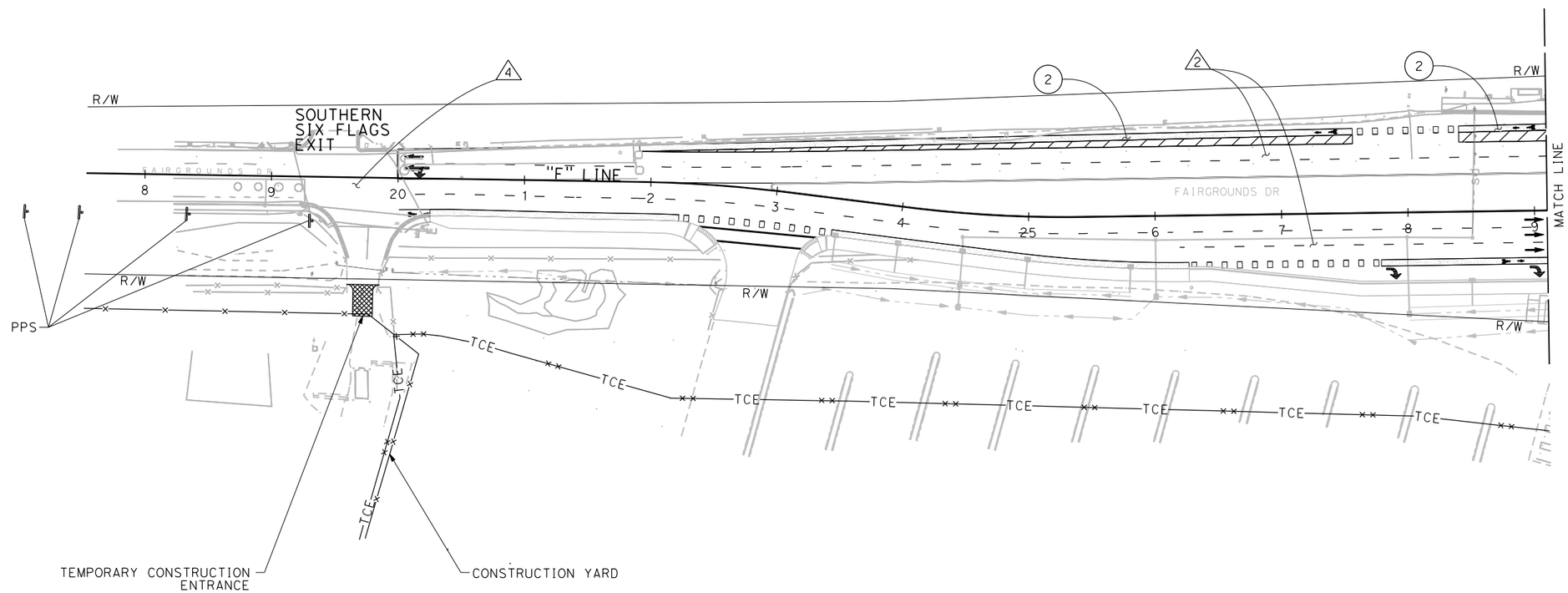

FOR NOTES, ABBREVIATIONS AND LEGEND, SEE SHEET SC-1

APPROVED FOR STAGE CONSTRUCTION WORK ONLY

STAGE CONSTRUCTION AND TRAFFIC HANDLING PLAN STAGE 5

SCALE: 1" = 50'

SC-21

REVISED BY	DATE REVISED
R.L.	02/15/22

RALEIGH LANGSTON — CALCULATED-DESIGNED BY
CARL GIBSON III — CHECKED BY
CARL GIBSON III — CONSULTANT FUNCTIONAL SUPERVISOR

STATE OF CALIFORNIA - DEPARTMENT OF TRANSPORTATION

X:\SR 37_FAIRGROUNDS DRIVE\000_CAD\Sheets\023-Stg_Cont\MA-Plans\Stage 5\044A4414ma021.dgn

LAST REVISION 00-00-00 | DATE PLOTTED => 9/2/2022 | TIME PLOTTED => 12:55:33 PM

Dist	COUNTY	ROUTE	POST MILES TOTAL PROJECT	SHEET No.	TOTAL SHEETS
04	Sol	37	10.9		

REGISTERED CIVIL ENGINEER DATE

PLANS APPROVAL DATE

REGISTERED PROFESSIONAL ENGINEER No. Exp. CIVIL STATE OF CALIFORNIA

THE STATE OF CALIFORNIA OR ITS OFFICERS OR AGENTS SHALL NOT BE RESPONSIBLE FOR THE ACCURACY OR COMPLETENESS OF SCANNED COPIES OF THIS PLAN SHEET.

WMH CORPORATION
11070 WHITE ROCK RD
SUITE 140
RANCHO CORDOVA
CA 95670

SOLANO TRANSPORTATION AUTHORITY
1 HARBOR CENTER
SUITE 130
SUISUN CITY, CA 94585

PRELIMINARY PLANS SUBJECT TO REVISION

NOTES:

1. FOR ACCURATE RIGHT OF WAY DATA, CONTACT RIGHT OF WAY ENGINEERING AT THE DISTRICT OFFICE.
2. AS LAST ORDER OF WORK, PLACE FINAL LIFT OF HMA, RHMA-O AND FINAL STRIPING AS SHOWN ON PD SHEETS.
3. SECTION CUT LOCATION ON SC-3.

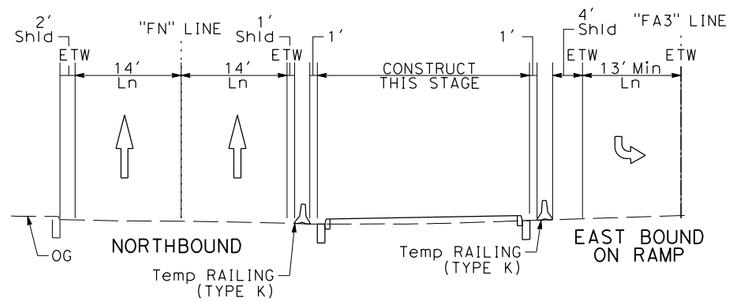

SECTION A-A
SEE NOTE 3

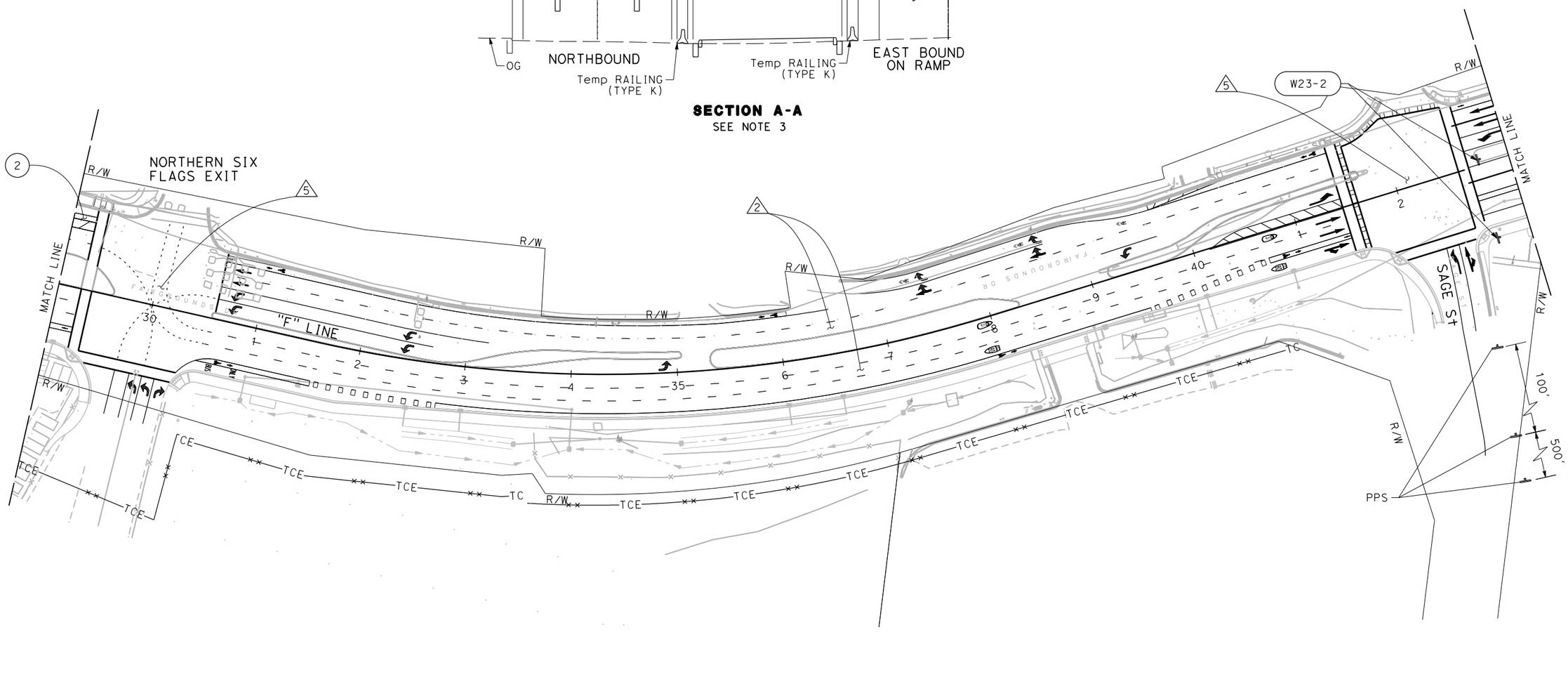

FOR NOTES, ABBREVIATIONS AND LEGEND, SEE SHEET SC-1

APPROVED FOR STAGE CONSTRUCTION WORK ONLY

STAGE CONSTRUCTION AND TRAFFIC HANDLING PLAN STAGE 5

SCALE: 1" = 50'

SC-22

STATE OF CALIFORNIA - DEPARTMENT OF TRANSPORTATION	CONSULTANT FUNCTIONAL SUPERVISOR	CALCULATED-DESIGNED BY	CHECKED BY
Caltrans	CARL GIBSON III	CARL GIBSON III	

RALEIGH LANGSTON	REVISED BY	R.L.
CARL GIBSON III	DATE REVISED	02/15/22

X:\SR 37_FAIRGROUNDS DRIVE\000_CAD\Sheets\023-Stg_Cont\MA-Plans\Stage 5\044A4414ma022.dgn

LAST REVISION	DATE PLOTTED => 9/2/2022
00-00-00	TIME PLOTTED => 12:55:45 PM

Dist	COUNTY	ROUTE	POST MILES TOTAL PROJECT	SHEET No.	TOTAL SHEETS
04	Sol	37	10.9		

REGISTERED CIVIL ENGINEER DATE

PLANS APPROVAL DATE

REGISTERED PROFESSIONAL ENGINEER No. Exp. CIVIL STATE OF CALIFORNIA

THE STATE OF CALIFORNIA OR ITS OFFICERS OR AGENTS SHALL NOT BE RESPONSIBLE FOR THE ACCURACY OR COMPLETENESS OF SCANNED COPIES OF THIS PLAN SHEET.

WMH CORPORATION
11070 WHITE ROCK RD
SUITE 140
RANCHO CORDOVA
CA 95670

SOLANO TRANSPORTATION AUTHORITY
1 HARBOR CENTER
SUITE 130
SUISUN CITY, CA 94585

PRELIMINARY PLANS SUBJECT TO REVISION

NOTES:

1. FOR ACCURATE RIGHT OF WAY DATA, CONTACT RIGHT OF WAY ENGINEERING AT THE DISTRICT OFFICE.
2. AS LAST ORDER OF WORK, PLACE FINAL LIFT OF HMA, RHMA-O AND FINAL STRIPING AS SHOWN ON PD SHEETS.
3. FOR SECTION A-A, SEE SHEET SC-14.
4. CONSTRUCT DRAINAGE PIPES, MAINTAIN AT LEAST ONE LANE OF TRAFFIC AT ALL TIMES.

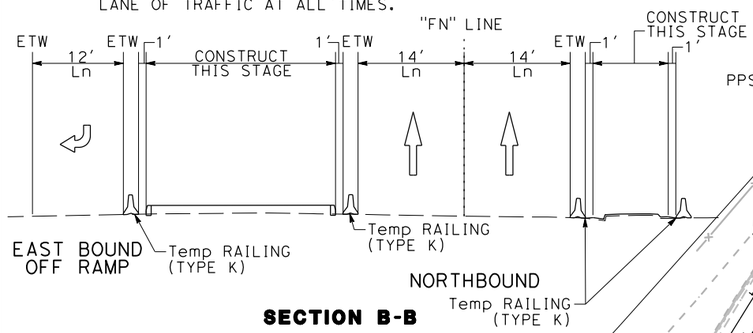

SECTION B-B

SECTION D-D

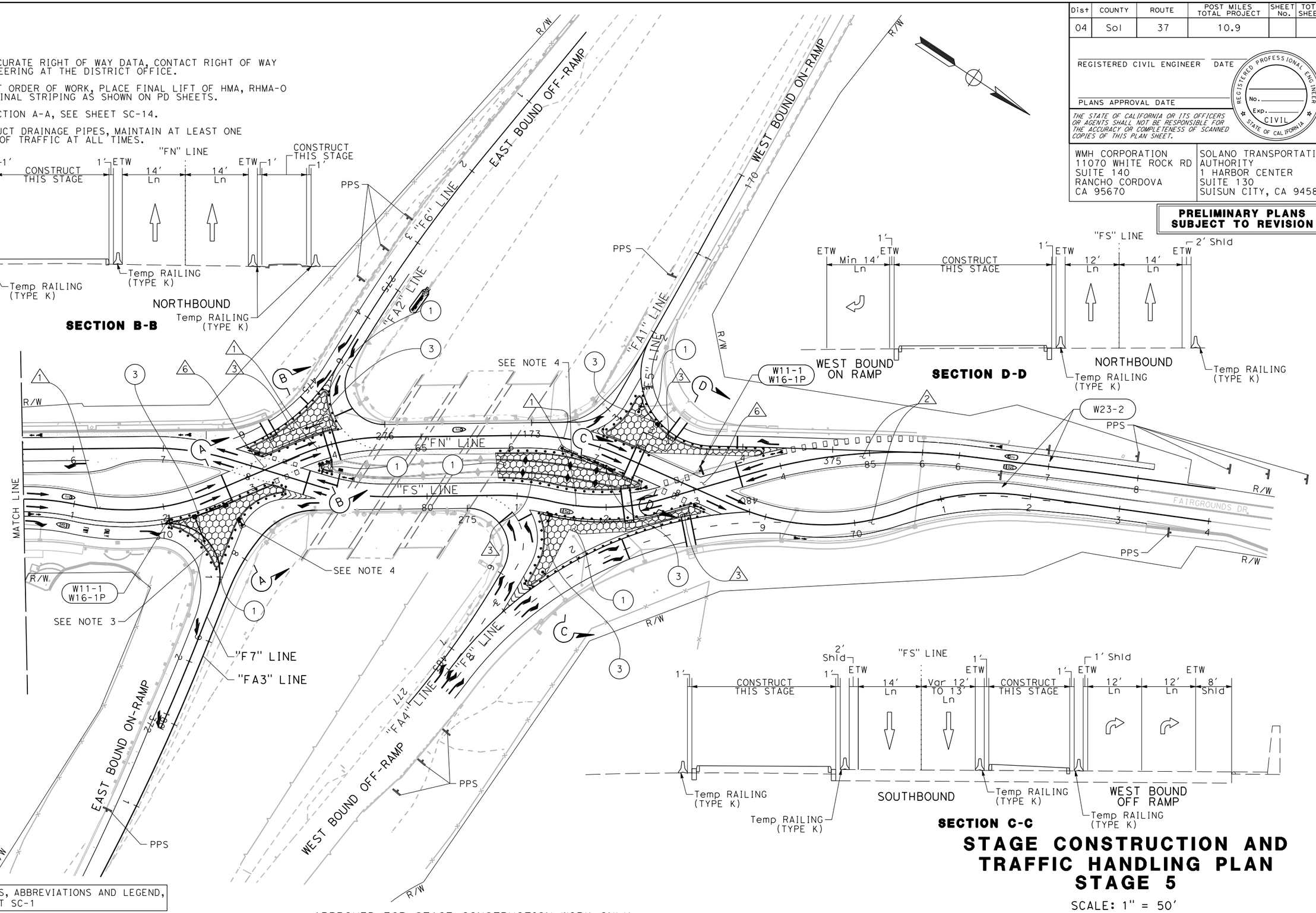

SECTION C-C

FOR NOTES, ABBREVIATIONS AND LEGEND, SEE SHEET SC-1

APPROVED FOR STAGE CONSTRUCTION WORK ONLY

STAGE CONSTRUCTION AND TRAFFIC HANDLING PLAN STAGE 5

SCALE: 1" = 50'

SC-23

STATE OF CALIFORNIA - DEPARTMENT OF TRANSPORTATION

Caltrans

CONSULTANT FUNCTIONAL SUPERVISOR: CARL GIBSON III

CALCULATED-DESIGNED BY: RALEIGH LANGSTON | REVISED BY: R.L.

CHECKED BY: CARL GIBSON III | DATE REVISED: 02/15/22

X:\SR 37_FAIRGROUNDS DRIVE\000_CAD\Sheets\023-Stg_Cont\MA-Plans\Stage 5\044A4414ma023.dgn

LAST REVISION: 00-00-00 | DATE PLOTTED => 9/2/2022 | TIME PLOTTED => 12:55:54 PM

BORDER LAST REVISED 7/2/2010 | USERNAME => jvaldivia | DGN FILE => 044A4414ma023.dgn | RELATIVE BORDER SCALE IS IN INCHES 0 1 2 3 | UNIT 0738 | PROJECT NUMBER & PHASE 04000205841

Dist	COUNTY	ROUTE	POST MILES TOTAL PROJECT	SHEET No.	TOTAL SHEETS
04	Sol	37	10.9		

REGISTERED CIVIL ENGINEER DATE

PLANS APPROVAL DATE

REGISTERED PROFESSIONAL ENGINEER No. Exp. CIVIL STATE OF CALIFORNIA

THE STATE OF CALIFORNIA OR ITS OFFICERS OR AGENTS SHALL NOT BE RESPONSIBLE FOR THE ACCURACY OR COMPLETENESS OF SCANNED COPIES OF THIS PLAN SHEET.

WMH CORPORATION
11070 WHITE ROCK RD
SUITE 140
RANCHO CORDOVA
CA 95670

SOLANO TRANSPORTATION AUTHORITY
1 HARBOR CENTER
SUITE 130
SUISUN CITY, CA 94585

PRELIMINARY PLANS SUBJECT TO REVISION

TEMPORARY TRAFFIC CONTROL DEVICE QUANTITIES

SHEET No.	STAGE	STATION LIMITS FROM		TO		TEMPORARY RAILING (TYPE K)	PORTABLE DELINEATOR	TEMPORARY CRASH CUSHION (TS11) (N)	TEMPORARY CRASH CUSHION MODULE	ALTERNATIVE TEMPORARY CRASH CUSHION	TEMPORARY PEDESTRIAN RAMP (WOOD) (N)	TYPE III BARRICADE	TEMPORARY CHAIN LINK FENCE (TYPE CL-6)	SUBGRADE ENHANCEMENT GEOTEXTILE (CLASS B2)	HOT MIX ASPHALT (TYPE A)	NOTES
						LF	EA	EA	EA	EA	EA	EA	LF	SQYD	TON	
SC-2		"F"	20+27	"F"	29+40								985			
SC-2		"F"	20+25							1						
SC-2		"F"	20+25	"F"	29+47	1,080										
SC-2		"F"	20+00	"F"	29+43		45								196	Temp Ped PATH
SC-2		"F"	27+85	"F"	28+85	100										
SC-3		"F"	29+21							1						
SC-3		"F"	29+21	"F"	29+41	20										
SC-3		"F"	29+47					1	11							
SC-3		"F"	29+47	"F"	29+74	160										
SC-3		"F"	29+63	"F"	29+74							2				
SC-3		"F"	30+25					1	11							
SC-3		"F"	30+25	"F"	30+31	60										
SC-3		"F"	30+31									1				
SC-3		"F"	31+46							1						
SC-3		"F"	31+46	"F"	42+08	1,300										
SC-3		"F"	37+88	"F"	40+28		21									
SC-3		"F"	39+10									1				
SC-3		"F"	42+08							1						
SC-3		"F"	42+50							1						
SC-3	STAGE 1	"F"	42+50	"F"	42+46	120										
SC-3		"F"	42+55	"F"	42+55	80										
SC-3		"FN"	60+11							1						
SC-3		"FN"	60+11	"F7"	371+08	300										
SC-4		"F7"	371+08	"FA3"	179+17		14									
SC-4		"FA3"	179+17							1						
SC-4		"FA3"	179+17	"FA3"	184+20	500										
SC-4		"FN"	62+43	"FN"	62+82		24									
SC-4		"FN"	62+43	"FN"	62+82		8									
SC-4		"FN"	62+49	"FN"	62+71									38	20	
SC-4		"FA3"	178+11				5									
SC-4		"FA3"	178+11	"FA4"	277+61	620	4									
SC-4		"FA4"	277+61					1	11							
SC-4		"F6"	474+00							1						
SC-4		"F6"	474+00	"F6"	474+60	60										
SC-4		"F6"	475+03	"F6"	475+65	60				1						
SC-4		"FA4"	277+41					1	11							
SC-4		"FA4"	277+41	"FN"	72+45	800										
SC-4		"FS"	81+48	"FS"	83+00									325	170	
SC-4		"FN"	72+45	"FN"	72+85		5									
SC-4		"FN"	72+98	"FN"	73+43	60				1						
SUBTOTAL SCQ-1						5,320	126	4	44	10	0	4	985	363	386	

STAGE CONSTRUCTION QUANTITIES
SCQ-1

REVISED BY	DATE REVISED
R.L.	02/15/22

RALEIGH LANGSTON — CARL GIBSON III
CALCULATED-DESIGNED BY — CHECKED BY
CONSULTANT FUNCTIONAL SUPERVISOR — CARL GIBSON III

STATE OF CALIFORNIA - DEPARTMENT OF TRANSPORTATION
Caltrans

X:\SR 37_FAIRGROUNDS DRIVE\000_CAD\Sheets\023-Stg_Cont\MC-Quantities\044A4414mc001.dgn

LAST REVISION 00-00-00 — DATE PLOTTED => 9/2/2022 TIME PLOTTED => 12:41:59 PM

Dist	COUNTY	ROUTE	POST MILES TOTAL PROJECT	SHEET No.	TOTAL SHEETS
04	Sol	37	10.9		

PRELIMINARY PLANS SUBJECT TO REVISION

REGISTERED CIVIL ENGINEER DATE

PLANS APPROVAL DATE

REGISTERED PROFESSIONAL ENGINEER No. Exp. CIVIL STATE OF CALIFORNIA

THE STATE OF CALIFORNIA OR ITS OFFICERS OR AGENTS SHALL NOT BE RESPONSIBLE FOR THE ACCURACY OR COMPLETENESS OF SCANNED COPIES OF THIS PLAN SHEET.

WMH CORPORATION
11070 WHITE ROCK RD
SUITE 140
RANCHO CORDOVA
CA 95670

SOLANO TRANSPORTATION AUTHORITY
1 HARBOR CENTER
SUITE 130
SUISUN CITY, CA 94585

TEMPORARY TRAFFIC CONTROL DEVICE QUANTITIES

SHEET No.	STAGE	STATION LIMITS FROM		TO		TEMPORARY RAILING (TYPE K)	PORTABLE DELINEATOR	TEMPORARY CRASH CUSHION (TS11) (N)	TEMPORARY CRASH CUSHION MODULE	ALTERNATIVE TEMPORARY CRASH CUSHION	TEMPORARY PEDESTRIAN RAMP (WOOD) (N)	TYPE III BARRICADE	TEMPORARY CHAIN LINK FENCE (TYPE CL-6)	SUBGRADE ENHANCEMENT GEOTEXTILE (CLASS B2)	HOT MIX ASPHALT (TYPE A)	NOTES
						LF	EA	EA	EA	EA	EA	EA	LF	SQYD	TON	
SC-5	STAGE 2	"FN"	23+41	"FN"	29+28		51									
SC-6		"FN"	33+75	"FN"	41+79		69									
SC-6		"FN"	41+52									1				
SC-7		"FN"	67+77	"FN"	73+24		49									
SC-7		"FA5"	374+91									1				
SC-7		"FN"	60+78	"FN"	62+20	160										
SC-7		"FN"	61+69	"FS"	78+63		26									
SC-7		"FN"	61+12								1					
SC-7		"FN"	62+58							1						
SC-7		"FN"	62+58	"FN"	62+78	20										
SC-7		"FA2"	275+63							1						
SC-7		"F6"	472+84	"FA1"	172+36	620										
SC-7		"FA3"	177+35							1						
SC-7		"FA3"	177+35	"FS"	80+95	260										
SC-7		"FS"	80+43	"FS"	81+05	60										
SC-7		"FS"	81+56							1						
SC-7		"FS"	81+56	"FS"	81+60	20										
SC-7		"FS"	81+75							1						
SC-7		"FS"	81+75	"F8"	480+77	160										
SC-7		"FS"	81+89							1						
SC-7		"FS"	81+89	"F8"	480+77	120										
SC-7		"F8"	482+87	"F8"	482+24	80										
SC-7		"FA1"	171+71	"F5"	374+77	300										
SC-7		"F5"	374+77							1						
SC-8	STAGE 3A	"F"	23+33	"F"	27+65		24									
SC-8		"F"	27+69									6				
SC-8		"F"	23+30	"F"	41+79		140									
SC-9		"F"	29+21	"F"	33+94		40									
SC-9		"F"	35+01	"F"	35+38		4									
SC-9		"F"	37+35	"F"	40+24		24									
SC-9		"F"	41+79	"F"	42+09		6									
SC-9		"F"	41+79	"FS"	76+30		37									
SC-10		"FN"	60+75	"F7"	370+19	140										
SC-10		"FN"	61+13								1					
SC-10		"F7"	370+32							1						
SC-10		"F7"	370+32	"FN"	62+65	60										
SC-10		"F7"	370+32	"FN"	62+65		9									
SC-10		"FA3"	177+40							1						
SC-10		"FA3"	177+40	"FS"	81+13	280										
SC-10		"FA3"	177+53	"FA3"	177+30		6									
SC-10		"FS"	80+53	"FS"	81+14	60										
SC-10		"F8"	481+91	"F8"	480+57	160										
SC-10		"F8"	481+96	"F8"	480+79	120										
SUBTOTAL SCQ-2						2,620	485	0	0	9	2	8	0	0	0	0

STAGE CONSTRUCTION QUANTITIES

SCQ-2

R.L.	02/15/22	RALEIGH LANGSTON	CARL GIBSON III
REVISED BY	DATE REVISED	CALCULATED-DESIGNED BY	CHECKED BY
CONSULTANT FUNCTIONAL SUPERVISOR	CARL GIBSON III		

STATE OF CALIFORNIA - DEPARTMENT OF TRANSPORTATION

Caltrans

X:\SR 37_FAIRGROUNDS DRIVE\000_CAD\Sheets\023-Stg_Cont\MC-Quantities\044A4414mc002.dgn

LAST REVISION 00-00-00 | DATE PLOTTED => 9/2/2022 | TIME PLOTTED => 12:42:02 PM

Dist	COUNTY	ROUTE	POST MILES TOTAL PROJECT	SHEET No.	TOTAL SHEETS
04	Sol	37	10.9		

REGISTERED CIVIL ENGINEER DATE

PLANS APPROVAL DATE

REGISTERED PROFESSIONAL ENGINEER No. Exp. CIVIL STATE OF CALIFORNIA

THE STATE OF CALIFORNIA OR ITS OFFICERS OR AGENTS SHALL NOT BE RESPONSIBLE FOR THE ACCURACY OR COMPLETENESS OF SCANNED COPIES OF THIS PLAN SHEET.

WMH CORPORATION
11070 WHITE ROCK RD
SUITE 140
RANCHO CORDOVA
CA 95670

SOLANO TRANSPORTATION AUTHORITY
1 HARBOR CENTER
SUITE 130
SUISUN CITY, CA 94585

PRELIMINARY PLANS SUBJECT TO REVISION

TEMPORARY TRAFFIC CONTROL DEVICE QUANTITIES

SHEET No.	STAGE	STATION LIMITS FROM		TO		TEMPORARY RAILING (TYPE K)	PORTABLE DELINEATOR	TEMPORARY CRASH CUSHION (TS11) (N)	TEMPORARY CRASH CUSHION MODULE	ALTERNATIVE TEMPORARY CRASH CUSHION	TEMPORARY PEDESTRIAN RAMP (WOOD) (N)	TYPE III BARRICADE	TEMPORARY CHAIN LINK FENCE (TYPE CL-6)	SUBGRADE ENHANCEMENT GEOTEXTILE (CLASS B2)	HOT MIX ASPHALT (TYPE A)	NOTES
						LF	EA	EA	EA	EA	EA	EA	LF	SQYD	TON	
SC-11	STAGE 3B	"F"	23+33	"F"	27+65		24									
SC-11		"F"	27+69									6				
SC-11		"F"	23+30	"F"	41+79		140									
SC-12		"F"	29+21	"F"	33+94		40									
SC-12		"F"	35+01	"F"	35+38		4									
SC-12		"F"	37+35	"F"	40+24		24									
SC-12		"F"	41+79	"F"	42+09		6									
SC-12		"F"	41+79	"FS"	76+30		37									
SC-16	STAGE 3C	"F8"	482+47	"F8"	481+86	80										
SC-16		"FS"	81+75	"FN"	67+11	80										
SC-16		"FN"	67+15	GATEWAY DRIVE			94									
SC-17		GATEWAY DRIVE					52									
SC-17		GATEWAY DRIVE										3				
SC-18	STAGE 4	"F"	22+67					1	11							
SC-18		"F"	22+67	"F"	29+51	680										
SC-18		"F"	22+67	"F"	29+66	700										
SC-19		"F"	29+51							1						
SC-19		"F"	29+66									4				
SC-19		"F"	30+36									3				
SC-19		"F"	30+42							1						
SC-19		"F"	30+42	"F"	34+99	460										
SC-19		"F"	30+51							1						
SC-19		"F"	30+51	"F"	34+95	460										
SC-19		"F"	34+95							1						
SC-19		"F"	34+99									2				
SC-19		"F"	35+44							1						
SC-19		"F"	35+44	"F"	38+21	280										
SC-19		"F"	38+21							1						
SC-19		"F"	35+40	"F"	38+12	260				1						
SC-19		"F"	38+12							1						
SC-19		"F"	35+27									3				
SC-19		"F"	38+31									4				
SC-19		"F"	39+10	"F"	41+68	260										
SC-19		"F"	41+68							1						
SC-19		"F"	39+19							1						
SC-19		"F"	39+19	"F"	41+98	280										
SC-19		"F"	39+07									2				
SC-19		"F"	41+86									3				
SC-19		"FN"	60+04									4				
SUBTOTAL SCQ-3						3,540	421	1	11	10	0	34		0	0	

STAGE CONSTRUCTION QUANTITIES
SCQ-3

RALEIGH LANGSTON	R.L.	REVISED BY	
CARL GIBSON III	02/15/22	DATE REVISED	
CALCULATED-DESIGNED BY	CHECKED BY		
CARL GIBSON III	CONSULTANT FUNCTIONAL SUPERVISOR		

STATE OF CALIFORNIA - DEPARTMENT OF TRANSPORTATION

Caltrans

X:\SR 37_FAIRGROUNDS DRIVE\000_CAD\Sheets\023-Stg_Cont\MC-Quantities\044A4414mc003.dgn

LAST REVISION 00-00-00 | DATE PLOTTED => 9/2/2022 | TIME PLOTTED => 12:42:03 PM

Dist	COUNTY	ROUTE	POST MILES TOTAL PROJECT	SHEET No.	TOTAL SHEETS
04	Sol	37	10.9		

REGISTERED CIVIL ENGINEER DATE

PLANS APPROVAL DATE

REGISTERED PROFESSIONAL ENGINEER No. Exp. CIVIL STATE OF CALIFORNIA

THE STATE OF CALIFORNIA OR ITS OFFICERS OR AGENTS SHALL NOT BE RESPONSIBLE FOR THE ACCURACY OR COMPLETENESS OF SCANNED COPIES OF THIS PLAN SHEET.

WMH CORPORATION
11070 WHITE ROCK RD
SUITE 140
RANCHO CORDOVA
CA 95670

SOLANO TRANSPORTATION AUTHORITY
1 HARBOR CENTER
SUITE 130
SUISUN CITY, CA 94585

PRELIMINARY PLANS SUBJECT TO REVISION

TEMPORARY TRAFFIC CONTROL DEVICE QUANTITIES

SHEET No.	STAGE	STATION LIMITS xxx FROM		TO		TEMPORARY RAILING (TYPE K)	PORTABLE DELINEATOR	TEMPORARY CRASH CUSHION (TS11) (N)	TEMPORARY CRASH CUSHION MODULE	ALTERNATIVE TEMPORARY CRASH CUSHION	TEMPORARY PEDESTRIAN RAMP (WOOD) (N)	TYPE III BARRICADE	TEMPORARY CHAIN LINK FENCE (TYPE CL-6)	SUBGRADE ENHANCEMENT GEOTEXTILE (CLASS B2)	HOT MIX ASPHALT (TYPE A)	NOTES
						LF	EA	EA	EA	EA	EA	EA	LF	SQYD	TON	
SC-19	STAGE 4	"FS"	75+02	"FS"	77+87	280										
SC-19		"FN"	60+36							1						
SC-19		"FN"	60+36	"FN"	62+76	240										
SC-20		"FS"	77+87							1						
SC-20		"FN"	62+76							1						
SC-20		"FN"	63+00									4				
SC-20		"FN"	64+06							1						
SC-20		"FN"	64+06	"FN"	65+69	160										
SC-20		"FN"	65+69							1						
SC-20		"FS"	78+99							1						
SC-20		"FS"	78+99	"FS"	80+83	180										
SC-20		"FS"	80+83							1						
SC-20		"FN"	67+16							1						
SC-20		"FN"	67+16	"FS"	88+38	640										
SC-20		"FS"	88+38							1						
SC-20		"FS"	82+07							1						
SC-20		"FS"	82+07	"FN"	69+26	200										
SC-20		"FN"	70+39							1						
SC-20		"FN"	70+39	"FN"	73+54	320										
SC-23	STAGE 5	"FN"	62+03	"FS"	78+46		34					2				
SC-23		"FS"	78+02	"FN"	63+38		24					2				
SC-23		"FS"	79+06	"FN"	63+95		6					1				
SC-23		"FN"	65+87	"FN"	67+53		17					1				
SC-23		"FS"	80+60	"FS"	82+42		16									
SC-23		"F8"	482+63	"F8"	480+45		47					3				
SC-23		"FA1"	173+09	"F5"	374+20		28					2				
SUBTOTAL SCQ-4						2,020	172	0	0	11	0	15		0	0	
SUBTOTAL SCQ-3						3,540	421	1	11	10	0	34		0	0	
SUBTOTAL SCQ-2						2,620	485	0	0	9	2	8		0	0	
SUBTOTAL SCQ-1						5,320	126	4	44	10	0	4		363	386	
GRAND TOTAL						13,500	1,204	5	55	40	2	61		363	386	

STAGE CONSTRUCTION QUANTITIES
SCQ-4

REVISED BY	R.L.	RALEIGH LANGSTON	CALCULATED-DESIGNED BY
DATE REVISED	02/15/22	CARL GIBSON III	CHECKED BY
		CARL GIBSON III	CONSULTANT FUNCTIONAL SUPERVISOR

STATE OF CALIFORNIA - DEPARTMENT OF TRANSPORTATION

Caltrans

X:\SR 37_FAIRGROUNDS DRIVE\000_CAD\Sheets\023-Stg_Cont\MC-Quantities\044A4414mc004.dgn

LAST REVISION 00-00-00 | DATE PLOTTED => 9/2/2022 | TIME PLOTTED => 12:42:05 PM

Dist	COUNTY	ROUTE	POST MILES TOTAL PROJECT	SHEET No.	TOTAL SHEETS
04	Sol	37	10.9		

REGISTERED CIVIL ENGINEER DATE

PLANS APPROVAL DATE

REGISTERED PROFESSIONAL ENGINEER No. Exp. CIVIL STATE OF CALIFORNIA

THE STATE OF CALIFORNIA OR ITS OFFICERS OR AGENTS SHALL NOT BE RESPONSIBLE FOR THE ACCURACY OR COMPLETENESS OF SCANNED COPIES OF THIS PLAN SHEET.

WMH CORPORATION
11070 WHITE ROCK RD
SUITE 140
RANCHO CORDOVA
CA 95670

SOLANO TRANSPORTATION AUTHORITY
1 HARBOR CENTER
SUITE 130
SUISUN CITY, CA 94585

PRELIMINARY PLANS SUBJECT TO REVISION

CONSTRUCTION AREA SIGNS (STATIONARY MOUNTED) TRAFFIC HANDLING SHEETS

STAGE	SIGN CODE FEDERAL	SIGN CODE CALIFORNIA	SIGN MESSAGE	DESCRIPTION	No. OF SIGNS (N)
STAGE 1	W20-1		ROAD WORK AHEAD		3
		C40	TRAFFIC FINES DOUBLED IN CONSTRUCTION ZONES		3
	G20-5aP		WORK ZONE	MOUNT ABOVE R2-1 (25)	5
	R2-1 (25)		SPEED LIMIT 25 MPH	MOUNT BELOW G20-5aP	5
	W11-1		BICYCLE WARNING	MOUNT ABOVE W16-1P	15
	W16-1P		SHARE THE ROAD	MOUNT BELOW W11-1	15
	M4-9B		PEDESTRIAN DETOUR		2
	M4-9B (R)		PEDESTRIAN DETOUR (RIGHT)		5
	R1-1		STOP		1
		C23	RAMP WORK AHEAD		2
		C12	NARROW LANES		2
	R2-11		END HIGHER FINES ZONE	MOUNT ABOVE G20-2	1
	G20-2		END ROAD WORK		3
		R13A	NO RIGHT TURN ON RED		1
STAGE 2		R13A	NO RIGHT TURN ON RED		1
	W11-1		BICYCLE WARNING	MOUNT ABOVE W16-1P	1
	W16-1P		SHARE THE ROAD	MOUNT BELOW W11-1	1
STAGE 3A		C20 (R)	2 RIGHT LANES CLOSED AHEAD		1
	W4-2R		LANE ENDS (RIGHT)		1
	W4-2L		LANE ENDS (LEFT)		1
	W1-4L		REVERSE CURVE (LEFT)	MOUNT ABOVE W13-1P (25)	1
	W1-4R		REVERSE CURVE (RIGHT)	MOUNT ABOVE W13-1P (25)	1
	W13-1P (25)		ADVISORY SPEED (25)	MOUNT BELOW W1-4R AND W1-4L	2
	R3-5 (R)		RIGHT TURN ONLY		1
		C20 (L)	2 LEFT LANES CLOSED AHEAD		1
STAGE 3B		C20 (R)	2 RIGHT LANES CLOSED AHEAD		1
	W4-2R		LANE ENDS (RIGHT)		1
	W4-2L		LANE ENDS (LEFT)		1
	W1-4L		REVERSE CURVE (LEFT)	MOUNT ABOVE W13-1P (25)	1
	W1-4R		REVERSE CURVE (RIGHT)	MOUNT ABOVE W13-1P (25)	1
	W13-1P (25)		ADVISORY SPEED (25)	MOUNT BELOW W1-4R AND W1-4L	2
	R3-5 (R)		RIGHT TURN ONLY		1
		C20 (L)	2 LEFT LANES CLOSED AHEAD		1
STAGE 3C	W20-1		ROAD WORK AHEAD		1
		C40	TRAFFIC FINES DOUBLED IN CONSTRUCTION ZONES		1
	G20-5aP		WORK ZONE	MOUNT ABOVE R2-1 (25)	1
	R2-1 (25)		SPEED LIMIT 25 MPH	MOUNT BELOW G20-5aP	1
	R2-11		END HIGHER FINES ZONE	MOUNT ABOVE G20-2	1
	G20-2		END ROAD WORK	MOUNT BELOW R2-11	1
		C20 (R)	2 RIGHT LANES CLOSED AHEAD		1
		C20 (L)	2 LEFT LANES CLOSED AHEAD	MOUNT ABOVE W16-1P	1
	W16-1P		SHARE THE ROAD	MOUNT BELOW C20 (L)	1
	W4-2R		LANE ENDS (RIGHT)		1
	W4-2L		LANE ENDS (LEFT)		1
	W1-4R		REVERSE CURVE (RIGHT)	MOUNT ABOVE W13-1P (25)	1
	W13-1P (25)		ADVISORY SPEED (25)	MOUNT BELOW W1-4R	1
	R3-5 (R)		RIGHT TURN ONLY		1
STAGE 5	W11-1		BICYCLE WARNING	MOUNT ABOVE W16-1P	2
	W16-1P		SHARE THE ROAD	MOUNT BELOW W11-1	2
	W23-2		NEW TRAFFIC PATTERN AHEAD		4
TOTAL					106

STAGE CONSTRUCTION QUANTITIES
SCQ-5

REVISED BY	R.L.	RALEIGH LANGSTON	
DATE REVISED	02/15/22	CARL GIBSON III	
CALCULATED-DESIGNED BY		CHECKED BY	
CONSULTANT FUNCTIONAL SUPERVISOR	CARL GIBSON III		

STATE OF CALIFORNIA - DEPARTMENT OF TRANSPORTATION

Caltrans

X:\SR 37_FAIRGROUNDS DRIVE\000_CAD\Sheets\023-Stg_Cont\MC-Quantities\044A4414mc005.dgn

LAST REVISION 00-00-00 | DATE PLOTTED => 9/2/2022 | TIME PLOTTED => 12:42:09 PM

Dist	COUNTY	ROUTE	POST MILES TOTAL PROJECT	SHEET No.	TOTAL SHEETS
04	Sol	37	10.9		

REGISTERED CIVIL ENGINEER DATE

PLANS APPROVAL DATE

REGISTERED PROFESSIONAL ENGINEER No. Exp. CIVIL STATE OF CALIFORNIA

THE STATE OF CALIFORNIA OR ITS OFFICERS OR AGENTS SHALL NOT BE RESPONSIBLE FOR THE ACCURACY OR COMPLETENESS OF SCANNED COPIES OF THIS PLAN SHEET.

WMH CORPORATION
11070 WHITE ROCK RD
SUITE 140
RANCHO CORDOVA
CA 95670

SOLANO TRANSPORTATION AUTHORITY
1 HARBOR CENTER
SUITE 130
SUISUN CITY, CA 94585

PRELIMINARY PLANS SUBJECT TO REVISION

TEMPORARY PAVEMENT DELINEATION QUANTITIES

SHEET No.	STAGE No.	STATION LIMITS					DETAIL No.	TEMPORARY PAVEMENT MARKING (PAINT) 6" WHITE BROKEN (6-1)	6" WHITE BROKEN (8-4)	6" WHITE BROKEN (12-3)	6" WHITE BROKEN (17-7)	6" WHITE SOLID	6" YELLOW SOLID	8" WHITE SOLID	12" WHITE SOLID	TEMPORARY PAVEMENT MARKING (PAINT) TYPE II	TYPE III	TYPE VII	TYPE VIII	RETROREFLECTIVE PAVEMENT MARKER TYPE C	TYPE D	TYPE G	REMOVE PAVEMENT MARKER	REMOVE THERMOPLASTIC TRAFFIC STRIPE WHITE	YELLOW
																				EA				LF	
SC-2		"F"	20+25	TO	"F"	29+49	24						924												
SC-2		"F"	20+25	TO	"F"	29+49	9				918											21			
SC-2		"F"	20+25	TO	"F"	29+49	27B					918													
SC-2		"F"	28+00	TO	"F"	29+49	DIAG.					216													
SC-2		"F"	20+25	TO	"F"	29+49																	21	1,916	924
SC-3		"F"	29+49	TO	"F"	29+66	LL								72										
SC-3		"F"	29+66	TO	"F"	30+37	40	145																	
SC-3		"F"	29+66	TO	"F"	30+37	27C			74															
SC-3		"F"	30+37	TO	"F"	40+22	24						985												
SC-3		"F"	30+37	TO	"F"	41+92	9				1,161											26			
SC-3		"F"	30+37	TO	"F"	41+98	27B					1,167													
SC-3		"F"	40+96	TO	"F"	41+92	24						96												
SC-3		"F"	41+19	TO	"F"	41+92	38A							73											
SC-3		"F"	41+92	TO	"F"	41+92	LL								35										
SC-3		"F"	30+37	TO	"F"	41+92																	26	2,436	1,081
SC-3		"F"	41+92	TO	"FN"	60+00	40	146																	
SC-3		"F"	41+92	TO	"FN"	60+00	27C			59															
SC-3		"F"	42+24	TO	"F"	42+35	38A							113											
SC-3		"F"	42+35	TO	"F"	42+51	LL								15										
SC-3		"F"	42+39																36						
SC-3	STAGE 1	"FN"	60+00	TO	"FN"	60+06	LL								152										
SC-4		"FN"	60+06	TO	"FN"	62+87	24						276												
SC-4		"FN"	60+06	TO	"FN"	62+87	9				276											7			
SC-4		"FN"	60+06	TO	"FA3"	184+00	27B					866													
SC-4		"FN"	62+87	TO	"FN"	62+87	LL								24										
SC-4		"FN"	62+43	TO	"FN"	62+87	27B					43													
SC-4		"FN"	62+94	TO	"FA3"	177+90	38A							49											
SC-4		"FN"	62+82	TO	"FA3"	177+91	27B					43													
SC-4		"F7"	370+32	TO	"F7"	370+65	24						49												
SC-4		"FN"	62+87	TO	"FS"	78+91	40	207																	
SC-4		"FN"	62+87	TO	"FN"	63+22	27C			41															
SC-4		"F6"	474+00	TO	"FS"	76+91	27B					292													
SC-4		"F6"	474+19	TO	"F6"	475+18	38B							101						6					
SC-4		"F6"	474+19	TO	"F6"	475+07	24						92												
SC-4		"FA2"	275+95																36						
SC-4		"FA2"	275+95														42								
SC-4		"FS"	76+91	TO	"FS"	79+82	38A							181											
SC-4		"FS"	76+91	TO	"FS"	81+05	22					215									10				
SC-4		"FS"	80+28	TO	"FS"	81+05	38A							76											
SC-4		"FS"	76+91	TO	"FS"	81+05	9				214											6			
SUBTOTAL SCQ-6								498	0	174	2,569	3,760	2,422	593	298	0	42	0	72	6	10	60	47	4,352	2,005

STAGE CONSTRUCTION QUANTITIES
SCQ-6

STATE OF CALIFORNIA - DEPARTMENT OF TRANSPORTATION

Caltrans

CARL GIBSON III — CONSULTANT FUNCTIONAL SUPERVISOR

CARL GIBSON III — CHECKED BY

RALEIGH LANGSTON — CALCULATED-DESIGNED BY

REVISED BY R.L. — DATE REVISED 02/15/22

X:\SR 37_FAIRGROUNDS DRIVE\000_CAD\Sheets\023-Stg_Cont\MC-Quantities\044A4414mc006.dgn

LAST REVISION 00-00-00 — DATE PLOTTED => 9/2/2022 — TIME PLOTTED => 12:42:12 PM

Dist	COUNTY	ROUTE	POST MILES TOTAL PROJECT	SHEET No.	TOTAL SHEETS
04	Sol	37	10.9		

REGISTERED CIVIL ENGINEER DATE

PLANS APPROVAL DATE

REGISTERED PROFESSIONAL ENGINEER No. Exp. CIVIL STATE OF CALIFORNIA

THE STATE OF CALIFORNIA OR ITS OFFICERS OR AGENTS SHALL NOT BE RESPONSIBLE FOR THE ACCURACY OR COMPLETENESS OF SCANNED COPIES OF THIS PLAN SHEET.

WMH CORPORATION
11070 WHITE ROCK RD
SUITE 140
RANCHO CORDOVA
CA 95670

SOLANO TRANSPORTATION AUTHORITY
1 HARBOR CENTER
SUITE 130
SUISUN CITY, CA 94585

PRELIMINARY PLANS SUBJECT TO REVISION

TEMPORARY PAVEMENT DELINEATION QUANTITIES

SHEET No.	STAGE No.	STATION LIMITS					DETAIL No.	TEMPORARY PAVEMENT MARKING (PAINT) 6" WHITE BROKEN (6-1)	6" WHITE BROKEN (8-4)	6" WHITE BROKEN (12-3)	6" WHITE BROKEN (17-7)	6" WHITE SOLID	6" YELLOW SOLID	8" WHITE SOLID	12" WHITE SOLID	TEMPORARY PAVEMENT MARKING (PAINT) TYPE II	TYPE III	TYPE VII	TYPE VIII	RETROREFLECTIVE PAVEMENT MARKER TYPE C	TYPE D	TYPE G	REMOVE PAVEMENT MARKER	REMOVE THERMOPLASTIC TRAFFIC STRIPE WHITE	YELLOW
																				EA				LF	
SC-4	STAGE 1	"FN"	63+22	TO	"FS"	81+05	27B					283													
SC-4		"FS"	76+91				LL								23										
SC-4		"FS"	81+05				LL								35										
SC-4		"FS"	79+34														84								
SC-4		"FS"	80+78														42								
SC-4		"FN"	62+87	TO	"FS"	81+05																29	1,946	141	
SC-4		"FS"	81+05	TO	"FS"	82+17	40	228																	
SC-4		"FS"	81+05	TO	"FS"	82+17	27C			99															
SC-4		"FA4"	277+42	TO	"FA4"	275+48	24						228												
SC-4		"FA4"	277+42	TO	"FA4"	275+48	38A							468											
SC-4		"FA4"	277+42	TO	"FA4"	275+48	27B					236													
SC-4		"FA4"	275+48	TO	"FA4"	275+58	LL								34										
SC-4		"FA4"	275+53														84								
SC-4		"FA4"	275+53													45									
SC-4		"FS"	82+17	TO	"FN"	73+12	24						569												
SC-4		"FS"	82+17	TO	"FN"	73+12	9				569											13			
SC-4		"FS"	82+17	TO	"FN"	73+12	27B					569													
SC-4		"FS"	81+05	TO	"FN"	73+12																	13	2,332	797
SC-6	STAGE 2	"F"	29+27	TO	"F"	29+45	LL								284										
SC-6		"F"	29+27	TO	"F"	29+45																		284	
SC-6		"F"	41+82	TO	"FN"	60+10	LL								388										
SC-6		"FN"	60+10	TO	"FN"	62+79	24						272												
SC-6		"FN"	60+10	TO	"FN"	62+79	9				272											7			
SC-6		"FN"	60+10	TO	"FN"	62+08	39					382													
SC-6		"FN"	62+08	TO	"FN"	62+42	39A		82																
SC-6		"FN"	62+42	TO	"FN"	62+79	39					78													
SC-6		"FN"	62+79				LL								29										
SC-6		"FN"	62+08	TO	"F7"	370+98	24						92												
SC-6		"FN"	62+42	TO	"FN"	62+79	27B					76													
SC-6		"FA3"	177+61	TO	"FA3"	177+77	38A							34											
SC-6		"FA3"	177+52	TO	"FA3"	180+86	24						352												
SC-6		"FN"	62+79	TO	"FN"	63+09	LL								68										
SC-6		"FS"	77+54	TO	"FS"	79+36	40	1,264																	
SC-6		"FN"	63+09	TO	"FS"	78+94	39A		208																
SC-6		"F6"	474+20	TO	"FS"	77+54	27B					193													
SC-6		"F6"	474+20	TO	"F6"	474+86	38A							66											
SC-6		"F6"	474+86	TO	"F6"	475+71	24						86												
SC-6		"F6"	474+86	TO	"F6"	475+71	27B					100													
SC-6		"F6"	475+71				LL								11										
SC-6		"F6"	474+20	TO	"F6"	475+34	24						125												
SUBTOTAL SCQ-7								1,492	290	99	841	1,917	1,724	568	872	45	210	0	0	0	0	20	42	4,562	938

STAGE CONSTRUCTION QUANTITIES
SCQ-7

STATE OF CALIFORNIA - DEPARTMENT OF TRANSPORTATION

Caltrans

CONSULTANT FUNCTIONAL SUPERVISOR: CARL GIBSON III

CALCULATED-DESIGNED BY: RALEIGH LANGSTON | CHECKED BY: CARL GIBSON III

REVISED BY: R.L. | DATE REVISED: 02/15/22

X:\SR 37_FAIRGROUNDS DRIVE\000_CAD\Sheets\023-Stg_Cont\MC-Quantities\044A4414mc007.dgn

LAST REVISION 00-00-00 | DATE PLOTTED => 9/2/2022 | TIME PLOTTED => 12:42:14 PM

Dist	COUNTY	ROUTE	POST MILES TOTAL PROJECT	SHEET No.	TOTAL SHEETS
04	Sol	37	10.9		

REGISTERED CIVIL ENGINEER DATE

PLANS APPROVAL DATE

REGISTERED PROFESSIONAL ENGINEER No. Exp. CIVIL STATE OF CALIFORNIA

THE STATE OF CALIFORNIA OR ITS OFFICERS OR AGENTS SHALL NOT BE RESPONSIBLE FOR THE ACCURACY OR COMPLETENESS OF SCANNED COPIES OF THIS PLAN SHEET.

WMH CORPORATION
11070 WHITE ROCK RD
SUITE 140
RANCHO CORDOVA
CA 95670

SOLANO TRANSPORTATION AUTHORITY
1 HARBOR CENTER
SUITE 130
SUISUN CITY, CA 94585

PRELIMINARY PLANS SUBJECT TO REVISION

TEMPORARY PAVEMENT DELINEATION QUANTITIES

SHEET No.	STAGE No.	STATION LIMITS					DETAIL No.	TEMPORARY PAVEMENT MARKING (PAINT) 6" WHITE BROKEN (6-1)	6" WHITE BROKEN (8-4)	6" WHITE BROKEN (12-3)	6" WHITE BROKEN (17-7)	6" WHITE SOLID	6" YELLOW SOLID	8" WHITE SOLID	12" WHITE SOLID	TEMPORARY PAVEMENT MARKING (PAINT) TYPE II	TYPE III	TYPE VII	TYPE VIII	RETROREFLECTIVE PAVEMENT MARKER TYPE C	TYPE D	TYPE G	REMOVE PAVEMENT MARKER	REMOVE THERMOPLASTIC TRAFFIC STRIPE WHITE	YELLOW
																				EA				LF	
SC-6	STAGE 2	"F6"	474+86	TO	"F6"	475+34	27B					64													
SC-6		"F6"	475+34				LL								18										
SC-6		"F6"	474+20	TO	"F6"	475+34	24						125												
SC-6		"FN"	63+86	TO	"FA1"	173+49	27B					280													
SC-6		"FN"	63+97	TO	"FN"	66+11	9				214											6			
SC-6		"FN"	63+97	TO	"FN"	66+11	38A							291											
SC-6		"FN"	64+08	TO	"FN"	65+99	22					190									9				
SC-6		"FN"	63+94	TO	"FN"	64+07	LL								46										
SC-6		"FN"	64+40														84								
SC-6		"FN"	63+86	TO	"FN"	66+11																	15	708	
SC-6		"FS"	80+30	TO	"FS"	80+93	38A							64											
SC-6		"FS"	79+36	TO	"FS"	80+93	9				156											5			
SC-6		"FS"	78+94	TO	"FS"	80+93	39					402													
SC-6		"FS"	80+93				LL								40										
SC-6		"FA1"	173+49	TO	"FN"	67+56	27C																		
SC-6		"FN"	65+64	TO	"FN"	67+56	40	912																	
SC-6		"FS"	80+93	TO	"FS"	82+17	39A		229																
SC-6		"FA1"	173+49	TO	"FA1"	171+71	24						179												
SC-6		"FN"	67+56				LL								23										
SC-6		"FA1"	172+03	TO	"FS"	85+63	27B					422													
SC-6		"FN"	67+56	TO	"FS"	85+63	9				305											8			
SC-6		"FN"	67+56	TO	"FS"	85+63	24						305												
SC-6		"FA1"	173+49	TO	"FS"	85+63																	13	1,048	305
SC-6		"FS"	80+93	TO	"FS"	81+63	LL								122										
SC-6		"FA4"	275+48	TO	"FA4"	277+41	24						221												
SC-6		"FA4"	275+51	TO	"FA4"	277+41	38A							493											
SC-6		"FA4"	275+51	TO	"FA4"	277+41	27B					216													
SC-6		"FA4"	275+67														84	27							
SC-9	STAGE 3A	"FN"	60+04	TO	"FN"	62+76	24						280												
SC-9		"FN"	60+04	TO	"FN"	62+76	9				274											7			
SC-9		"FN"	60+04	TO	"FN"	60+86	39A		156																
SC-9		"FN"	60+04	TO	"FN"	60+86	27B					79													
SC-10		"FN"	60+86	TO	"FN"	62+76	39					394													
SC-10		"FN"	62+76				LL								28										
SC-10		"F7"	370+28	TO	"F7"	370+34	LL								55										
SC-10		"F7"	370+61	TO	"F7"	370+93	27B					53													
SC-10		"F7"	370+64	TO	"F7"	371+17	38A							81											
SC-10		"F7"	370+67	TO	"F7"	371+17	24						89												
SC-10		"FN"	62+55	TO	"FN"	63+02	LL								86										
SC-10		"F6"	474+19	TO	"FS"	77+54	27B					203													
SUBTOTAL SCQ-8								912	385	0	949	2,303	1,199	929	418	0	168	27	0	0	9	26	28	1,756	305

STAGE CONSTRUCTION QUANTITIES
SCQ-8

STATE OF CALIFORNIA - DEPARTMENT OF TRANSPORTATION

Caltrans

CARL GIBSON III — CONSULTANT FUNCTIONAL SUPERVISOR

CALCULATED-DESIGNED BY: RALEIGH LANGSTON — CHECKED BY: CARL GIBSON III

REVISED BY: R.L. — DATE REVISED: 02/15/22

X:\SR 37_FAIRGROUNDS DRIVE\000_CAD\Sheets\023-Stg_Cont\MC-Quantities\044A4414mc008.dgn

LAST REVISION 00-00-00 — DATE PLOTTED => 9/2/2022 — TIME PLOTTED => 12:42:16 PM

Dist	COUNTY	ROUTE	POST MILES TOTAL PROJECT	SHEET No.	TOTAL SHEETS
04	Sol	37	10.9		

REGISTERED CIVIL ENGINEER DATE

PLANS APPROVAL DATE

REGISTERED PROFESSIONAL ENGINEER No. Exp. CIVIL STATE OF CALIFORNIA

THE STATE OF CALIFORNIA OR ITS OFFICERS OR AGENTS SHALL NOT BE RESPONSIBLE FOR THE ACCURACY OR COMPLETENESS OF SCANNED COPIES OF THIS PLAN SHEET.

WMH CORPORATION
11070 WHITE ROCK RD
SUITE 140
RANCHO CORDOVA
CA 95670

SOLANO TRANSPORTATION AUTHORITY
1 HARBOR CENTER
SUITE 130
SUISUN CITY, CA 94585

PRELIMINARY PLANS SUBJECT TO REVISION

TEMPORARY PAVEMENT DELINEATION QUANTITIES

SHEET No.	STAGE No.	STATION LIMITS					DETAIL No.	TEMPORARY PAVEMENT MARKING (PAINT) 6" WHITE BROKEN (6-1)	6" WHITE BROKEN (8-4)	6" WHITE BROKEN (12-3)	6" WHITE BROKEN (17-7)	6" WHITE SOLID	6" YELLOW SOLID	8" WHITE SOLID	12" WHITE SOLID	TEMPORARY PAVEMENT MARKING (PAINT) TYPE II	TYPE III	TYPE VII	TYPE VIII	RETROREFLECTIVE PAVEMENT MARKER TYPE C	TYPE D	TYPE G	REMOVE PAVEMENT MARKER	REMOVE THERMOPLASTIC TRAFFIC STRIPE WHITE	YELLOW
																				EA				LF	
SC-10	STAGE 3A	"F6"	474+19	TO	"F6"	475+22	38A							100											
SC-10		"F6"	474+19	TO	"F6"	475+22	24						100												
SC-10		"F6"	475+22				LL								25										
SC-10		"FS"	77+54	TO	"FS"	79+31	40	1,514																	
SC-10		"FN"	62+76	TO	"FN"	63+55	39A		134																
SC-10		"FN"	64+00				LL								38										
SC-10		"FN"	64+00	TO	"FN"	65+64	27B					165													
SC-10		"FN"	64+00	TO	"FN"	65+64	9				167											5			
SC-10		"FN"	64+00	TO	"FN"	65+64	38A							167											
SC-10		"FN"	64+00	TO	"FN"	65+85	24						184												
SC-10		"FS"	79+06	TO	"FS"	81+14	24						204												
SC-10		"FS"	79+31	TO	"FS"	81+14	9				233											6			
SC-10		"FS"	78+80	TO	"FS"	81+14	39					241													
SC-10		"FS"	81+14				LL								25										
SC-10		"FN"	65+64	TO	"FS"	82+17	40	1,266																	
SC-10		"FN"	65+64	TO	"FN"	67+09	27C			149															
SC-10		"FS"	81+14	TO	"FS"	82+17	27C			103															
SC-10		"FS"	81+14	TO	"F8"	481+92	LL								90										
SC-10		"FA4"	277+41	TO	"FA4"	275+48	24						219												
SC-10		"FA4"	277+41	TO	"FA4"	275+53	38A							447											
SC-10		"FA4"	277+41	TO	"FA4"	275+60	27B					229													
SC-10		"FN"	67+09				LL								23										
SC-10		"FN"	67+09	TO	"F5"	373+17	27B					68													
SC-10		"F5"	373+17	TO	"F5"	373+67	27C			45															
SC-10		"F5"	373+67	TO	"FS"	87+50	27B					426													
SC-10		"FN"	67+09	TO	"FS"	87+50	9				538											13			
SC-10		"FN"	67+09	TO	"FS"	87+50	24						537												
SC-10		"FN"	67+09	TO	"FS"	87+50																	13	1,077	537
SC-14	STAGE 3C	"F"	20+26	TO	"F"	29+67	24						944												
SC-14		"F"	20+26	TO	"F"	29+67	9				943											21			
SC-14		"F"	20+26	TO	"F"	29+67	39					1,327													
SC-14		"F"	21+89	TO	"F"	29+50	27B					766													
SC-14		"F"	21+89	TO	"F"	29+50	9				761											17			
SC-14		"F"	21+89	TO	"F"	29+50	24						761												
SC-15		"F"	29+67				LL								59										
SC-15		"F"	29+67	TO	"F"	30+34	40	135																	
SC-15		"F"	29+67	TO	"F"	30+34	39A		135																
SC-15		"F"	30+38	TO	"F"	35+02	27B					451													
SC-15		"F"	30+38	TO	"F"	35+02	9				454											11			
SC-15		"F"	30+38	TO	"F"	33+07	38A							266											
SUBTOTAL SCQ-9								2,915	269	297	3,096	3,673	2,949	980	260	0	0	0	0	0	0	73	13	1,077	537

STAGE CONSTRUCTION QUANTITIES
SCQ-9

REVISED BY	DATE REVISED
R.L.	02/15/22

RALEIGH LANGSTON — CARL GIBSON III

CALCULATED-DESIGNED BY — CHECKED BY

CARL GIBSON III — CONSULTANT FUNCTIONAL SUPERVISOR

STATE OF CALIFORNIA - DEPARTMENT OF TRANSPORTATION

Caltrans

X:\SR 37_FAIRGROUNDS DRIVE\000_CAD\Sheets\023-Stg_Cont\MC-Quantities\044A4414mc009.dgn

LAST REVISION 00-00-00 | DATE PLOTTED => 9/2/2022 | TIME PLOTTED => 12:42:18 PM

Dist	COUNTY	ROUTE	POST MILES TOTAL PROJECT	SHEET No.	TOTAL SHEETS
04	Sol	37	10.9		

REGISTERED CIVIL ENGINEER DATE

PLANS APPROVAL DATE

REGISTERED PROFESSIONAL ENGINEER No. Exp. CIVIL STATE OF CALIFORNIA

THE STATE OF CALIFORNIA OR ITS OFFICERS OR AGENTS SHALL NOT BE RESPONSIBLE FOR THE ACCURACY OR COMPLETENESS OF SCANNED COPIES OF THIS PLAN SHEET.

WMH CORPORATION
11070 WHITE ROCK RD
SUITE 140
RANCHO CORDOVA
CA 95670

SOLANO TRANSPORTATION AUTHORITY
1 HARBOR CENTER
SUITE 130
SUISUN CITY, CA 94585

PRELIMINARY PLANS SUBJECT TO REVISION

TEMPORARY PAVEMENT DELINEATION QUANTITIES

SHEET No.	STAGE No.	STATION LIMITS					DETAIL No.	TEMPORARY PAVEMENT MARKING (PAINT) 6" WHITE BROKEN (6-1)	6" WHITE BROKEN (8-4)	6" WHITE BROKEN (12-3)	6" WHITE BROKEN (17-7)	6" WHITE SOLID	6" YELLOW SOLID	8" WHITE SOLID	12" WHITE SOLID	TEMPORARY PAVEMENT MARKING (PAINT) TYPE II	TYPE III	TYPE VII	TYPE VIII	RETROREFLECTIVE PAVEMENT MARKER TYPE C	TYPE D	TYPE G	REMOVE PAVEMENT MARKER	REMOVE THERMOPLASTIC TRAFFIC STRIPE WHITE	YELLOW
																				EA				LF	
SC-15		"F"	30+38	TO	"F"	35+09	24						467												
SC-15		"F"	35+41	TO	"F"	37+24	27B					176													
SC-15		"F"	35+27	TO	"F"	38+04	9				276											7			
SC-15		"F"	35+27	TO	"F"	38+16	24						284												
SC-15		"F"	39+10	TO	"F"	41+80	27B					270													
SC-15		"F"	39+10	TO	"F"	41+80	9				270											7			
SC-15		"F"	39+10	TO	"F"	39+80	38A							69											
SC-15		"F"	39+06	TO	"F"	41+80	24						277												
SC-15		"F"	21+89	TO	"F"	41+80																	42	4,088	1,663
SC-15		"F"	30+34	TO	"F"	35+09	24						466												
SC-15		"F"	30+34	TO	"F"	41+98	9				1,178											26			
SC-15		"F"	30+34	TO	"F"	41+98	39					1,481													
SC-15		"F"	34+23	TO	"F"	35+09	38A							87											
SC-15		"F"	35+45	TO	"F"	38+19	24						277												
SC-15		"F"	39+23	TO	"F"	41+98	24						276												
SC-15		"F"	40+67	TO	"F"	41+98	38A							132											
SC-15	STAGE 3C	"F"	41+98				LL								40										
SC-15		"F"	20+26	TO	"F"	41+98																	47	5,188	1,963
SC-16		"FS"	75+04	TO	"F6"	474+93	27B					382													
SC-16		"FS"	75+04	TO	"FS"	77+99	9				294											8			
SC-16		"FS"	75+04	TO	"FS"	76+37	38A							134											
SC-16		"FS"	75+04	TO	"FS"	77+99	24						300												
SC-16		"FS"	75+04	TO	"FS"	77+99																	8	810	300
SC-16		"FN"	61+87	TO	"FN"	62+77	24						94												
SC-16		"FN"	61+56	TO	"FN"	62+77	39					254													
SC-16		"FN"	62+77				LL								17										
SC-16		"FN"	51+87	TO	"F7"	370+26	24						39												
SC-16		"FN"	62+77	TO	"FS"	79+49	40	606																	
SC-16		"FN"	62+77	TO	"FS"	79+49	39A		328																
SC-16		"FS"	79+49	TO	"FS"	80+83	24						132												
SC-16		"FS"	79+49	TO	"FS"	80+83	39					272													
SC-16		"FS"	80+83				LL								17										
SC-16		"FN"	65+64	TO	"FN"	67+15	40	615																	
SC-20		"FN"	61+87	TO	"FN"	62+76	24						100												
SC-20		"FN"	61+87	TO	"FN"	62+76	9				100											4			
SC-20		"FN"	61+87	TO	"FN"	62+76	39					200													
SC-20	STAGE 4	"FN"	62+76				LL								28										
SC-20		"FS"	79+53	TO	"FS"	81+10	24						155												
SC-20		"FS"	79+80	TO	"FS"	81+10	9				233											6			
SC-20		"FS"	79+76	TO	"FS"	81+10	39																		
SUBTOTAL SCQ-10								1,221	328	0	2,351	3,035	2,867	422	102	0	0	0	0	0	0	58	97	10,086	3,926

STAGE CONSTRUCTION QUANTITIES
SCQ-10

STATE OF CALIFORNIA - DEPARTMENT OF TRANSPORTATION

Caltrans

CONSULTANT FUNCTIONAL SUPERVISOR: CARL GIBSON III

CALCULATED-DESIGNED BY: RALEIGH LANGSTON — REVISED BY: R.L.

CHECKED BY: CARL GIBSON III — DATE REVISED: 02/15/22

X:\SR 37_FAIRGROUNDS DRIVE\000_CAD\Sheets\023-Stg_Cont\MC-Quantities\044A4414mc010.dgn

LAST REVISION 00-00-00 — DATE PLOTTED => 9/2/2022 — TIME PLOTTED => 12:42:21 PM

Dist	COUNTY	ROUTE	POST MILES TOTAL PROJECT	SHEET No.	TOTAL SHEETS
04	Sol	37	10.9		

REGISTERED CIVIL ENGINEER DATE

PLANS APPROVAL DATE

REGISTERED PROFESSIONAL ENGINEER No. Exp. CIVIL STATE OF CALIFORNIA

THE STATE OF CALIFORNIA OR ITS OFFICERS OR AGENTS SHALL NOT BE RESPONSIBLE FOR THE ACCURACY OR COMPLETENESS OF SCANNED COPIES OF THIS PLAN SHEET.

WMH CORPORATION
11070 WHITE ROCK RD
SUITE 140
RANCHO CORDOVA
CA 95670

SOLANO TRANSPORTATION AUTHORITY
1 HARBOR CENTER
SUITE 130
SUISUN CITY, CA 94585

PRELIMINARY PLANS SUBJECT TO REVISION

TEMPORARY PAVEMENT DELINEATION QUANTITIES

SHEET No.	STAGE No.	STATION LIMITS					DETAIL No.	TEMPORARY PAVEMENT MARKING (PAINT) 6" WHITE BROKEN (6-1)	6" WHITE BROKEN (8-4)	6" WHITE BROKEN (12-3)	6" WHITE BROKEN (17-7)	6" WHITE SOLID	6" YELLOW SOLID	8" WHITE SOLID	12" WHITE SOLID	TEMPORARY PAVEMENT MARKING (PAINT) TYPE II	TYPE III	TYPE VII	TYPE VIII	RETROREFLECTIVE PAVEMENT MARKER TYPE C	TYPE D	TYPE G	REMOVE PAVEMENT MARKER	REMOVE THERMOPLASTIC TRAFFIC STRIPE WHITE	YELLOW
																				EA				LF	
SC-20		"FS"	81+10				LL								34										
SC-20		"FN"	65+64	TO	"FN"	67+20	40	1,060																	
SC-20		"FS"	81+10	TO	"FS"	81+83	39A		132																
SC-20		"FN"	67+20				LL								23										
SC-20		"FN"	67+20	TO	"F5"	373+09	27B					51													
SC-20		"F5"	373+09	TO	"F5"	373+67	27C			55															
SC-20	STAGE 4	"F5"	373+67	TO	"FS"	88+79	27B					555													
SC-20		"FN"	67+20	TO	"FS"	88+79	9				659											15			
SC-20		"FN"	67+20	TO	"FS"	88+79	24						659												
SC-20		"FS"	87+50	TO	"FS"	88+79																	4	258	129
SC-20		"FS"	81+94	TO	"FN"	73+54	24						640												
SC-20		"FS"	81+94	TO	"FN"	73+54	9				685											16			
SC-20		"FS"	81+83	TO	"FN"	73+54	39					927													
SUBTOTAL SCQ-11								1,060	132	55	1,344	1,533	1,299	0	57	0	0	0	0	0	0	31	4	258	129
SUBTOTAL SCQ-10								1,221	328	0	2,351	3,035	2,867	422	102	0	0	0	0	0	0	58	97	10,086	3,926
SUBTOTAL SCQ-9								2,915	269	297	3,096	3,673	2,949	980	260	0	0	0	0	0	0	73	13	1,077	537
SUBTOTAL SCQ-8								912	385	0	949	2,303	1,199	929	418	0	168	27	0	0	9	26	28	1,756	305
SUBTOTAL SCQ-7								1,492	290	99	841	1,917	1,724	568	872	45	210	0	0	0	0	20	42	4,562	938
SUBTOTAL SCQ-6								498	0	174	2,569	3,760	2,422	593	298	0	42	0	72	6	10	60	47	4,352	2,005
TOTAL								8,098	1,404	625	11,150	16,221	12,460	3,492	2,007	45	420	27	72	6	19	268	231	22,091	7,840

STAGE CONSTRUCTION QUANTITIES
SCQ-11

REVISED BY	DATE REVISED	CALCULATED-DESIGNED BY	CHECKED BY	CONSULTANT FUNCTIONAL SUPERVISOR
R.L.	02/15/22	RALEIGH LANGSTON	CARL GIBSON III	CARL GIBSON III

STATE OF CALIFORNIA - DEPARTMENT OF TRANSPORTATION

Caltrans

X:\SR 37_FAIRGROUNDS DRIVE\000_CAD\Sheets\023-Stg_Const\MC-Quantities\044A4414mc011.dgn

LAST REVISION 00-00-00 | DATE PLOTTED => 9/2/2022 | TIME PLOTTED => 12:42:23 PM

Dist	COUNTY	ROUTE	POST MILES TOTAL PROJECT	SHEET No.	TOTAL SHEETS
04	Sol	37	10.9		

REGISTERED CIVIL ENGINEER DATE

PLANS APPROVAL DATE

REGISTERED PROFESSIONAL ENGINEER No. Exp. CIVIL STATE OF CALIFORNIA

THE STATE OF CALIFORNIA OR ITS OFFICERS OR AGENTS SHALL NOT BE RESPONSIBLE FOR THE ACCURACY OR COMPLETENESS OF SCANNED COPIES OF THIS PLAN SHEET.

WMH CORPORATION
11070 WHITE ROCK RD
SUITE 140
RANCHO CORDOVA
CA 95670

SOLANO TRANSPORTATION AUTHORITY
1 HARBOR CENTER
SUITE 130
SUISUN CITY, CA 94585

PRELIMINARY PLANS SUBJECT TO REVISION

NOTE:

FOR ACCURATE RIGHT OF WAY DATA, CONTACT RIGHT OF WAY ENGINEERING AT THE DISTRICT OFFICE.

LEGEND:

- 12" LIMIT LINE
- TYPE I ARROW (24')
- TYPE I ARROW (10')
- TYPE II ARROW (LEFT)
- TYPE II ARROW (RIGHT)
- TYPE III ARROW (LEFT)
- TYPE III ARROW (RIGHT)
- TYPE III ARROW (BOTH)
- TYPE IV ARROW (LEFT)
- TYPE IV ARROW (RIGHT)
- TYPE VI ARROW (LEFT)
- TYPE VII ARROW (LEFT)
- TYPE VII ARROW (RIGHT)
- BIKE LANE MARKING Mod
- SHARED ROAD BICYCLE MARKING
- GREEN BIKE LANE PAVEMENT MARKING
- No. PAVEMENT DELINEATION DETAIL
- CHANGE OF TRAFFIC STRIPE DETAIL
- BEGIN/END OF TRAFFIC STRIPE DETAIL
- OBJECT MARKER (TYPE P)
- DELINEATOR (CLASS 1) TYPE F

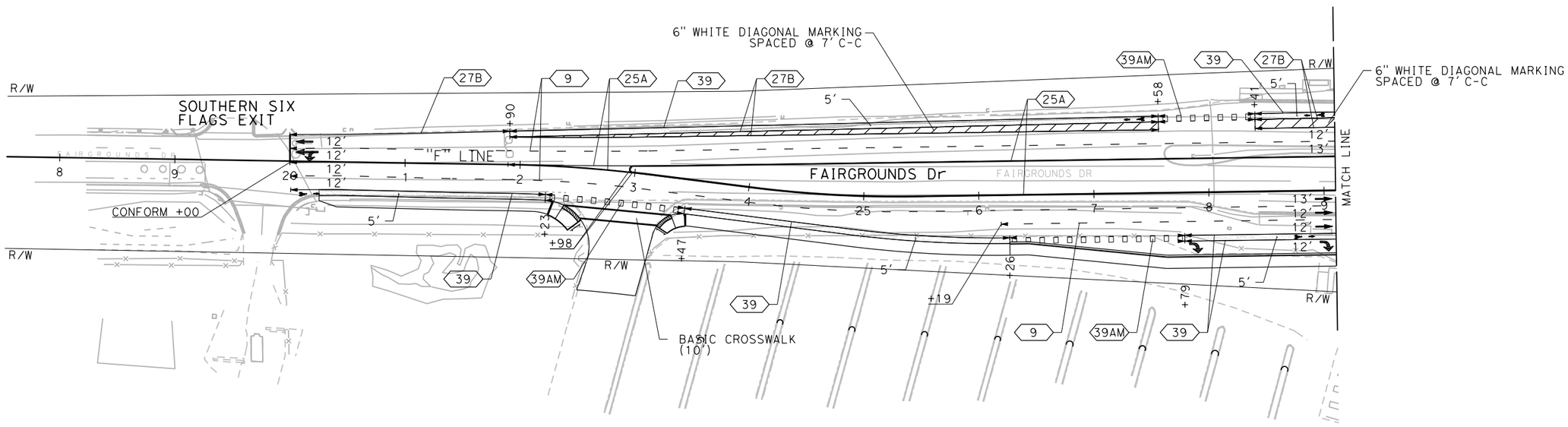

PAVEMENT DELINEATION PLAN

SCALE: 1" = 50'

PD-1

APPROVED FOR PAVEMENT DELINEATION WORK ONLY

REVISED BY	DATE REVISED
R.L.	02/15/22

CALCULATED-DESIGNED BY: RALEIGH LANGSTON
CHECKED BY: CARL GIBSON III
SUPERVISOR: CARL GIBSON III
CONSULTANT FUNCTIONAL SUPERVISOR

STATE OF CALIFORNIA - DEPARTMENT OF TRANSPORTATION
Caltrans

X:\SR 37_FAIRGROUNDS DRIVE\000_CAD\Sheets\026-Pave_Delin\NA-Plans\044A4414na001.dgn

LAST REVISION 00-00-00
DATE PLOTTED => 9/2/2022
TIME PLOTTED => 11:19:07 PM

Dist	COUNTY	ROUTE	POST MILES TOTAL PROJECT	SHEET No.	TOTAL SHEETS
04	Sol	37	10.9		

REGISTERED CIVIL ENGINEER DATE

PLANS APPROVAL DATE

REGISTERED PROFESSIONAL ENGINEER No. Exp. CIVIL STATE OF CALIFORNIA

THE STATE OF CALIFORNIA OR ITS OFFICERS OR AGENTS SHALL NOT BE RESPONSIBLE FOR THE ACCURACY OR COMPLETENESS OF SCANNED COPIES OF THIS PLAN SHEET.

WMH CORPORATION
11070 WHITE ROCK RD
SUITE 140
RANCHO CORDOVA
CA 95670

SOLANO TRANSPORTATION AUTHORITY
1 HARBOR CENTER
SUITE 130
SUISUN CITY, CA 94585

PRELIMINARY PLANS SUBJECT TO REVISION

NOTE:

FOR ACCURATE RIGHT OF WAY DATA, CONTACT RIGHT OF WAY ENGINEERING AT THE DISTRICT OFFICE.

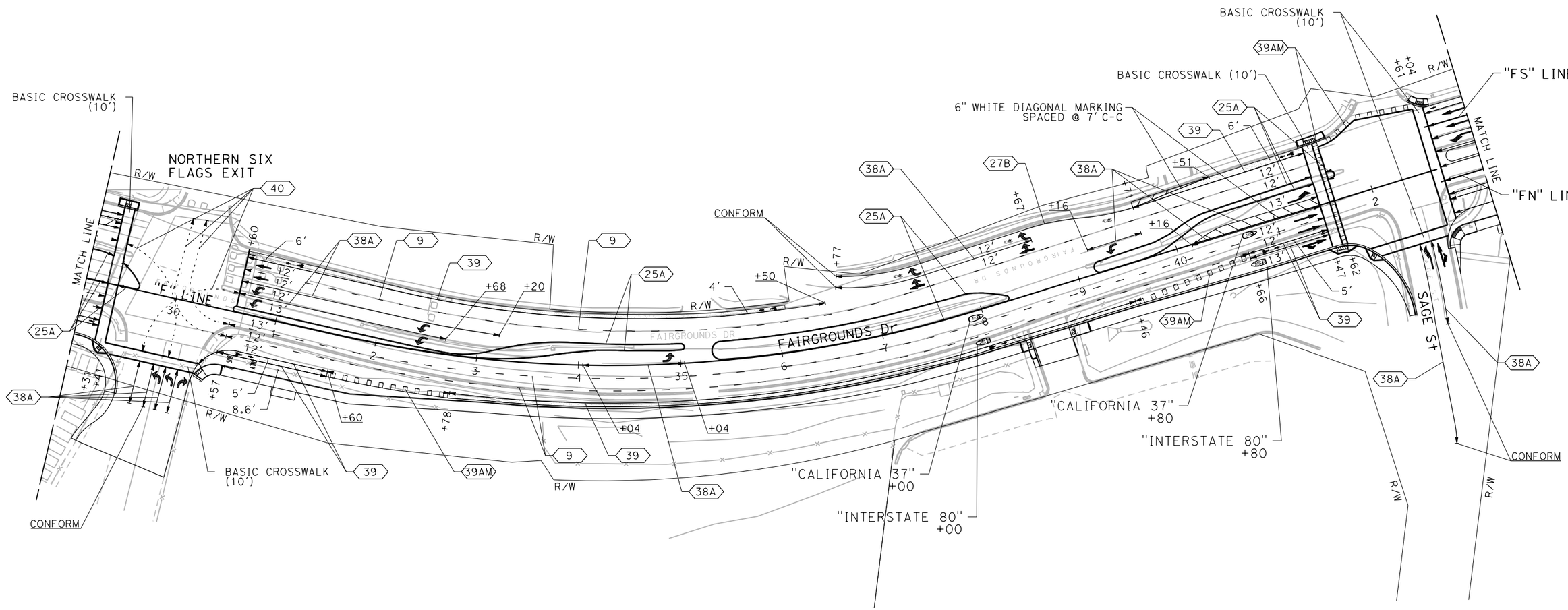

FOR LEGEND, SEE SHEET PD-1

APPROVED FOR PAVEMENT DELINEATION WORK ONLY

PAVEMENT DELINEATION PLAN

SCALE: 1" = 50'

PD-2

STATE OF CALIFORNIA - DEPARTMENT OF TRANSPORTATION

Caltrans

CALCULATED-DESIGNED BY RALEIGH LANGSTON | CHECKED BY CARL GIBSON III

REVISED BY R.L. | DATE REVISED 02/15/22

CONSULTANT FUNCTIONAL SUPERVISOR CARL GIBSON III

X:\SR 37_FAIRGROUNDS DRIVE\000_CAD\Sheets\026-Pave_Delin\NA-Plans\044A4414na002.dgn

LAST REVISION 00-00-00 | DATE PLOTTED => 9/2/2022 | TIME PLOTTED => 1:19:21 PM

Dist	COUNTY	ROUTE	POST MILES TOTAL PROJECT	SHEET No.	TOTAL SHEETS
04	Sol	37	10.9		

REGISTERED CIVIL ENGINEER DATE

PLANS APPROVAL DATE

REGISTERED PROFESSIONAL ENGINEER No. Exp. CIVIL STATE OF CALIFORNIA

THE STATE OF CALIFORNIA OR ITS OFFICERS OR AGENTS SHALL NOT BE RESPONSIBLE FOR THE ACCURACY OR COMPLETENESS OF SCANNED COPIES OF THIS PLAN SHEET.

WMH CORPORATION
11070 WHITE ROCK RD
SUITE 140
RANCHO CORDOVA
CA 95670

SOLANO TRANSPORTATION AUTHORITY
1 HARBOR CENTER
SUITE 130
SUISUN CITY, CA 94585

PRELIMINARY PLANS SUBJECT TO REVISION

NOTE:

FOR ACCURATE RIGHT OF WAY DATA, CONTACT RIGHT OF WAY ENGINEERING AT THE DISTRICT OFFICE.

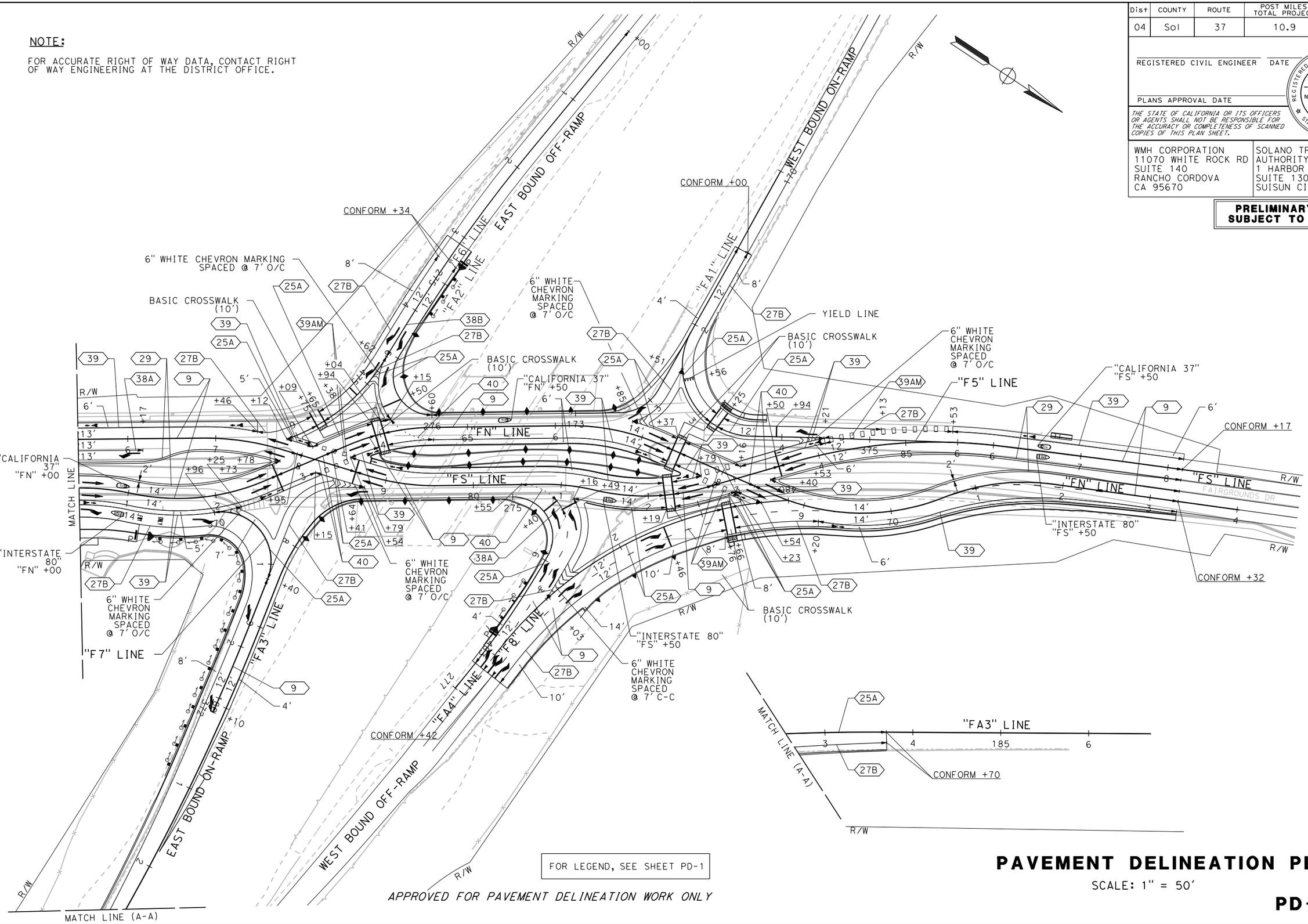

FOR LEGEND, SEE SHEET PD-1

APPROVED FOR PAVEMENT DELINEATION WORK ONLY

PAVEMENT DELINEATION PLAN

SCALE: 1" = 50'

PD-3

CALCULATED-DESIGNED BY	RALEIGH LANGSTON	REVISED BY	R.L.
CHECKED BY	CARL GIBSON III	DATE REVISED	02/15/22
CONSULTANT FUNCTIONAL SUPERVISOR	CARL GIBSON III		

STATE OF CALIFORNIA - DEPARTMENT OF TRANSPORTATION

Caltrans

X:\SR 37_FAIRGROUNDS DRIVE\000_CAD\Sheets\026-Pave_Delin\MA-Plans\044A4414na003.dgn

LAST REVISION 00-00-00 | DATE PLOTTED => 9/2/2022 | TIME PLOTTED => 1:19:26 PM

Dist	COUNTY	ROUTE	POST MILES TOTAL PROJECT	SHEET No.	TOTAL SHEETS
04	Sol	37	10.9	274	

REGISTERED CIVIL ENGINEER DATE

PLANS APPROVAL DATE

REGISTERED PROFESSIONAL ENGINEER No. Exp. CIVIL STATE OF CALIFORNIA

THE STATE OF CALIFORNIA OR ITS OFFICERS OR AGENTS SHALL NOT BE RESPONSIBLE FOR THE ACCURACY OR COMPLETENESS OF SCANNED COPIES OF THIS PLAN SHEET.

WMH CORPORATION
11070 WHITE ROCK RD
SUITE 140
RANCHO CORDOVA
CA 95670

SOLANO TRANSPORATION AUTHORITY
1 HARBOR CENTER
SUITE 130
SUISUN CITY, CA 94585

PRELIMINARY PLANS SUBJECT TO REVISION

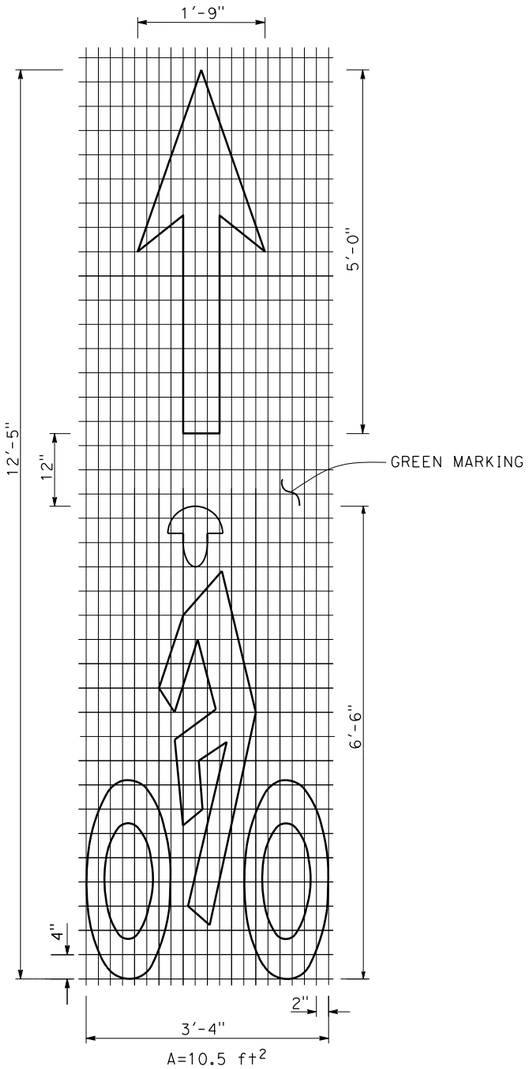

BIKE LANE MARKING Mod

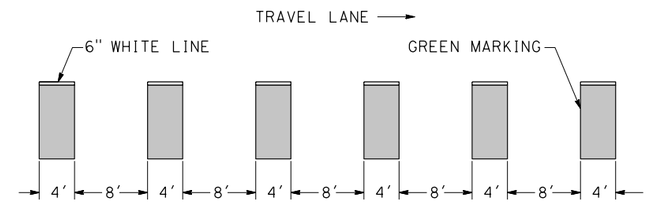

39AM
GREEN BIKE LANE

PAVEMENT DELINEATION DETAILS

NO SCALE

PDD- 1

R.L.	02/15/22
REVISED BY	DATE REVISED
RALEIGH LANGSTON	CARL GIBSON III
CALCULATED-DESIGNED BY	CHECKED BY
CARL GIBSON III	
CONSULTANT FUNCTIONAL SUPERVISOR	

STATE OF CALIFORNIA - DEPARTMENT OF TRANSPORTATION

Caltrans

X:\SR 37_FAIRGROUNDS DRIVE\000_CAD\Sheets\026-Pave_Delin\NB-Details\044A4414nb001.dgn

LAST REVISION 00-00-00 | DATE PLOTTED => 2/8/2022 | TIME PLOTTED => 12:38:49 PM

BORDER LAST REVISED 7/2/2010 | USERNAME => jvaldivia | DGN FILE => 044A4414nb001.dgn | RELATIVE BORDER SCALE IS IN INCHES 0 1 2 3 | UNIT 0738 | PROJECT NUMBER & PHASE 04000205841

Dist	COUNTY	ROUTE	POST MILES TOTAL PROJECT	SHEET No.	TOTAL SHEETS
04	Sol	37	10.9	782	

REGISTERED CIVIL ENGINEER DATE

PLANS APPROVAL DATE

REGISTERED PROFESSIONAL ENGINEER No. Exp. CIVIL STATE OF CALIFORNIA

THE STATE OF CALIFORNIA OR ITS OFFICERS OR AGENTS SHALL NOT BE RESPONSIBLE FOR THE ACCURACY OR COMPLETENESS OF SCANNED COPIES OF THIS PLAN SHEET.

WMH CORPORATION
11070 WHITE ROCK RD
SUITE 140
RANCHO CORDOVA
CA 95670

SOLANO TRANSPORATION AUTHORITY
1 HARBOR CENTER
SUITE 130
SUISUN CITY, CA 94585

PRELIMINARY PLANS SUBJECT TO REVISION

PAVEMENT DELINEATION QUANTITIES

SHEET No.	LOCATION/STATION					DIRECTION	DETAIL No.	THERMOPLASTIC TRAFFIC STRIPE (ENHANCED WET NIGHT VISIBILITY) 6" WHITE SOLID	6" YELLOW SOLID	6" WHITE BROKEN 17-7	6" WHITE BROKEN 8-4	6" WHITE BROKEN 6-1	8" WHITE SOLID	12" WHITE SOLID	PAVEMENT MARKER TYPE C	PAVEMENT MARKER TYPE D	PAVEMENT MARKER TYPE RY	PAVEMENT MARKER TYPE G	OBJECT MARKER TYPE P	DELINEATOR (CLASS 1) TYPE F	THERMOPLASTIC PAVEMENT MARKINGS (ENHANCED WET NIGHT VISIBILITY) WHITE	GREEN	DESCRIPTION
								LF							EA					SQFT		
PD-1	"F"	20+00	TO	"F"	21+90	Lt	27B	190															
	"F"	20+00	TO	"F"	29+31	Lt	9			931								21					
	"F"	21+90	TO	"F"	27+58	Lt	27B	1,136															
	"F"	21+90	TO	"F"	27+58	Lt															353		6" DIAGONAL MARKINGS
	"F"	28+41	TO	"F"	29+31	Lt	27B	178															
	"F"	28+41	TO	"F"	29+31	Lt															115		6" DIAGONAL MARKINGS
	"F"	20+00	TO	"F"	29+31	Lt	25A		931								40						
	"F"	20+05				Lt															14		TYPE I ARROW (10′)
	"F"	20+05				Lt															27		TYPE VII ARROW (LEFT)
	"F"	21+90	TO	"F"	27+58	Lt	39	568														2,818	GREEN BIKE LANE MARKING
	"F"	27+27				Lt															11		BIKE LANE MARKING Mod
	"F"	27+58	TO	"F"	28+41	Lt	39AM				85											140	GREEN BIKE LANE MARKING
	"F"	28+41	TO	"F"	29+31	Lt	39	89														454	GREEN BIKE LANE MARKING
	"F"	28+84				Lt															11		BIKE LANE MARKING Mod
	"F"	21+90	TO	"F"	29+31		25A		741								32						
	"F"	20+00	TO	"F"	29+31	Rt	9			931								21					
	"F"	26+19	TO	"F"	29+31	Rt	9			312								8					
	"F"	20+00	TO	"F"	22+23	Rt	39	223														984	GREEN BIKE LANE MARKING
	"F"	20+25				Rt															11		BIKE LANE MARKING Mod
	"F"	22+23	TO	"F"	23+47	Rt	39AM				124											200	GREEN BIKE LANE MARKING
	"F"	22+39	TO	"F"	23+38	Rt	LL							161									
	"F"	23+47	TO	"F"	26+26	Rt	39	279														1,422	GREEN BIKE LANE MARKING
	"F"	26+26	TO	"F"	27+79	Rt	39AM				153											260	GREEN BIKE LANE MARKING
	"F"	27+79	TO	"F"	29+31	Rt	39	152														766	GREEN BIKE LANE MARKING
	"F"	27+90				Rt															15		TYPE IV ARROW (RIGHT)
	"F"	29+04				Rt															15		TYPE IV ARROW (RIGHT)
	"F"	29+04				Rt															11		BIKE LANE MARKING Mod
	"F"	29+07				Rt															14		TYPE 1 ARROW (10′)
	"F"	29+07				Rt															14		TYPE 1 ARROW (10′)
	"F"	29+07				Rt															14		TYPE 1 ARROW (10′)
PD-2	"F"	29+41	TO	"F"	29+63	Lt	25A		53								4						
	"F"	29+31	TO	"F"	29+41	Lt	LL							105									
	"F"	29+31	TO	"F"	29+41	Rt	LL							115									
	"F"	29+41	TO	"F"	30+05	Lt	40					132											
	"F"	29+79	TO	"F"	30+60	Rt	40					127											
	"F"	29+98	TO	"F"	30+56	Lt	40					148											
	"F"	30+13	TO	"F"	30+56	Lt	40					126											
	"F"	29+41	TO	"F"	30+39	Rt	LL							182									
	FAIRGROUNDS ENTRANCE					Rt	38A						43										
	FAIRGROUNDS ENTRANCE					Rt	38A						43										
	FAIRGROUNDS ENTRANCE					Rt	38A						44										
	FAIRGROUNDS ENTRANCE					Rt	38A						44										
SUBTOTAL OF PDQ-1								2,815	1,725	2,174	362	533	174	563			76	50			625	7,044	

PAVEMENT DELINEATION QUANTITIES
PDQ-1

REVISED BY	DATE REVISED
R.L.	02/15/22

RALEIGH LANGSTON — CARL GIBSON III

CALCULATED-DESIGNED BY — CHECKED BY

CONSULTANT FUNCTIONAL SUPERVISOR — CARL GIBSON III

STATE OF CALIFORNIA - DEPARTMENT OF TRANSPORTATION

Caltrans

X:\SR 37_FAIRGROUNDS DRIVE\000_CAD\Sheets\026-Pave_Delin\NC-Quantities\044A4414nc001.dgn

LAST REVISION 00-00-00 | DATE PLOTTED => 2/9/2022 TIME PLOTTED => 5:27:36 PM

Dist	COUNTY	ROUTE	POST MILES TOTAL PROJECT	SHEET No.	TOTAL SHEETS
04	Sol	37	10.9	782	

REGISTERED CIVIL ENGINEER DATE

PLANS APPROVAL DATE

REGISTERED PROFESSIONAL ENGINEER No. Exp. CIVIL STATE OF CALIFORNIA

THE STATE OF CALIFORNIA OR ITS OFFICERS OR AGENTS SHALL NOT BE RESPONSIBLE FOR THE ACCURACY OR COMPLETENESS OF SCANNED COPIES OF THIS PLAN SHEET.

WMH CORPORATION
11070 WHITE ROCK RD
SUITE 140
RANCHO CORDOVA
CA 95670

SOLANO TRANSPORATION AUTHORITY
1 HARBOR CENTER
SUITE 130
SUISUN CITY, CA 94585

PRELIMINARY PLANS SUBJECT TO REVISION

PAVEMENT DELINEATION QUANTITIES

SHEET No.	LOCATION/STATION	DIRECTION	DETAIL No.	THERMOPLASTIC TRAFFIC STRIPE (ENHANCED WET NIGHT VISIBILITY) 6" WHITE SOLID	6" YELLOW SOLID	6" WHITE BROKEN 17-7	6" WHITE BROKEN 8-4	6" WHITE BROKEN 6-1	8" WHITE SOLID	12" WHITE SOLID	PAVEMENT MARKER TYPE C	PAVEMENT MARKER TYPE D	PAVEMENT MARKER TYPE RY	PAVEMENT MARKER TYPE G	OBJECT MARKER TYPE P	DELINEATOR (CLASS 1) TYPE F	THERMOPLASTIC PAVEMENT MARKINGS (ENHANCED WET NIGHT VISIBILITY) WHITE	GREEN	DESCRIPTION
				LF							EA						SQFT		
	FAIRGROUNDS ENTRANCE	R+															15		TYPE IV ARROW (LEFT)
	FAIRGROUNDS ENTRANCE	R+															15		TYPE IV ARROW (LEFT)
	FAIRGROUNDS ENTRANCE	R+															15		TYPE IV ARROW (RIGHT)
	"F" 30+60 TO "F" 30+60	L+	LL							58									
	"F" 30+60 TO "F" 36+50	L+	39	572														2,352	GREEN BIKE LANE MARKING
	"F" 30+69	L+															11		BIKE LANE MARKING Mod
	"F" 35+83	L+															11		BIKE LANE MARKING Mod
	"F" 30+69	L+															14		TYPE I ARROW (10')
	"F" 30+69	L+															14		TYPE I ARROW (10')
	"F" 30+69	L+															15		TYPE IV ARROW (RIGHT)
	"F" 30+69	L+															15		TYPE IV ARROW (RIGHT)
	"F" 30+60 TO "F" 41+47	L+	9			1,070								24					
	"F" 30+60 TO "F" 33+20	L+	38A						258										
	"F" 30+60 TO "F" 32+68	L+	38A						207										
	"F" 30+57 TO "F" 35+04	L+	25A		902								39						
	"F" 34+04 TO "F" 35+04	L+	38A						100										
	"F" 34+91	R+															15		TYPE IV ARROW (LEFT)
	"F" 30+57 TO "F" 41+47	R+	9			1,098								24					
	"F" 30+57 TO "F" 40+66	R+	9			1,024								23					
	"F" 30+35 TO "F" 31+60	R+	39	133														516	GREEN BIKE LANE MARKING
	"F" 30+57 TO "F" 31+60	R+	39	110															
	"F" 30+86	R+															11		BIKE LANE MARKING Mod
	"F" 30+62	R+															42		"BUS ONLY"
	"F" 31+60 TO "F" 32+78	R+	39AM				118											200	GREEN BIKE LANE MARKING
	"F" 32+78 TO "F" 39+77	R+	39	716														2,603	GREEN BIKE LANE MARKING
PD-2	"F" 37+23	L+															11.5		SHARED ROADWAY BYCICLE MARKING
	"F" 38+26	L+															11.5		SHARED ROADWAY BYCICLE MARKING
	"F" 39+38	L+															11.5		SHARED ROADWAY BYCICLE MARKING
	"F" 38+14	R+															11		BIKE LANE MARKING Mod
	"F" 39+77 TO "F" 40+66	R+	39AM				91											140	GREEN BIKE LANE MARKING
	"F" 40+66 TO "F" 41+47	R+	39	81														402	GREEN BIKE LANE MARKING
	"F" 40+66 TO "F" 41+47	R+	39	81															
	"F" 41+42	R+															42		TYPE III ARROW (LEFT)
	"F" 41+42	R+															31		TYPE 1 ARROW (24')
	"F" 41+42	R+															31		TYPE 1 ARROW (24')
	"F" 41+42	R+															11		BIKE LANE MARKING Mod
	"F" 41+42	R+															45		TYPE II ARROW (RIGHT)
	"F" 41+62		39AM															177	GREEN BIKE LANE MARKING
	"F" 41+62 TO "F" 42+61	L+	39AM															160	GREEN BIKE LANE MARKING
	"F" 36+65 TO "F" 40+51	L+	27B	381															
	"F" 36+65 TO "F" 38+67	L+	38A						199										
	"F" 37+44	L+															15		TYPE IV ARROW (RIGHT)
	"F" 37+44	L+															27		TYPE VII ARROW (RIGHT)
	"F" 38+00																	90	"CALIFORNIA 37" SHIELD
	"F" 38+00																90		"INTERSTATE 80" SHIELD
	"F" 38+26	L+															15		TYPE IV ARROW (RIGHT)
	"F" 38+26	L+															27		TYPE VII ARROW (RIGHT)
	"F" 35+31 TO "F" 38+30	L+	25A		608								27						
	"F" 39+16 TO "F" 39+71	L+	38A						55										
SUBTOTAL OF PDQ-2				2,074	1,510	3,192	209		819	58			66	71			573	6,640	

PAVEMENT DELINEATION QUANTITIES
PDQ-2

REVISED BY	DATE REVISED	CALCULATED-DESIGNED BY	CHECKED BY	CONSULTANT FUNCTIONAL SUPERVISOR
R.L.	02/15/22	RALEIGH LANGSTON	CARL GIBSON III	CARL GIBSON III

STATE OF CALIFORNIA - DEPARTMENT OF TRANSPORTATION

X:\SR 37_FAIRGROUNDS DRIVE\000_CAD\Sheets\026-Pave_Delin\NC-Quantities\044A4414nc002.dgn

LAST REVISION 00-00-00 | DATE PLOTTED => 2/9/2022 | TIME PLOTTED => 5:27:40 PM

Dist	COUNTY	ROUTE	POST MILES TOTAL PROJECT	SHEET No.	TOTAL SHEETS
04	Sol	37	10.9	782	

REGISTERED CIVIL ENGINEER DATE

PLANS APPROVAL DATE

REGISTERED PROFESSIONAL ENGINEER No. Exp. CIVIL STATE OF CALIFORNIA

THE STATE OF CALIFORNIA OR ITS OFFICERS OR AGENTS SHALL NOT BE RESPONSIBLE FOR THE ACCURACY OR COMPLETENESS OF SCANNED COPIES OF THIS PLAN SHEET.

WMH CORPORATION
11070 WHITE ROCK RD
SUITE 140
RANCHO CORDOVA
CA 95670

SOLANO TRANSPORATION AUTHORITY
1 HARBOR CENTER
SUITE 130
SUISUN CITY, CA 94585

PRELIMINARY PLANS SUBJECT TO REVISION

PAVEMENT DELINEATION QUANTITIES

SHEET No.	LOCATION/STATION					DIRECTION	DETAIL No.	THERMOPLASTIC TRAFFIC STRIPE (ENHANCED WET NIGHT VISIBILITY) 6" WHITE SOLID	6" YELLOW SOLID	6" WHITE BROKEN 17-7	6" WHITE BROKEN 8-4	6" WHITE BROKEN 6-1	8" WHITE SOLID	12" WHITE SOLID	PAVEMENT MARKER TYPE C	PAVEMENT MARKER TYPE D	PAVEMENT MARKER TYPE RY	PAVEMENT MARKER TYPE G	OBJECT MARKER TYPE P	DELINEATOR (CLASS 1) TYPE F	THERMOPLASTIC PAVEMENT MARKINGS (ENHANCED WET NIGHT VISIBILITY) WHITE	GREEN	DESCRIPTION
								LF							EA						SQFT		
PD-2	"F"	39+38				L+															15		TYPE IV ARROW (LEFT)
	"F"	39+17	TO	"F"	41+47	L+	25A		471								21						
	"F"	39+71	TO	"F"	40+51	L+															39		6" DIAGONAL MARKINGS
	"F"	39+71	TO	"F"	41+47	L+	39	176														813	GREEN BIKE LANE MARKING
	"F"	40+80																				90	"CALIFORNIA 37" SHIELD
	"F"	40+80																			90		"INTERSTATE 80" SHIELD
	"F"	41+23				L+															11		BIKE LANE MARKING Mod
	"F"	41+47	TO	"F"	41+57	L+	LL							63									
	"F"	40+16	TO	"F"	41+47	L+	38A						133										
	"F"	40+16	TO	"F"	41+47	R+	38A						131										
	"F"	40+16	TO	"F"	40+47	L+															268		6" DIAGONAL MARKINGS
	"F"	41+47	TO	"F"	41+57	R+	LL							130									
	"F"	41+57	TO	"F"	41+65	L+	25A		21								2						
	"F"	41+82	TO	"F"	42+61	R+	LL							148									
	SAGE STREET					R+	38A						199										
	SAGE STREET					R+	38A						83										
	SAGE STREET					R+															42		TYPE III ARROW (LEFT)
	SAGE STREET					R+															45		TYPE II ARROW (RIGHT)
	"F"	42+61	TO	"FS"	75+04	R+	LL							245									
	"FS"	75+20																			11		BIKE LANE MARKING Mod
	"FS"	75+20																			31		TYPE I ARROW (24')
	"FS"	75+20																			31		TYPE I ARROW (24')
	"FS"	75+20																			42		TYPE III ARROW (LEFT)
PD-3	"FS"	75+04	TO	"FS"	77+46	L+	39	246														1,537	GREEN BIKE LANE MARKING
	"FS"	77+15				L+															11		BIKE LANE MARKING Mod
	"FS"	75+04	TO	"FS"	77+95		9			291								8					
	"FS"	75+04	TO	"FS"	76+17	R+	38A						113										
	"FS"	75+95				R+															42		TYPE III ARROW (LEFT)
	"FS"	75+04	TO	"FS"	77+78	R+	29		544							13							
	"FS"	77+58				L+															31		TYPE I ARROW (24')
	"FS"	77+58				R+															31		TYPE I ARROW (24')
	"FS"	77+79	TO	"FS"	78+09	L+	39	31														122	GREEN BIKE LANE MARKING
	"FS"	77+91				L+															11		BIKE LANE MARKING Mod
	"F6"	473+34	TO	"F6"	475+65	R+	27B		231														
	"F6"	470+00	TO	"F6"	474+62		38B						462		21								
	"F6"	473+34	TO	"FA2"	276+00	L+	25A		214								10						
	"F6"	474+83				R+															42		TYPE III ARROW (RIGHT)
	"F6"	474+83				L+															42		TYPE III ARROW (LEFT)
	"F6"	474+62	TO	"F6"	475+65		25A		103								6						
	"FA2"	276+04	TO	"FA2"	276+57	R+	27B	77															
	"F6"	474+62	TO	"F6"	474+97	L+															15		6" CHEVRON MARKINGS
	"F6"	474+91																			42		TYPE III ARROW (RIGHT)
	"F6"	475+38	TO	"F6"	475+75	R+	LL							53									
	"F6"	475+75	TO	"FS"	77+46	R+	27B	66															
SUBTOTAL OF PDQ-3								596	1,584	291			1,121	639	21	13	39	8			892	2,562	

R.L.	02/15/22
REVISED BY	DATE REVISED
RALEIGH LANGSTON	CARL GIBSON III
CALCULATED-DESIGNED BY	CHECKED BY
CARL GIBSON III	
CONSULTANT FUNCTIONAL SUPERVISOR	

STATE OF CALIFORNIA - DEPARTMENT OF TRANSPORTATION

Caltrans

X:\SR 37_FAIRGROUNDS DRIVE\000_CAD\Sheets\026-Pave_Delin\NC-Quantities\044A4414nc003.dgn

PAVEMENT DELINEATION QUANTITIES

PDQ-3

LAST REVISION 00-00-00 | DATE PLOTTED => 2/9/2022 TIME PLOTTED => 5:27:42 PM

Dist	COUNTY	ROUTE	POST MILES TOTAL PROJECT	SHEET No.	TOTAL SHEETS
04	Sol	37	10.9	782	

REGISTERED CIVIL ENGINEER DATE

PLANS APPROVAL DATE

REGISTERED PROFESSIONAL ENGINEER No. Exp. CIVIL STATE OF CALIFORNIA

THE STATE OF CALIFORNIA OR ITS OFFICERS OR AGENTS SHALL NOT BE RESPONSIBLE FOR THE ACCURACY OR COMPLETENESS OF SCANNED COPIES OF THIS PLAN SHEET.

WMH CORPORATION
11070 WHITE ROCK RD
SUITE 140
RANCHO CORDOVA
CA 95670

SOLANO TRANSPORATION AUTHORITY
1 HARBOR CENTER
SUITE 130
SUISUN CITY, CA 94585

PRELIMINARY PLANS SUBJECT TO REVISION

PAVEMENT DELINEATION QUANTITIES

SHEET No.	LOCATION/STATION					DIRECTION	DETAIL No.	THERMOPLASTIC TRAFFIC STRIPE (ENHANCED WET NIGHT VISIBILITY) 6" WHITE SOLID	6" YELLOW SOLID	6" WHITE BROKEN 17-7	6" WHITE BROKEN 8-4	6" WHITE BROKEN 6-1	8" WHITE SOLID	12" WHITE SOLID	PAVEMENT MARKER TYPE C	PAVEMENT MARKER TYPE D	PAVEMENT MARKER TYPE RY	PAVEMENT MARKER TYPE G	OBJECT MARKER TYPE P	DELINEATOR (CLASS 1) TYPE F	THERMOPLASTIC PAVEMENT MARKINGS (ENHANCED WET NIGHT VISIBILITY) WHITE	GREEN	DESCRIPTION
								LF							EA						SQFT		
	"F6"	475+75	TO	"F6"	476+12		25A		38								3						
	"FA2"	276+47				R+															42		TYPE III ARROW (LEFT)
	"FA2"	276+50				R+	LL							24									
	"FN"	60+04	TO	"FN"	62+83	L+	29		548							13							
	"FN"	60+04	TO	"FN"	62+58		9			270								7					
	"FN"	60+04	TO	"FN"	63+15	R+	39	317														1,602	GREEN BIKE LANE MARKING
	"FN"	60+04	TO	"FN"	62+25	R+	39	226															
	"FN"	60+04	TO	"FA3"	183+70	R+	27B	792															
	"FN"	60+71				L+															31		TYPE I ARROW (24′)
	"FN"	60+71				R+															31		TYPE I ARROW (24′)
	"FN"	60+71				R+															11		BIKE LANE MARKING Mod
	"FN"	60+71				R+															42		TYPE III ARROW (RIGHT)
	"FN"	61+00																				90	"CALIFORNIA 37" SHIELD
	"FN"	61+00																			90		"INTERSTATE 80" SHIELD
	"FN"	61+15				R+															38		"FWY ONLY"
	"FN"	61+89				R+															42		TYPE III ARROW (RIGHT)
	"FN"	61+96	TO	"F7"	371+17		25A		118								6						
	"FN"	61+96	TO	"FN"	62+25	R+															12		6" CHEVRON MARKINGS
	"FN"	62+63				L+															31		TYPE I ARROW (24′)
	"FN"	62+63				R+															31		TYPE I ARROW (24′)
	"FN"	62+60				R+															11		BIKE LANE MARKING Mod
	"FN"	62+73					LL							28									
PD-3	"F7"	371+17	TO	"F7"	372+81		9			164								5					
	"F7"	371+70				R+															42		TYPE VI ARROW (LEFT)
	"F7"	372+81				R+															42		TYPE VI ARROW (LEFT)
	"FA4"	277+42	TO	"FA3"	183+70		25A		1,082								47						
	"FS"	78+79	TO	"FA3"	178+40	R+	27B	172															
	"FS"	78+09	TO	"FS"	78+54	L+	39AM				45											48	GREEN BIKE LANE MARKING
	"FS"	78+54	TO	"FS"	82+19	L+	39	359														2,257	GREEN BIKE LANE MARKING
	"FS"	78+78				L+															11		BIKE LANE MARKING Mod
	"FS"	77+95	TO	"FS"	78+64		40					70											
	"FS"	78+64					LL							28									
	"FS"	78+21	TO	"FS"	78+79	R+	25A		59								4						
	"FS"	78+41	TO	"FS"	78+79	R+															27		6" CHEVRON MARKINGS
	"FS"	78+64	TO	"FS"	82+19		9			355								9					
	"FS"	78+75				L+															31		TYPE I ARROW (24′)
	"FS"	78+75				R+															31		TYPE I ARROW (24′)
	"FA3"	177+14				R+															42		TYPE III ARROW (LEFT)
	"FS"	81+16	TO	"FS"	82+19	R+	25A		107								6						
	"FS"	82+19	TO	"FS"	82+29		LL							72									
	"FS"	82+29	TO	"FS"	82+65	L+	39	34														101	GREEN BIKE LANE MARKING
	"FS"	82+35				L+															11		BIKE LANE MARKING Mod
	"FS"	82+29	TO	"FS"	82+74		9			53								3					
	"FS"	82+29	TO	"FS"	82+98	R+	25A		72								4						
SUBTOTAL OF PDQ-4								1,900	2,024	842	45	70		152		13	70	24			649	4,098	

PAVEMENT DELINEATION QUANTITIES
PDQ-4

R.L.	02/15/22	LAST REVISION 00-00-00	DATE PLOTTED => 2/9/2022
REVISED BY	DATE REVISED		TIME PLOTTED => 5:27:44 PM
RALEIGH LANGSTON	CARL GIBSON III		
CALCULATED-DESIGNED BY	CHECKED BY		
CONSULTANT FUNCTIONAL SUPERVISOR	CARL GIBSON III		

STATE OF CALIFORNIA - DEPARTMENT OF TRANSPORTATION

Caltrans

X:\SR 37_FAIRGROUNDS DRIVE\000_CAD\Sheets\026-Pave_Delin\NC-Quantities\044A4414nc004.dgn

Dist	COUNTY	ROUTE	POST MILES TOTAL PROJECT	SHEET No.	TOTAL SHEETS
04	Sol	37	10.9	782	

REGISTERED CIVIL ENGINEER DATE

PLANS APPROVAL DATE

REGISTERED PROFESSIONAL ENGINEER No. Exp. CIVIL STATE OF CALIFORNIA

THE STATE OF CALIFORNIA OR ITS OFFICERS OR AGENTS SHALL NOT BE RESPONSIBLE FOR THE ACCURACY OR COMPLETENESS OF SCANNED COPIES OF THIS PLAN SHEET.

WMH CORPORATION
11070 WHITE ROCK RD
SUITE 140
RANCHO CORDOVA
CA 95670

SOLANO TRANSPORATION AUTHORITY
1 HARBOR CENTER
SUITE 130
SUISUN CITY, CA 94585

PRELIMINARY PLANS SUBJECT TO REVISION

PAVEMENT DELINEATION QUANTITIES

SHEET No.	LOCATION/STATION					DIRECTION	DETAIL No.	THERMOPLASTIC TRAFFIC STRIPE (ENHANCED WET NIGHT VISIBILITY) 6" WHITE SOLID	6" YELLOW SOLID	6" WHITE BROKEN 17-7	6" WHITE BROKEN 8-4	6" WHITE BROKEN 6-1	8" WHITE SOLID	12" WHITE SOLID	PAVEMENT MARKER TYPE C	PAVEMENT MARKER TYPE D	PAVEMENT MARKER TYPE RY	PAVEMENT MARKER TYPE G	OBJECT MARKER TYPE P	DELINEATOR (CLASS 1) TYPE F	THERMOPLASTIC PAVEMENT MARKINGS (ENHANCED WET NIGHT VISIBILITY) WHITE	GREEN	DESCRIPTION
								LF							EA						SQFT		
PD-3	"FS"	82+35				Lt															31		TYPE I ARROW (24')
	"FS"	82+35				Rt															31		TYPE I ARROW (24')
	"FS"	80+55	TO	"FA4"	275+40	Lt	40					46											
	"FA4"	275+40	TO	"FA4"	275+49	Lt	38A						12										
	"FA4"	275+49	TO	"FA4"	277+42	Lt	9			212								6					
	"FA4"	275+49	TO	"FA4"	276+37	Lt	27B	127															
	"FA4"	275+40	TO	"FA4"	275+49	Lt	LL							36									
	"FA4"	275+47				Lt															42		TYPE III ARROW (LEFT)
	"FA4"	275+54				Lt															42		TYPE III ARROW (LEFT)
	"FA4"	276+05				Lt															42		TYPE III ARROW (LEFT)
	"FA4"	276+05				Lt															42		TYPE III ARROW (LEFT)
	"FA4"	275+95	TO	"FA4"	276+37	Lt															42		6" CHEVRON MARKINGS
	"FA4"	277+23				Lt															42		TYPE III ARROW (LEFT)
	"FA4"	277+23				Lt															73		TYPE III ARROW (BOTH)
	"FA4"	277+23				Lt															42		TYPE III ARROW (RIGHT)
	"F8"	483+03	TO	"F8"	480+76		25A		228								11						
	"FA4"	277+42	TO	"F8"	480+76	Lt	9			327								8					
	"FA4"	277+42	TO	"F8"	480+76	Lt	27B	318															
	"F8"	482+71				Lt															42		TYPE III ARROW (RIGHT)
	"F8"	482+71				Lt															42		TYPE III ARROW (RIGHT)
	"F8"	481+56				Lt															42		TYPE III ARROW (RIGHT)
	"F8"	481+56				Lt															42		TYPE III ARROW (RIGHT)
	"F8"	481+46				Lt	LL							24									
	"F8"	480+76	TO	"F8"	480+66		LL							68									
	"F8"	480+66	TO	"F8"	480+31		25A		35								3						
	"F8"	480+66	TO	"FN"	69+30	Lt	9			125								4					
	"F8"	480+66	TO	"FN"	69+20	Lt	27B	96															
	"FN"	62+73	TO	"FN"	63+41		40					68											
	"FN"	63+15	TO	"FN"	63+59	Rt	39AM				44											60	GREEN BIKE LANE MARKING
	"FN"	63+24	TO	"FN"	63+94	Lt	25A		73								5						
	"FN"	63+41	TO	"FN"	63+94		9			54								3					
	"FN"	63+59	TO	"FN"	63+94	Rt	39	35															
	"FN"	63+93				Rt															11		BIKE LANE MARKING Mod
	"FN"	63+84				Lt															31		TYPE I ARROW (24')
	"FN"	63+84				Rt															31		TYPE I ARROW (24')
	"FN"	63+94	TO	"FN"	64+04		LL							74									
	"FN"	64+04	TO	"FN"	64+15	Lt	25A		12								2						
	"FA2"	276+57	TO	"FN"	64+60	Rt	40					57											
	"FN"	64+04	TO	"FN"	67+37		9			333								8					
	"FN"	64+04	TO	"FN"	67+37	Rt	39	323														1,923	GREEN BIKE LANE MARKING
	"FN"	64+60	TO	"FA1"	171+00	Lt	25A		440								20						
	"FN"	66+85	TO	"FN"	67+37	Lt	25A		55								4						
SUBTOTAL OF PDQ-5								899	843	1,051	44	171	12	202			45	29			670	1,983	

PAVEMENT DELINEATION QUANTITIES
PDQ-5

R.L.	02/15/22		
REVISED BY	DATE REVISED		
RALEIGH LANGSTON	CARL GIBSON III	CARL GIBSON III	
CALCULATED-DESIGNED BY	CHECKED BY		
SUPERVISOR			

CONSULTANT FUNCTIONAL SUPERVISOR

STATE OF CALIFORNIA - DEPARTMENT OF TRANSPORTATION

Caltrans

X:\SR 37_FAIRGROUNDS DRIVE\000_CAD\Sheets\026-Pave_Delin\NC-Quantities\044A4414nc005.dgn

LAST REVISION 00-00-00 | DATE PLOTTED => 2/9/2022 TIME PLOTTED => 5:27:46 PM

Dist	COUNTY	ROUTE	POST MILES TOTAL PROJECT	SHEET No.	TOTAL SHEETS
04	Sol	37	10.9	782	

REGISTERED CIVIL ENGINEER DATE

PLANS APPROVAL DATE

REGISTERED PROFESSIONAL ENGINEER No. Exp. CIVIL STATE OF CALIFORNIA

THE STATE OF CALIFORNIA OR ITS OFFICERS OR AGENTS SHALL NOT BE RESPONSIBLE FOR THE ACCURACY OR COMPLETENESS OF SCANNED COPIES OF THIS PLAN SHEET.

WMH CORPORATION
11070 WHITE ROCK RD
SUITE 140
RANCHO CORDOVA
CA 95670

SOLANO TRANSPORATION AUTHORITY
1 HARBOR CENTER
SUITE 130
SUISUN CITY, CA 94585

PRELIMINARY PLANS SUBJECT TO REVISION

PAVEMENT DELINEATION QUANTITIES

SHEET No.	LOCATION/STATION					DIRECTION	DETAIL No.	THERMOPLASTIC TRAFFIC STRIPE (ENHANCED WET NIGHT VISIBILITY) 6" WHITE SOLID	6" YELLOW SOLID	6" WHITE BROKEN 17-7	6" WHITE BROKEN 8-4	6" WHITE BROKEN 6-1	8" WHITE SOLID	12" WHITE SOLID	PAVEMENT MARKER TYPE C	PAVEMENT MARKER TYPE D	PAVEMENT MARKER TYPE RY	PAVEMENT MARKER TYPE G	OBJECT MARKER TYPE P	DELINEATOR (CLASS 1) TYPE F	THERMOPLASTIC PAVEMENT MARKINGS (ENHANCED WET NIGHT VISIBILITY) WHITE	GREEN	DESCRIPTION
								LF							EA						SQFT		
	"FN"	66+85	TO	"FN"	67+23	L+															15		6" CHEVRON MARKINGS
	"FN"	67+30				L+															31		TYPE I ARROW (24')
	"FN"	67+30				R+															31		TYPE I ARROW (24')
	"FN"	67+30				R+															11		BIKE LANE MARKING Mod
	"FN"	67+37	TO	"FN"	67+47		LL							72									
	"FN"	67+47	TO	"FN"	68+16	L+	25A		69								4						
	"FN"	67+47	TO	"FN"	68+40		40					93											
	"FN"	67+47	TO	"FN"	67+79	R+	39	33															
	"FA1"	173+27	TO	"FA1"	172+51	L+	27B	86															
	"FA1"	173+13				L+															42		TYPE III ARROW (LEFT)
	"F5"	372+44	TO	"F5"	373+15		25A		71								4						
	"FA1"	171+00	TO	"F5"	373+15	L+	27B	207															
	"F5"	372+56				L+															24		YIELD LINE
	"F5"	373+15	TO	"F5"	373+25		LL							48									
	"F5"	373+25	TO	"F5"	375+13	L+	27B	181															
	"F5"	373+25	TO	"F5"	374+48		25A		123								7						
	"F5"	373+94				L+	LL							12									
	"F5"	374+21				L+															42		TYPE III ARROW (RIGHT)
	"FN"	65+50																				90	"CALIFORNIA 37" SHIELD
	"FS"	81+50																			90		"INTERSTATE 80" SHIELD
	"FS"	86+50																			90		"INTERSTATE 80" SHIELD
	"FS"	86+50																				90	"CALIFORNIA 37" SHIELD
PD-3	"FS"	82+65	TO	"FS"	83+11	L+	39AM				46											72	GREEN BIKE LANE MARKING
	"FS"	82+82	TO	"FS"	83+50		40					68											
	"FS"	83+11	TO	"FS"	84+10	L+	39	100														622	GREEN BIKE LANE MARKING
	"FS"	83+50					LL							24									
	"FS"	83+40	TO	"FS"	88+17	R+	29		944							21							
	"FS"	83+50	TO	"FS"	88+17		9			474								11					
	"FS"	83+59				L+															11		BIKE LANE MARKING Mod
	"FS"	83+59				L+															31		TYPE I ARROW (24')
	"FS"	83+59				R+															31		TYPE I ARROW (24')
	"FS"	84+10	TO	"FS"	85+53	L+	39AM				143											288	GREEN BIKE LANE MARKING
	"FS"	85+53	TO	"FS"	88+17	L+	39	265														1,590	GREEN BIKE LANE MARKING
	"FS"	86+32				L+															11		BIKE LANE MARKING Mod
	"FN"	67+79	TO	"FN"	68+23	R+	39AM				44											72	GREEN BIKE LANE MARKING
	"FN"	68+23	TO	"FN"	68+54	R+	39	32														180	GREEN BIKE LANE MARKING
	"FN"	68+36				R+															11		BIKE LANE MARKING Mod
	"FN"	68+57				R+															31		TYPE I ARROW (24')
	"FN"	68+74				L+															31		TYPE I ARROW (24')
	"FN"	68+53	TO	"FN"	73+32	L+	29		950							21							
	"FN"	68+40	TO	"FN"	73+32		9			893								20					
	"FN"	69+20	TO	"FN"	73+32	R+	39	412														1,581	GREEN BIKE LANE MARKING
	"FN"	69+48				R+															11		BIKE LANE MARKING Mod
	"FN"	61+61	TO	"FA3"	181+00														1	18			MARKERS FOR MGS
	"FA4"	276+18	TO	"FA4"	276+93														1	3			MARKERS FOR MGS
	"FA2"	274+78	TO	"FA2"	275+53														1	3			MARKERS FOR MGS
SUBTOTAL OF PDQ-6								1,316	2,157	1,367	233	161		156		42	15	31	3	24	544	4,585	
SUBTOTAL OF PDQ-5								899	843	1,051	44	171	12	202			45	29			670	1,983	
SUBTOTAL OF PDQ-4								1,900	2,024	842	45	70		152		13	70	24			649	4,098	
SUBTOTAL OF PDQ-3								596	1,584	291			1,121	639	21	13	39	8			892	2,562	
SUBTOTAL OF PDQ-2								2,074	1,510	3,192	209		819	58			66	71			573	6,640	
SUBTOTAL OF PDQ-1								2,815	1,725	2,174	362	533	174	563			76	50			625	7,044	
GRAND TOTAL								9,600	9,843	8,917	893	935	2,126	1,770	21	68	311	213	3	24	3,953	26,912	

PAVEMENT DELINEATION QUANTITIES

PDQ-6

R.L.	02/15/22	REVISED BY	DATE REVISED
RALEIGH LANGSTON	CARL GIBSON III	CALCULATED-DESIGNED BY	CHECKED BY
CARL GIBSON III	CONSULTANT FUNCTIONAL SUPERVISOR		

STATE OF CALIFORNIA - DEPARTMENT OF TRANSPORTATION

X:\SR 37_FAIRGROUNDS DRIVE\000_CAD\Sheets\026-Pave_Delin\NC-Quantities\044A4414nc006.dgn

LAST REVISION 00-00-00 | DATE PLOTTED => 2/9/2022 | TIME PLOTTED => 5:27:48 PM

Dist	COUNTY	ROUTE	POST MILES TOTAL PROJECT	SHEET No.	TOTAL SHEETS
04	Sol	37	10.9		

REGISTERED CIVIL ENGINEER DATE

PLANS APPROVAL DATE

REGISTERED PROFESSIONAL ENGINEER No. Exp. CIVIL STATE OF CALIFORNIA

THE STATE OF CALIFORNIA OR ITS OFFICERS OR AGENTS SHALL NOT BE RESPONSIBLE FOR THE ACCURACY OR COMPLETENESS OF SCANNED COPIES OF THIS PLAN SHEET.

WMH CORPORATION
11070 WHITE ROCK RD
SUITE 140
RANCHO CORDOVA
CA 95670

SOLANO TRANSPORTATION AUTHORITY
1 HARBOR CENTER
SUITE 130
SUISUN CITY, CA 94585

PRELIMINARY PLANS SUBJECT TO REVISION

NOTES:

1. FOR ACCURATE RIGHT OF WAY DATA, CONTACT RIGHT OF WAY ENGINEERING AT THE DISTRICT OFFICE.
2. EXACT LOCATION OF ROADSIDE SIGNS TO BE DETERMINED BY THE ENGINEER.
3. FOR ROADSIDE SIGN INSTALLATION DETAILS, REFER TO STANDARD PLANS RS1 TO RS4.
4. FEDERAL SIGN CODES ARE SHOWN UNLESS DESIGNATED BY <CA> WHICH INDICATES CALIFORNIA SIGN CODE.

LEGEND:

- ● REMOVE ROADSIDE SIGN
- ✳ EXISTING ROADSIDE SIGN TO REMAIN
- ■ INSTALL ROADSIDE SIGN ON POLE
- ⋈ INSTALL ROADSIDE SIGN ON MAST ARM
- ▲ RELOCATE ROADSIDE SIGN
- RELOCATE ROADSIDE SIGN
- TYPE 1 PEDESTRIAN BARRICADE

ABBREVIATIONS:

BMS	BARRIER MOUNTED SIGN
FNBT	FACING NORTHBOUND TRAFFIC
FSBT	FACING SOUTHBOUND TRAFFIC

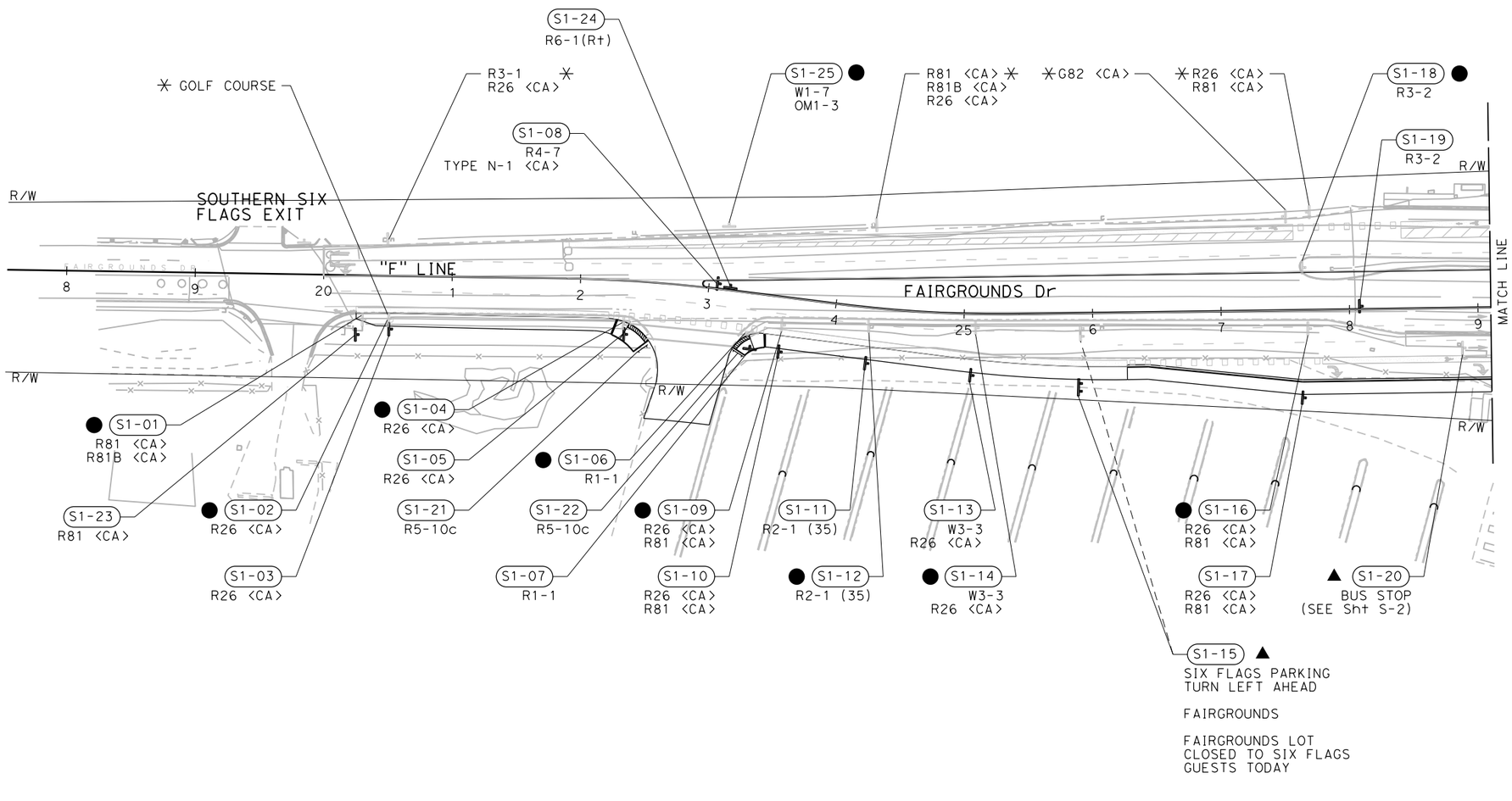

APPROVED FOR SIGN WORK ONLY

SIGN PLAN

SCALE: 1" = 50'

S-1

R.L.	02/15/22	RALEIGH LANGSTON	CARL GIBSON III
REVISED BY	DATE REVISED	CALCULATED-DESIGNED BY	CHECKED BY
CONSULTANT FUNCTIONAL SUPERVISOR	CARL GIBSON III		

STATE OF CALIFORNIA - DEPARTMENT OF TRANSPORTATION

Caltrans

X:\SR 37_FAIRGROUNDS DRIVE\000_CAD\Sheets\027-Signs\0A-Plans\044A4414oa001.dgn

LAST REVISION 00-00-00 | DATE PLOTTED => 9/2/2022 | TIME PLOTTED => 1:23:30 PM

Dist	COUNTY	ROUTE	POST MILES TOTAL PROJECT	SHEET No.	TOTAL SHEETS
04	Sol	37	10.9		

REGISTERED CIVIL ENGINEER DATE

PLANS APPROVAL DATE

REGISTERED PROFESSIONAL ENGINEER No. Exp. CIVIL STATE OF CALIFORNIA

THE STATE OF CALIFORNIA OR ITS OFFICERS OR AGENTS SHALL NOT BE RESPONSIBLE FOR THE ACCURACY OR COMPLETENESS OF SCANNED COPIES OF THIS PLAN SHEET.

WMH CORPORATION
11070 WHITE ROCK RD
SUITE 140
RANCHO CORDOVA
CA 95670

SOLANO TRANSPORTATION AUTHORITY
1 HARBOR CENTER
SUITE 130
SUISUN CITY, CA 94585

PRELIMINARY PLANS SUBJECT TO REVISION

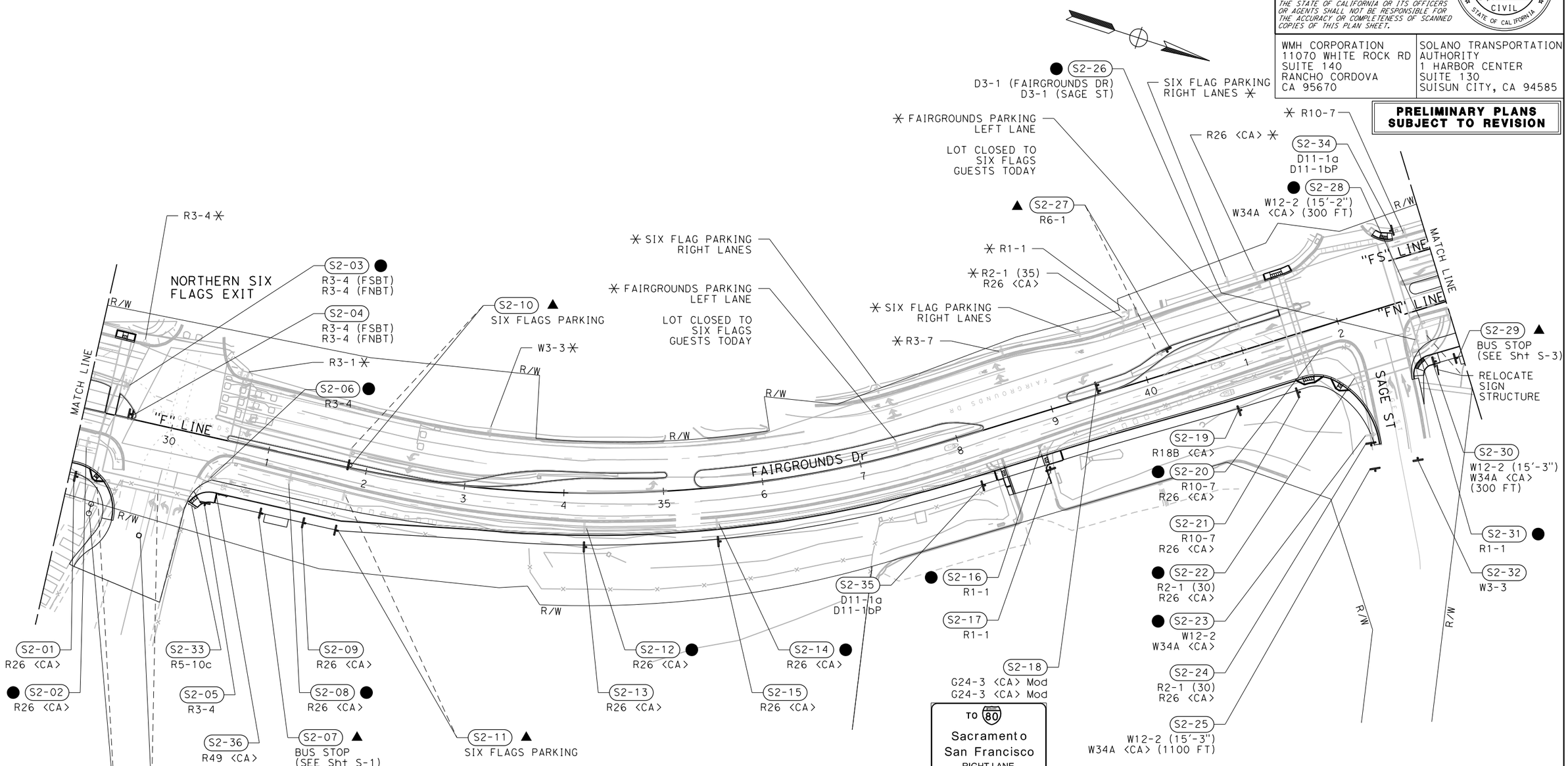

APPROVED FOR SIGN WORK ONLY

SIGN PLAN

SCALE: 1" = 50'

S-2

REVISED BY	DATE REVISED
R.L.	02/15/22

RALEIGH LANGSTON — CARL GIBSON III

CALCULATED-DESIGNED BY — CHECKED BY

CARL GIBSON III — CONSULTANT FUNCTIONAL SUPERVISOR

STATE OF CALIFORNIA - DEPARTMENT OF TRANSPORTATION

Caltrans

X:\SR 37_FAIRGROUNDS DRIVE\000_CAD\Sheets\027-Signs\0A-Plans\044A4414oa002.dgn

LAST REVISION 00-00-00 | DATE PLOTTED => 9/2/2022 | TIME PLOTTED => 1:24:49 PM

BORDER LAST REVISED 7/2/2010 | USERNAME => jvaldivia | DGN FILE => 044A4414oa002.dgn | RELATIVE BORDER SCALE IS IN INCHES 0 1 2 3 | UNIT 0738 | PROJECT NUMBER & PHASE 04000205841

Dist	COUNTY	ROUTE	POST MILES TOTAL PROJECT	SHEET No.	TOTAL SHEETS
04	Sol	37	10.9		

REGISTERED CIVIL ENGINEER DATE

PLANS APPROVAL DATE

REGISTERED PROFESSIONAL ENGINEER No. Exp. CIVIL STATE OF CALIFORNIA

THE STATE OF CALIFORNIA OR ITS OFFICERS OR AGENTS SHALL NOT BE RESPONSIBLE FOR THE ACCURACY OR COMPLETENESS OF SCANNED COPIES OF THIS PLAN SHEET.

WMH CORPORATION
11070 WHITE ROCK RD
SUITE 140
RANCHO CORDOVA
CA 95670

SOLANO TRANSPORTATION AUTHORITY
1 HARBOR CENTER
SUITE 130
SUISUN CITY, CA 94585

PRELIMINARY PLANS SUBJECT TO REVISION

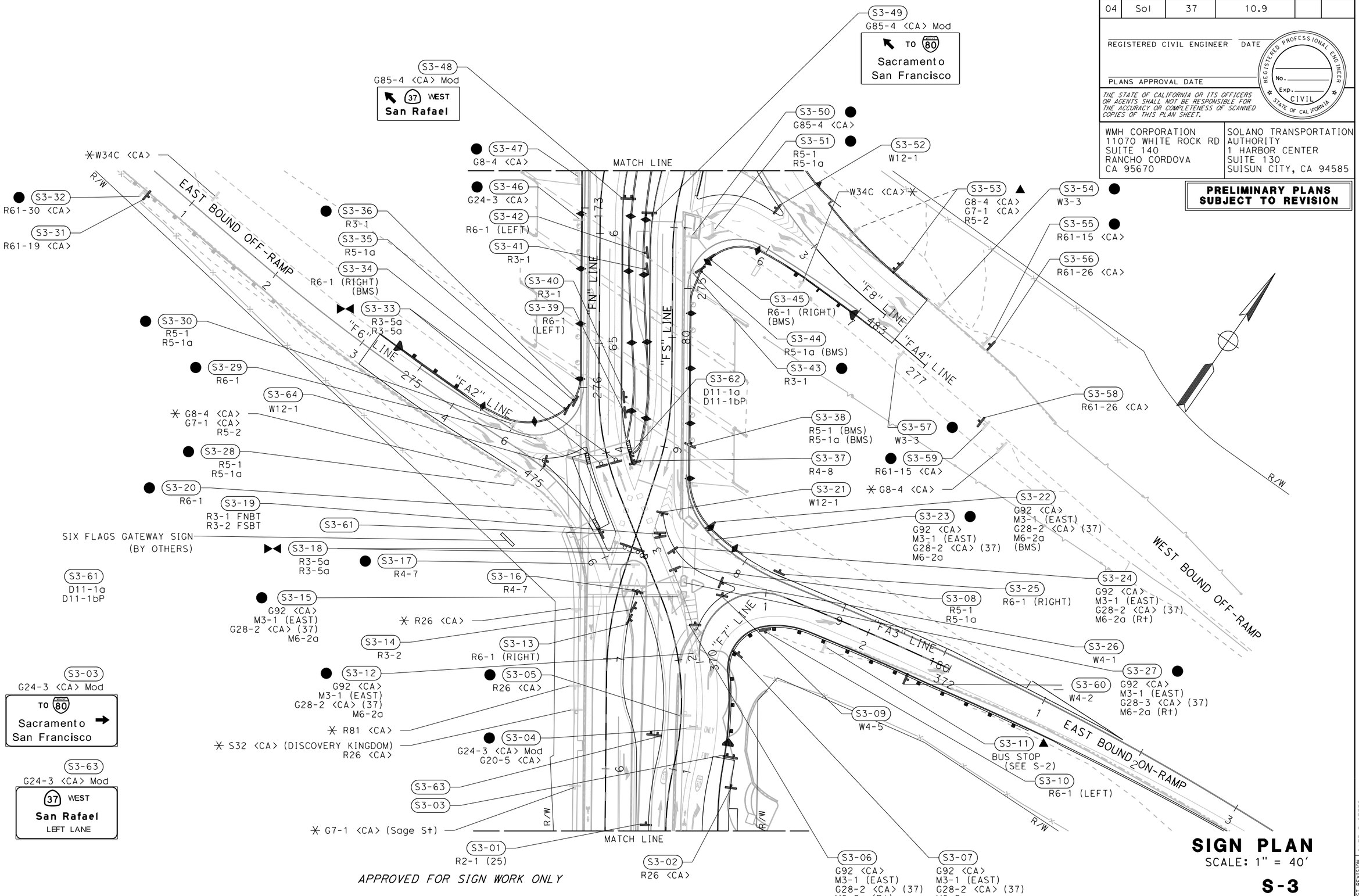

APPROVED FOR SIGN WORK ONLY

SIGN PLAN

SCALE: 1" = 40'

S-3

R.L.	02/15/22	REVISED BY	DATE REVISED
RALEIGH LANGSTON	CARL GIBSON III	CALCULATED-DESIGNED BY	CHECKED BY
CARL GIBSON III		CONSULTANT FUNCTIONAL SUPERVISOR	

STATE OF CALIFORNIA - DEPARTMENT OF TRANSPORTATION

Caltrans

X:\SR 37_FAIRGROUNDS DRIVE\000_CAD\Sheets\027-Signs\0A-Plans\044A4414oa003.dgn

LAST REVISION 00-00-00 | DATE PLOTTED => 9/2/2022 | TIME PLOTTED => 1:25:35 PM

BORDER LAST REVISED 7/2/2010 | USERNAME => jvaldivia | DGN FILE => 044A4414oa003.dgn | RELATIVE BORDER SCALE IS IN INCHES 0 1 2 3 | UNIT 0738 | PROJECT NUMBER & PHASE 04000205841

Dist	COUNTY	ROUTE	POST MILES TOTAL PROJECT	SHEET No.	TOTAL SHEETS
04	Sol	37	10.9		

REGISTERED CIVIL ENGINEER DATE

PLANS APPROVAL DATE

REGISTERED PROFESSIONAL ENGINEER No. Exp. CIVIL STATE OF CALIFORNIA

THE STATE OF CALIFORNIA OR ITS OFFICERS OR AGENTS SHALL NOT BE RESPONSIBLE FOR THE ACCURACY OR COMPLETENESS OF SCANNED COPIES OF THIS PLAN SHEET.

WMH CORPORATION
11070 WHITE ROCK RD
SUITE 140
RANCHO CORDOVA
CA 95670

SOLANO TRANSPORTATION AUTHORITY
1 HARBOR CENTER
SUITE 130
SUISUN CITY, CA 94585

PRELIMINARY PLANS SUBJECT TO REVISION

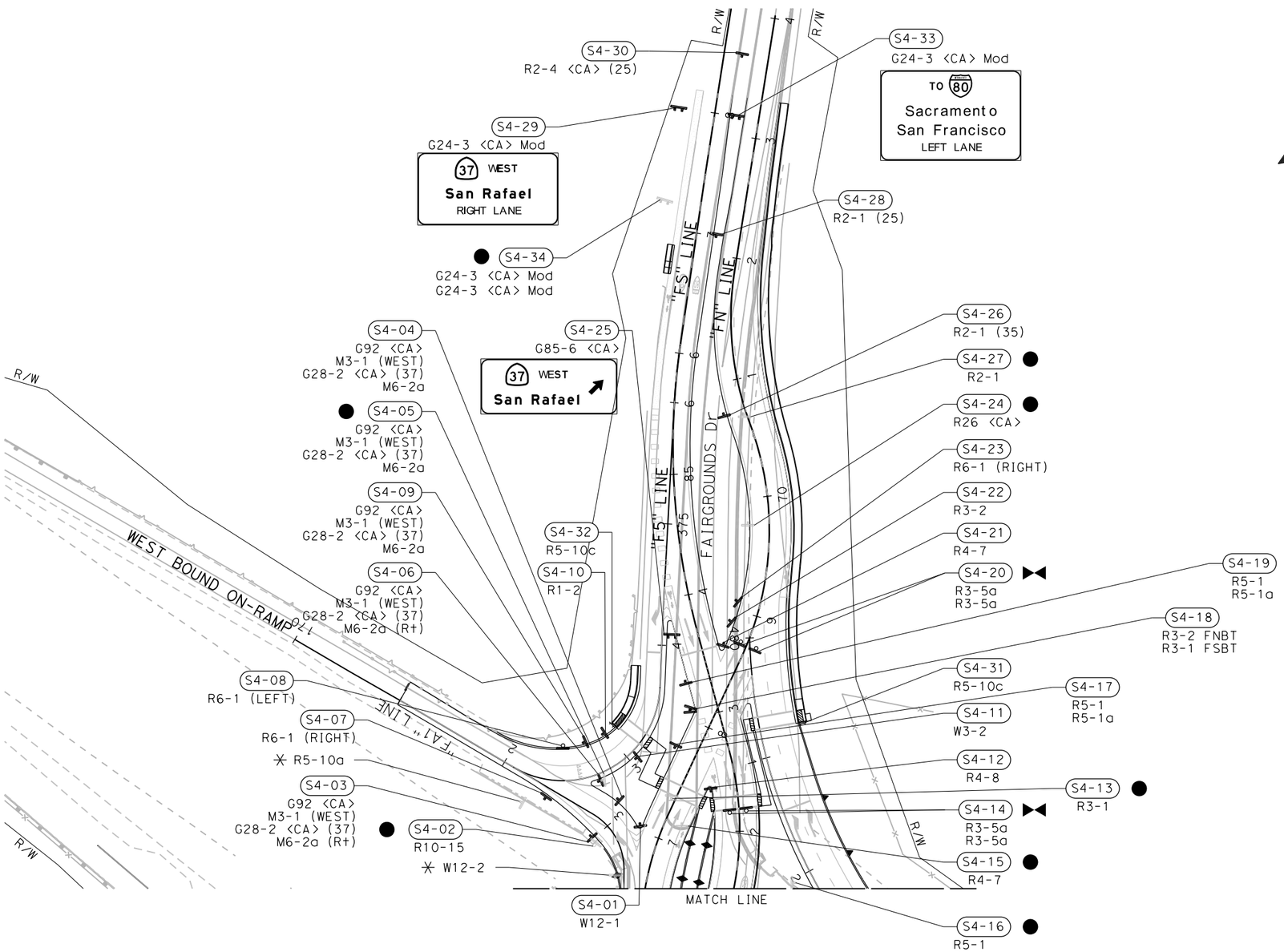

APPROVED FOR SIGN WORK ONLY

SIGN PLAN

SCALE: 1" = 50'

S-4

R.L.	02/15/22		
REVISED BY	DATE REVISED		
RALEIGH LANGSTON	CARL GIBSON III		
CALCULATED-DESIGNED BY	CHECKED BY		
CARL GIBSON III			
CONSULTANT FUNCTIONAL SUPERVISOR			

STATE OF CALIFORNIA - DEPARTMENT OF TRANSPORTATION

Caltrans

X:\SR 37_FAIRGROUNDS DRIVE\000_CAD\Sheets\027-Signs\0A-Plans\044A4414oa004.dgn

LAST REVISION 00-00-00 | DATE PLOTTED => 9/2/2022 | TIME PLOTTED => 1:25:59 PM

BORDER LAST REVISED 7/2/2010 | USERNAME => jvaldivia | DGN FILE => 044A4414oa004.dgn | RELATIVE BORDER SCALE IS IN INCHES 0 1 2 3 | UNIT 0738 | PROJECT NUMBER & PHASE 04000205841

Dist	COUNTY	ROUTE	POST MILES TOTAL PROJECT	SHEET No.	TOTAL SHEETS
04	Sol	37	10.9		

REGISTERED CIVIL ENGINEER DATE

PLANS APPROVAL DATE

REGISTERED PROFESSIONAL ENGINEER No. Exp. CIVIL STATE OF CALIFORNIA

THE STATE OF CALIFORNIA OR ITS OFFICERS OR AGENTS SHALL NOT BE RESPONSIBLE FOR THE ACCURACY OR COMPLETENESS OF SCANNED COPIES OF THIS PLAN SHEET.

WMH CORPORATION
11070 WHITE ROCK RD
SUITE 140
RANCHO CORDOVA
CA 95670

SOLANO TRANSPORATION AUTHORITY
1 HARBOR CENTER
SUITE 130
SUISUN CITY, CA 94585

PRELIMINARY PLANS SUBJECT TO REVISION

G24-3 (CA) Mod

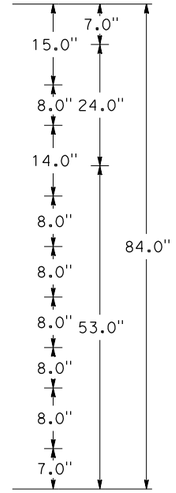

12.0" RADIUS, 2.0" BORDER, WHITE ON GREEN
"TO" E;
"SACRAMENTO" E Mod;
"SAN FRANCISCO" E Mod;

S2-18

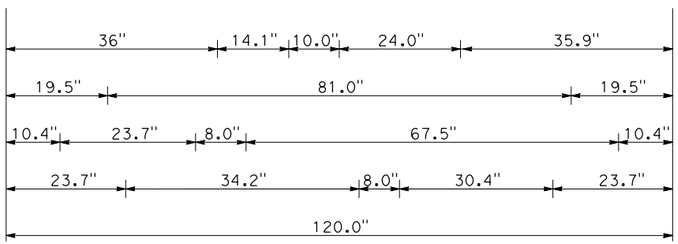

G24-3 (CA) Mod

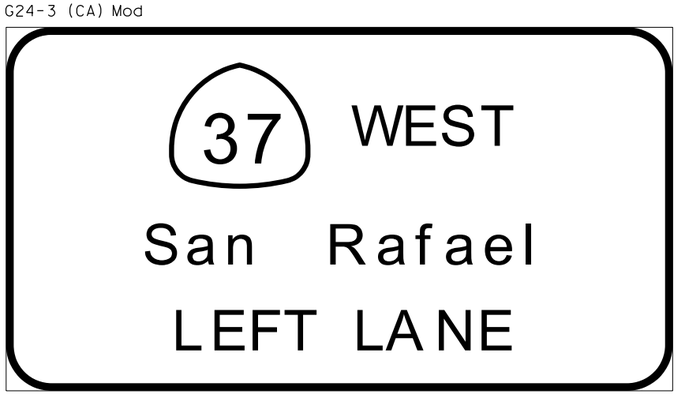

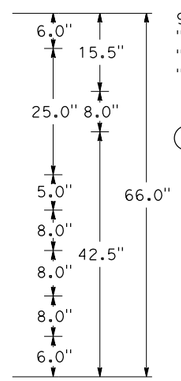

9.0" RADIUS, 1.5" BORDER, WHITE ON GREEN
"WEST" E;
"SAN RAFAEL" E Mod;
"LEFT LANE" E;

S2-18 S3-63

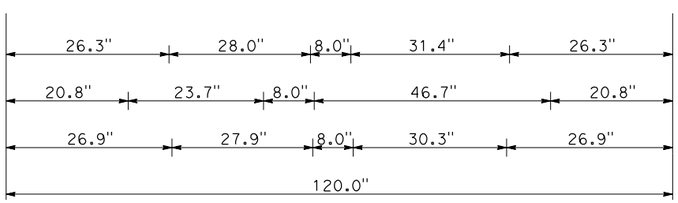

G24-3 (CA) Mod

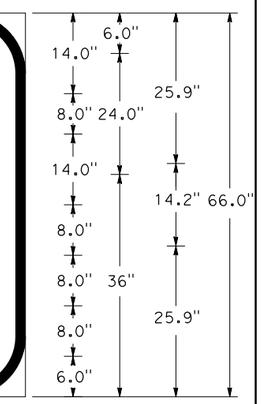

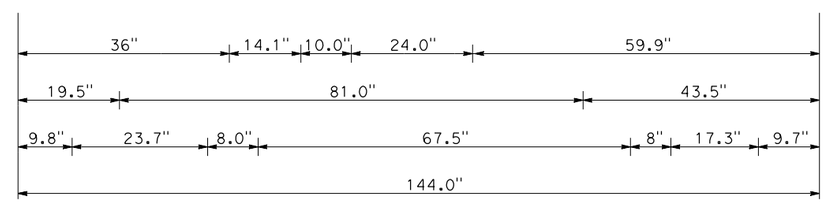

12.0" RADIUS, 2.0" BORDER, WHITE ON GREEN
"TO" E; STANDARD ARROW CUSTOM 17.3" X 14.3" 0°;
"SACRAMENTO" E Mod;
"SAN FRANCISCO" E Mod;

S3-03

SIGN DETAILS

NO SCALE

SD-1

R.L.	02/15/22
REVISED BY	DATE REVISED
RALEIGH LANGSTON	CARL GIBSON III
CALCULATED-DESIGNED BY	CHECKED BY
CARL GIBSON III	
CONSULTANT FUNCTIONAL SUPERVISOR	

STATE OF CALIFORNIA - DEPARTMENT OF TRANSPORTATION

Caltrans

X:\SR 37_FAIRGROUNDS DRIVE\000_CAD\Sheets\027-Signs\08-Details\044A4414ob001.dgn

LAST REVISION 00-00-00 | DATE PLOTTED => 2/16/2022 | TIME PLOTTED => 4:35:40 PM

Dist	COUNTY	ROUTE	POST MILES TOTAL PROJECT	SHEET No.	TOTAL SHEETS
04	Sol	37	10.9		

REGISTERED CIVIL ENGINEER DATE

PLANS APPROVAL DATE

REGISTERED PROFESSIONAL ENGINEER No. Exp. CIVIL STATE OF CALIFORNIA

THE STATE OF CALIFORNIA OR ITS OFFICERS OR AGENTS SHALL NOT BE RESPONSIBLE FOR THE ACCURACY OR COMPLETENESS OF SCANNED COPIES OF THIS PLAN SHEET.

WMH CORPORATION
11070 WHITE ROCK RD
SUITE 140
RANCHO CORDOVA
CA 95670

SOLANO TRANSPORATION AUTHORITY
1 HARBOR CENTER
SUITE 130
SUISUN CITY, CA 94585

PRELIMINARY PLANS SUBJECT TO REVISION

G85-4 (CA) Mod

12.0" RADIUS, 2.0" BORDER, WHITE ON GREEN
STANDARD DIAGONAL ARROW CUSTOM 17.3" X 14.3" 45°; "TO" E;
"SACRAMENTO" E Mod;
"SAN FRANCISCO" E Mod;

S3-49

G85-4 (CA) Mod

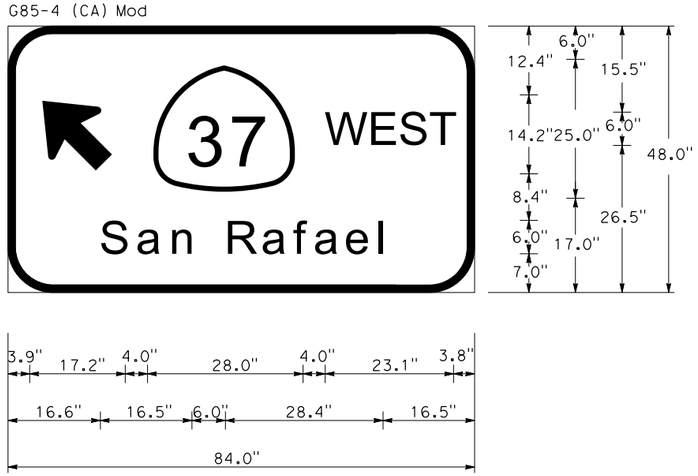

9.0" RADIUS, 1.5" BORDER, WHITE ON GREEN
STANDARD DIAGONAL ARROW CUSTOM 17.3" X 14.3" 45°; "WEST" E;
"SAN RAFAEL" E Mod;

S3-48

SIGN DETAILS

NO SCALE

SD-2

REVISED BY	R.L.	RALEIGH LANGSTON	CALCULATED-DESIGNED BY
DATE REVISED	02/15/22	CARL GIBSON III	CHECKED BY
CONSULTANT FUNCTIONAL SUPERVISOR	CARL GIBSON III		

STATE OF CALIFORNIA - DEPARTMENT OF TRANSPORTATION

Caltrans

X:\SR 37_FAIRGROUNDS DRIVE\000_CAD\Sheets\027-Signs\0B-Details\044A4414ob002.dgn

LAST REVISION 00-00-00 | DATE PLOTTED => 2/16/2022 TIME PLOTTED => 4:35:46 PM

Dist	COUNTY	ROUTE	POST MILES TOTAL PROJECT	SHEET No.	TOTAL SHEETS
04	Sol	37	10.9		

REGISTERED CIVIL ENGINEER DATE

PLANS APPROVAL DATE

REGISTERED PROFESSIONAL ENGINEER No. Exp. CIVIL STATE OF CALIFORNIA

THE STATE OF CALIFORNIA OR ITS OFFICERS OR AGENTS SHALL NOT BE RESPONSIBLE FOR THE ACCURACY OR COMPLETENESS OF SCANNED COPIES OF THIS PLAN SHEET.

WMH CORPORATION
11070 WHITE ROCK RD
SUITE 140
RANCHO CORDOVA
CA 95670

SOLANO TRANSPORATION AUTHORITY
1 HARBOR CENTER
SUITE 130
SUISUN CITY, CA 94585

PRELIMINARY PLANS SUBJECT TO REVISION

G24-3 (CA) Mod

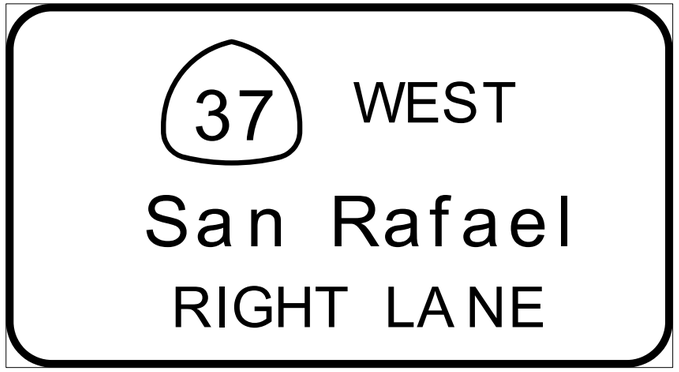

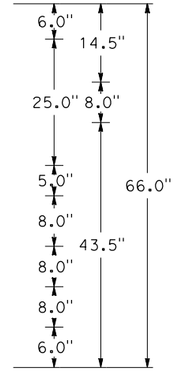

9.0" RADIUS, 1.5" BORDER, WHITE ON GREEN
"WEST" E;
"SAN RAFAEL" E Mod;
"RIGHT LANE" E;

S4-29

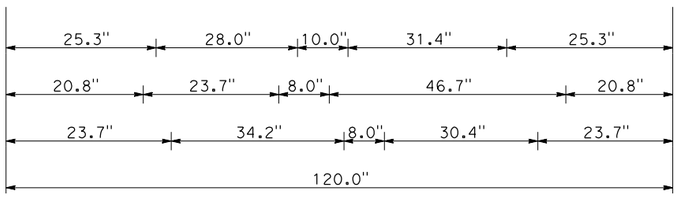

G24-3 (CA) Mod

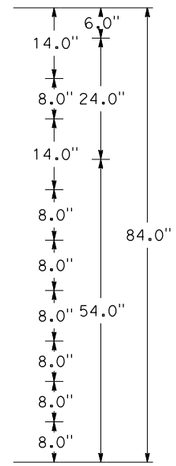

12.0" RADIUS, 2.0" BORDER, WHITE ON GREEN
"TO" E;
"SACRAMENTO" E Mod;
"SAN FRANCISCO" E Mod;
"LEFT LANE" E;

S4-33

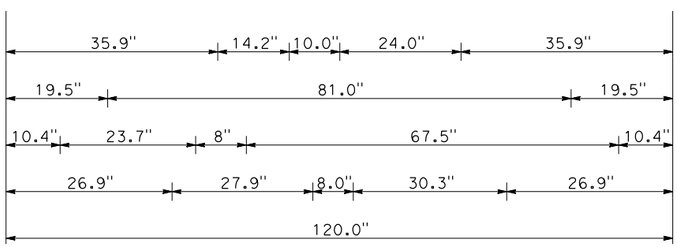

SIGN DETAILS

NO SCALE

SD-3

REVISED BY	DATE REVISED
R.L.	02/15/22

RALEIGH LANGSTON — CARL GIBSON III

CALCULATED-DESIGNED BY — CHECKED BY

CONSULTANT FUNCTIONAL SUPERVISOR — CARL GIBSON III

STATE OF CALIFORNIA - DEPARTMENT OF TRANSPORTATION

Caltrans

X:\SR 37_FAIRGROUNDS DRIVE\000_CAD\Sheets\027-Signs\0B-Details\044A4414ob003.dgn

LAST REVISION 00-00-00 | DATE PLOTTED => 2/16/2022 | TIME PLOTTED => 4:35:49 PM

Dist	COUNTY	ROUTE	POST MILES TOTAL PROJECT	SHEET No.	TOTAL SHEETS
04	Sol	37	10.9		

REGISTERED CIVIL ENGINEER DATE

PLANS APPROVAL DATE

REGISTERED PROFESSIONAL ENGINEER No. Exp. CIVIL STATE OF CALIFORNIA

THE STATE OF CALIFORNIA OR ITS OFFICERS OR AGENTS SHALL NOT BE RESPONSIBLE FOR THE ACCURACY OR COMPLETENESS OF SCANNED COPIES OF THIS PLAN SHEET.

WMH CORPORATION
11070 WHITE ROCK RD
SUITE 140
RANCHO CORDOVA
CA 95670

SOLANO TRANSPORATION
AUTHORITY
1 HARBOR CENTER
SUITE 130
SUISUN CITY, CA 94585

PRELIMINARY PLANS SUBJECT TO REVISION

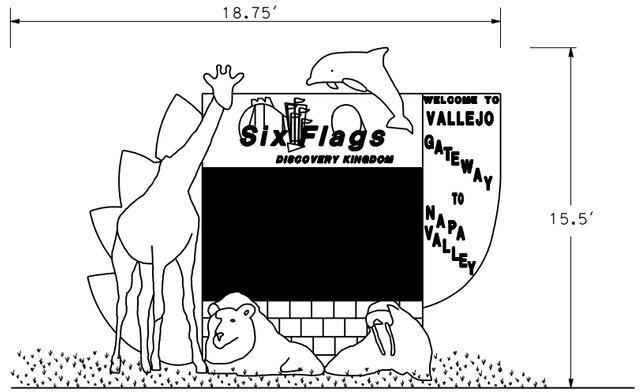

SIX FLAGS GATEWAY SIGN

G85-6 (CA) Mod

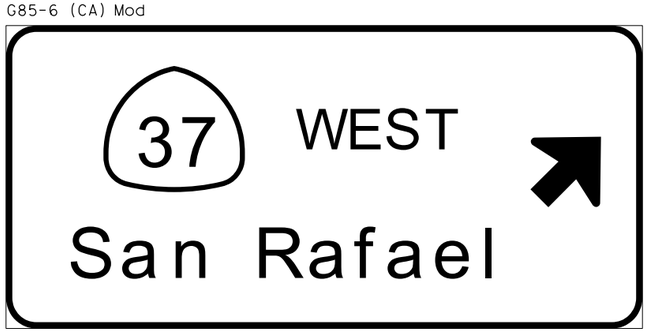

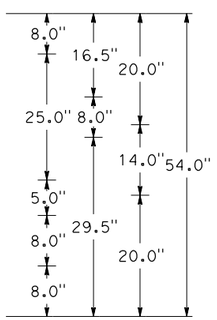

6.0" RADIUS, 1.3" BORDER, WHITE ON GREEN
"WEST" E;
"SAN RAFAEL" E Mod;
STANDARD DIAGONAL ARROW CUSTOM 17.3" X 18.8" 45°;

S4-25

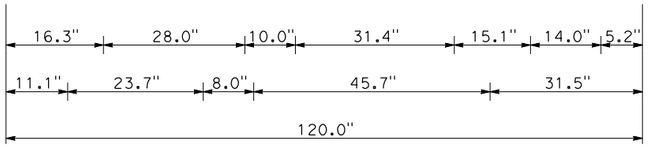

SIGN DETAILS

NO SCALE

SD-4

RALEIGH LANGSTON	REVISED BY	R.L.	
CARL GIBSON III	DATE REVISED	02/15/22	

CALCULATED-DESIGNED BY
CHECKED BY

CONSULTANT FUNCTIONAL SUPERVISOR
CARL GIBSON III

STATE OF CALIFORNIA - DEPARTMENT OF TRANSPORTATION
Caltrans

X:\SR 37_FAIRGROUNDS DRIVE\000_CAD\Sheets\027-Signs\0B-Details\044A4414ob004.dgn

LAST REVISION 00-00-00
DATE PLOTTED => 2/16/2022
TIME PLOTTED => 4:35:52 PM